WINSMITH

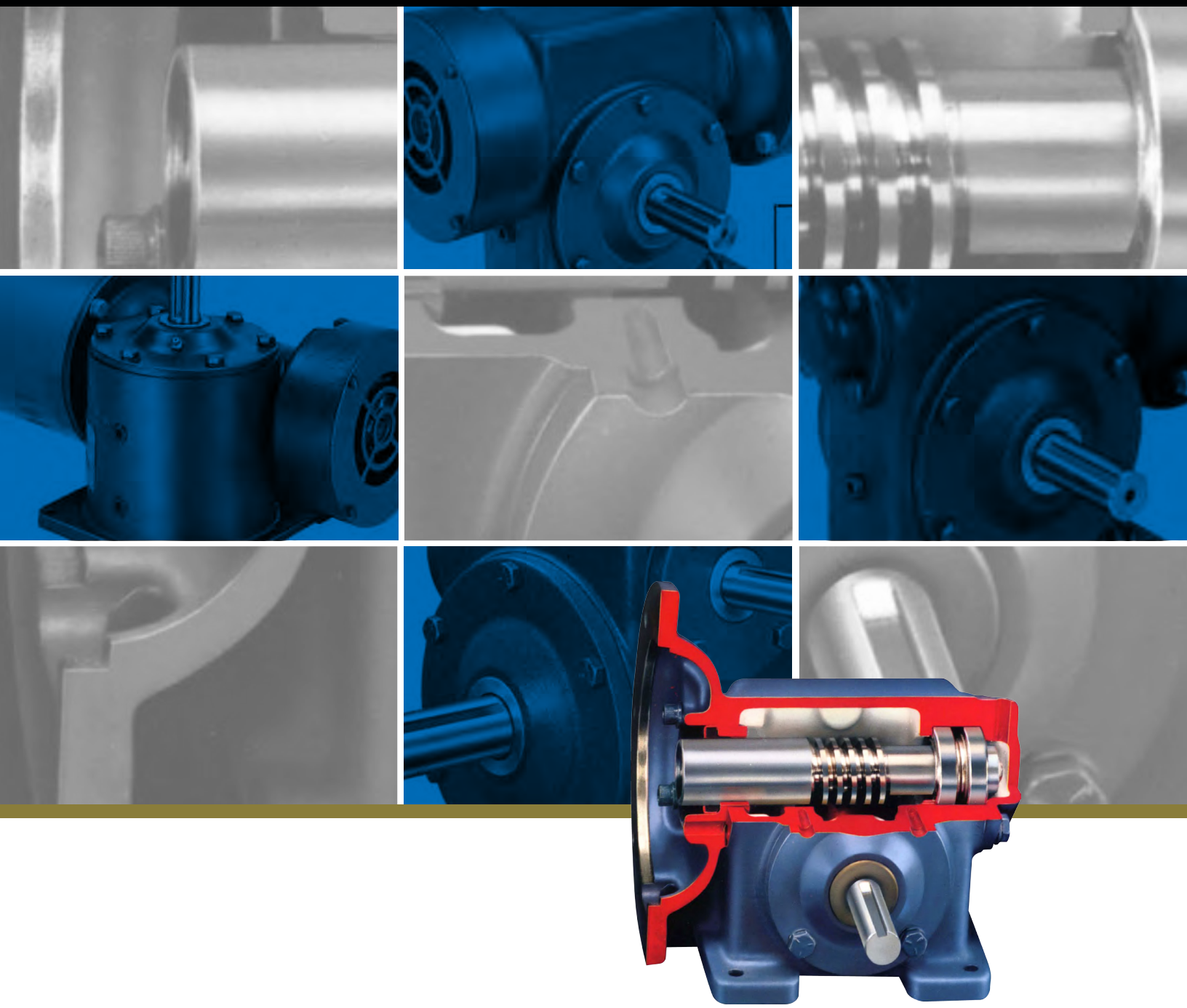

C-LINE
Worm Gear Speed Reducers

www.winsmith.com

What to look for in a Worm Gear Speed Reducer

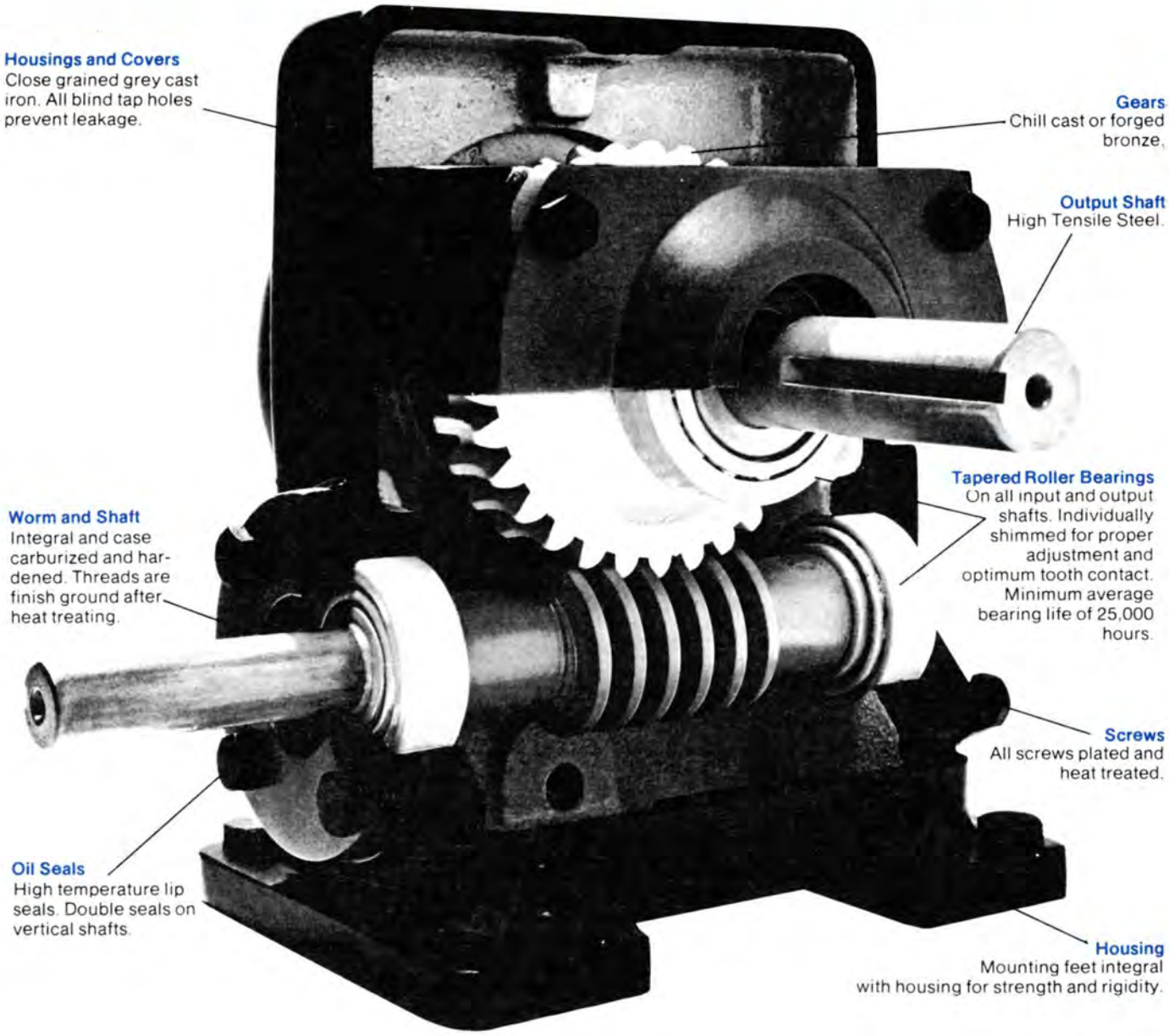

GENERAL FEATURES

- Per AGMA Standard #6034-B92
- Each unit is test run.
- All units factory filled with oil to the proper level, ready for service.
- External grease fittings allow for additional lubrication to the pre-packed bearings above the oil level.
- Fill, level and drain plugs appropriately located.
- More than 13,000,000 standard reducers are available — all of which can be customized to suit your special application.

TABLE OF CONTENTS

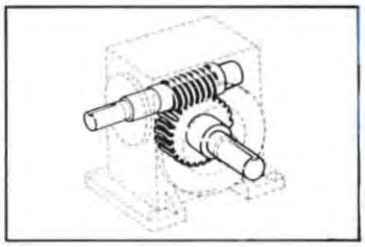

Easy Selection Guide
Pages 2-27

How to Select
Page 6

How To Order
Page 28

Single Reduction Units

Model	Page
CB	32
CT	34
CV	36
FCT	38
FCV	40
MCT-MCTW	42
MCV-MCVW	44
MFCT-MFCTW	46
MFCV-MFCVW	48
SF	50
ST	52
FSF	54
FST	56
MSF-MSFW	58
MST-MSTW	60
MFSF-MFSFW	62
MFST-MFSTW	64
L	66
ML-MLW	68

Double Reduction Units

Model	Page
CBD	72
CTD	74
CVD	76
MCTD-MCTDW	78
MCVD-MCVDW	80
CBX	82
CTX-SCTX-SFX	84
CVX-LX	86
DBI	88
SFD	90
STD-SCTX	92
MSFD-MSFDW	94
MSTD-MSTDW	96
LD-LX	98
MLD-MLDW	100

Triple Reduction Units

Model	Page
CTT-STT-SFT	104
CVT-LT	106
MCTT-MCTTW MSTT-MSFT	108
MCVT-MCVTW MLT	110

ADDITIONAL INTEGRAL FEATURES

CT1-CV1 Torque Controls	112
Custom Capabilities	114
MHCT-MHCV Hydraulic Motor Flange	116
"C" Flange Adapter Coupling Type	120

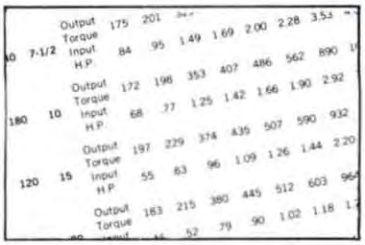

Reducer Rating Charts

Index - page 121
Single Reduction—page 122-151
Double Reduction—page 152-223
Triple Reduction—page 152-223
DBI Series—page 224-239

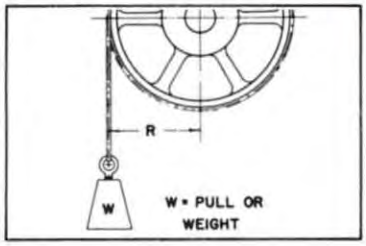

Engineering Data

Index - page 240

Terms and Conditions
Page 256

©Copyright, 1977, by Winsmith

13,000,000 STANDARD WORM GEAR SPEED REDUCERS

4 different reducer families
45 basic types
13,000,000 standard combinations

In the following pages Winsmith presents the most complete worm gear speed reducer product line available anywhere in the world. And if you don't find just what you want in this catalog, give us a call—we'll probably be able to make the reducer you're looking for.

If you aren't familiar with Winsmith we recommend that you follow pages 2 - 27 in sequence. A step-by-step selection process will lead you to the exact reducer for your application.

If you feel you know what you want go directly to the detailed product index starting on page 22.

SINGLE REDUCTION—WORM GEAR

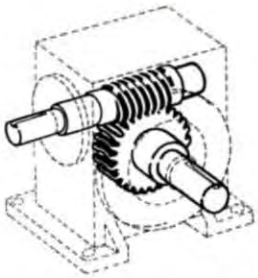

CB Page 32	CT Page 34	CV Page 36	FCT Page 38	
FCV Page 40	MCT-MCTW Page 42	MCV-MCVW* Page 44	MFCT-MFCTW* Page 46	MFCV-MFCVW* Page 48
SF Page 50	ST Page 52	FSF Page 54	FST Page 56	MSF-MSFW* Page 58	MST-MSTW* Page 60
MFSF-MFSFW* Page 62	MFST-MFSTW* Page 64	L Page 66	ML-MLW* Page 68	CT1 Page 112	MHCT-MHCV Page 116 MHCV IS NOT PICTURED

*Two designations – motorized unit with motor is pictured.

DOUBLE REDUCTION—WORM AND HELICAL GEAR

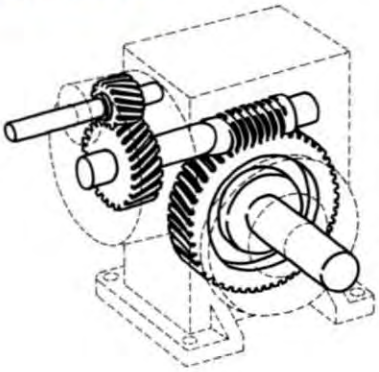

CBX Page 82	CTX Page 84	CVX Page 86
LX Pages 86 and 98	SCTX Pages 84 and 92	

DOUBLE REDUCTION—WORM GEAR

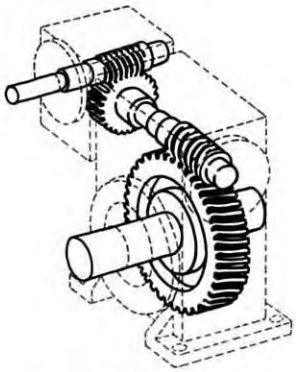

		CBD Page 72	CTD Page 74	CVD Page 76
	MCTD-MCTDW* Page 78	MCVD-MCVDW* Page 80	DBI Page 88	SFD Page 90
STD Page 92	MSFD-MSFDW* Page 94	MSTD-MSTDW* Page 96	LD Page 98	MLD-MLDW* Page 100	MCTD1 Page 112

TRIPLE REDUCTION—WORM GEAR

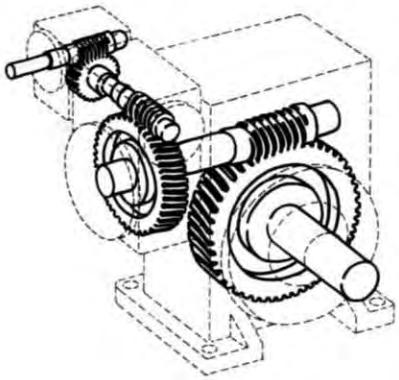

CTT Page 104	CVT Page 106	CTTM-CTTMW* Page 108	MCVT-MCVTW* Page 110
SFT Page 90	STT Page 92	MSTT Page 96	MSFT Page 94
MCTT1 Page 112			

BASIC RATINGS

SINGLE REDUCTION

"C" SERIES

WORM GEAR REDUCER*

Input Horsepower Range at 1725 RPM: .01 to 56.3
Ratio Range: 5:1 to 77:1
Max. Output Torque Range in in. lbs.: 164 to 62113

WORM GEAR REDUCER – FAN COOLED

Input Horsepower Range at 1725 RPM: .01 to 56.3
Ratio Range: 5:1 to 77:1
Max. Output Torque Range in in. lbs.: 164 to 62113

MOTORIZED (NEMA "C" FLANGE) REDUCER AND GEARMOTOR*

Input Horsepower Range at 1725 RPM: .01 to 16.89
Ratio Range: 5:1 to 77:1
Max. Output Torque Range in in. lbs.: 164 to 10576

FAN COOLED AND MOTORIZED (NEMA "C" FLANGE) REDUCER D GEARMOTOR

Input Horsepower Range at 1725 RPM: .01 to 16.89
Ratio Range: 5:1 to 77:1
Max. Output Torque Range in in. lbs.: 164 to 10576

"S" SERIES (Hollow Output Shaft)

WORM GEAR REDUCER*

Input Horsepower Range at 1725 RPM: .07 to 40.76
Ratio Range: 5:1 to 77:1
Max. Output Torque Range in in. lbs.: 420 to 28752

WORM GEAR REDUCER – FAN COOLED*

Input Horsepower Range at 1725 RPM: .07 to 40.76
Ratio Range: 5:1 to 77:1
Max. Output Torque Range in in. lbs.: 420 to 28752

MOTORIZED (NEMA "C" FLANGE) REDUCER AND GEARMOTOR*

Input Horsepower Range at 1725 RPM: .07 to 16.89
Ratio Range: 5:1 to 77:1
Max. Output Torque Range in in. lbs.: 420 to 10576

FAN COOLED AND MOTORIZED (NEMA "C" FLANGE) REDUCER AND GEARMOTOR

Input Horsepower Range at 1725 RPM: .07 to 16.89
Ratio Range: 5:1 to 77:1
Max. Output Torque Range in in. lbs.: 420 to 10576

"L" SERIES (Drop Bearing Type)

WORM GEAR REDUCER*

Input Horsepower Range at 1725 RPM: .09 to 40.76
Ratio Range: 5:1 to 77:1
Max. Output Torque Range in in. lbs.: 770 to 28752

MOTORIZED (NEMA "C" FLANGE) REDUCER AND GEARMOTOR*

Input Horsepower Range at 1725 RPM: .09 to 16.89
Ratio Range: 5:1 to 77:1
Max. Output Torque Range in in. lbs.: 770 to 10576

*Note: The energy efficient "D" line is available to replace "C" line units to 3". See section "D".

Basic ratings are presented here to help you narrow down your selection, and to make it easier to use the right size selection charts which follow immediately. You will find complete technical specifications, dimensions and ratings later on in the catalog. A complete index starts on page 24.

1

DOUBLE REDUCTION

"C" SERIES

DOUBLE WORM GEAR REDUCER*

Input Horsepower Range at 1725 RPM: .03 to 16.38
Ratio Range: 50:1 to 3600:1
Max. Output Torque Range in in. lbs.: 400 to 68631

DOUBLE WORM GEAR* MOTORIZED (NEMA "C" FLANGE) REDUCER AND GEARMOTOR

Input Horsepower Range at 1725 RPM: .03 to 16.38
Ratio Range: 50:1 to 3600:1
Max. Output Torque Range in in. lbs.: 400 to 68631

"S" SERIES (Hollow Output Shaft)

DOUBLE WORM GEAR REDUCER*

Input Horsepower Range at 1725 RPM: .04 to 8.49
Ratio Range: 50:1 to 3600:1
Max. Output Torque Range in in. lbs.: 650 to 28584

DOUBLE WORM GEAR* MOTORIZED (NEMA "C" FLANGE) REDUCER AND GEARMOTOR

Input Horsepower Range at 1725 RPM: .04 to 8.49
Ratio Range: 50:1 to 3600:1
Max. Output Torque Range in in. lbs.: 650 to 28584

"X" SERIES

HELICAL-WORM GEAR REDUCER

Input Horsepower Range at 1725 RPM: .27 to 15.55
Ratio Range: 50:1 to 180:1
Max. Output Torque Range in in. lbs.: 1867 to 34200

"DBI" SERIES

DOUBLE WORM GEAR. PARALLEL SHAFT REDUCER

Input Horsepower Range at 1725 RPM: .04 to 8.75
Ratio Range: 25:1 to 3850:1
Max. Output Torque Range in in. lbs.: 146 to 34290

"L" SERIES (Drop Bearing Type)

DOUBLE WORM GEAR REDUCER*

Input Horsepower Range at 1725 RPM: .17 to 8.49
Ratio Range: 50:1 to 3600:1
Max. Output Torque Range in in. lbs.: 1075 to 28584

DOUBLE WORM GEAR* MOTORIZED (NEMA "C" FLANGE) REDUCER AND GEARMOTOR

Input Horsepower Range at 1725 RPM: .17 to 8.49
Ratio Range: 50:1 to 3600:1
Max. Output Torque Range in in. lbs.: 1075 to 28584

TRIPLE REDUCTION

"C" SERIES

TRIPLE WORM GEAR REDUCER

Input Horsepower Range at 1725 RPM: .12 to 3.43
Ratio Range: 1000:1 to 180000:1
Max. Output Torque Range in in. lbs.: 2350 to 68743

TRIPLE WORM GEAR MOTORIZED (NEMA "C" FLANGE) REDUCER AND GEARMOTOR

Input Horsepower Range at 1725 RPM: .12 to 3.43
Ratio Range: 1000:1 to 180000:1
Max. Output Torque Range in in. lbs.: 2350 to 68743

"S" SERIES (Hollow Output Shaft)

TRIPLE WORM GEAR REDUCER

Input Horsepower Range at 1725 RPM: .12 to 2.13
Ratio Range: 1000:1 to 180000:1
Max. Output Torque Range in in. lbs.: 2350 to 28584

TRIPLE WORM GEAR MOTORIZED REDUCER AND GEARMOTOR

Input Horsepower Range at 1725 RPM: .12 to 2.13
Ratio Range: 1000:1 to 180000:1
Max. Output Torque Range in in. lbs.: 2350 to 28584

HOW TO SELECT

TWO METHODS OF SELECTION (presented on pages 8 to 21) have been designed, utilizing proper service factors, to compliment both the electrical and mechanical engineer.

1 **Horsepower Method** — Gearmotor Selection (Input Horsepower and Output RPM or Ratio known).

2 **Torque Method** — (Output Torque and Output RPM or Ratio known).

HOW TO SELECT

HORSEPOWER METHOD

Note:

Previous editions of catalog 100 referred to a "Gearmotor Selection Chart". Gearmotor selections are now shown in Gearmotor Section D. To select a reducer by the horsepower method use the following procedure.

Example A—A customer requires a reducer to drive the head shaft of his bucket conveyor at a speed of 250 RPM. The motor is 3 HP, 1800 RPM. The conveyor operates 10 hours per day, uniformly fed.

Selection Procedure

1. Determine the service factor. Based on the load classification for the given application from the tables on pages 228-231 (U) select the service factor (from the service factor table below) corresponding to the duration of service (10 hours) and type of prime mover (electric motor).

   Example A = 1.00 service factor.

2. Choose the ratio which will result in the output RPM which is closest to the required output RPM.

   Example A—7½:1 ratio=240 RPM.

3. Using the output RPM or ratio selected in step 2, refer to the appropriate selection chart (based on input speed, see pages 8-21) and select a reducer which has an input horsepower capacity equal to or greater than the motor horsepower.

   Example A=size 4 as indicated on the chart below which is rated at 3.53 HP @ 1800 RPM input speed with a service factor of 1.00.

Output RPM	Ratio	Unit Size	1	1FC	2	2FC	3	3FC	4	4FC	5	5FC	6	6FC	7	7FC	8
360	5	Output Torque	144	165	251	287	358	409	703	804	979	1119	1304	1490			
		Input H.P.	1.00	1.13	1.68	1.91	2.34	2.66	4.45	5.06	5.91	6.72	8.49	9.68			
240	7-1/2	Output Torque	175	201	329	379	453	519	819	942	1123	1287	1556	1788	2097	2407	2942
		Input H.P.	.84	.95	1.49	1.69	2.00	2.21	3.53	4.03	4.95	5.65	6.58	7.53	9.14	10.45	11.92

SEE SECTION D

TORQUE METHOD

Example B — 650 inch lbs. of output torque is required to drive a pure liquid agitator at an output speed of 245 RPM, 24 hours per day. Prime mover = 1200 RPM electric motor.

Selection Procedure

1. Determine the service factor from the table below, based on the load classification for the given application (see pages 228-231), length of service and type of prime mover. **Example B** — Service Factor = 1.25.
2. Calculate the **Design Torque** by multiplying the required output torque bv the service factor. **Example B — Design Torque** = 650 in lbs. x 1.25 = 812 in lbs.
3. Choose the output RPM or ratio on the appropriate selection chart (based on input speed) (see pages 8-21) which is closest to the required output RPM or ratio. **Example B** — Select 240 RPM.
4. Select a reducer corresponding to (a) the lowest output torque value on the selection chart which is greater than, or equal to, the **Design Torque** and (b) the required output RPM or ratio.

   Example B — A size 4C unit is chosen at 878 in. lbs. of output torque. See chart below.

Ratio	Out RPM	Unit Size	1	1FC	2	2FC	3	3FC	4	4FC	5
5	240	Output Torque	173	107	322	368	448	512	878	1004	1217
		Input H.P.	.81	.91	1.45	1.64	1.97	2.24	3.74	4.25	4.94

SEE PAGE 12

SERVICE FACTORS FOR DESIGN HP AND TORQUE

Prime Mover	Duration of Service Per Day	Driven Machine Load Classifications: Uniform U	Moderate Shock M	Heavy Shock H
Electric Motor	Occasional 1/2 hour	0.80	0.90	1.00
	Intermittent 2 hours	0.90	1.00	1.25
	10 hours	1.00	1.25	1.50
	24 hours	1.25	1.50	1.75
Multi-cylinder Internal Combustion Engine	Occasional 1/2 hour	0.90	1.00	1.25
	Intermittent 2 hours	1.00	1.25	1.50
	10 hours	1.25	1.50	1.75
	24 hours	1.50	1.75	2.00
Single cylinder Internal Combustion Engine	Occasional 1/2 hour	1.00	1.25	1.50
	Intermittent 2 hours	1.25	1.50	1.75
	10 hours	1.50	1.75	2.00
	24 hours	1.75	2.00	2.25

Following Service Factors Apply for Applications Involving Frequent Starts and Stops

Prime Mover	Duration of Service Per Day	Driven Machine Load Classifications: Uniform U	Moderate Shock M	Heavy Shock H
Electric Motor	Occasional 1/2 hour	0.90	1.00	1.25
	Intermittent 2 hours	1.00	1.25	1.50
	10 hours	1.25	1.50	1.75
	24 hours	1.50	1.75	2.00

EXPLANATORY NOTES: 1. Time specified for intermittent and occasional service refers to total operating time per day.
2. Term "Frequent starts and stops" refers to more than 10 - 20 starts per hour.

REDUCER SIZES

REDUCER SIZE IS DETERMINED BY SHAFT TO SHAFT CENTERLINE DISTANCE IN INCHES.
See pages 22-27 for a complete index of sizes available for a specific reducer type.

SINGLE REDUCTION—WORM GEAR

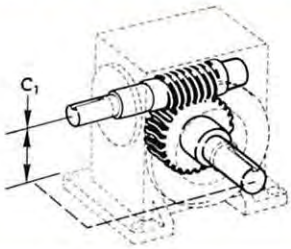

Size	1	2	3	4	5	6	7	8	9	10	11	12	13	14	15
C_1	1 1/3	1 3/4	2	2 5/8	3	3 1/2	4	4.6	5.167	6	6 1/2	7	7 5/8	8 1/8	9

DOUBLE REDUCTION—WORM GEAR

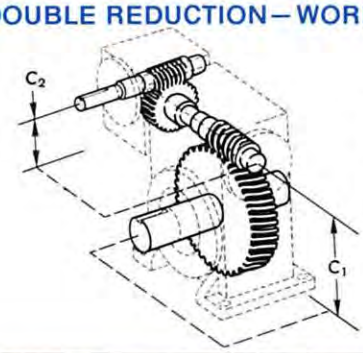

Size	1	2	3	4	5	6	7	8	9	10	11	12	13	14	15
C_2 Primary		1 1/3	1 1/3	1 1/3	2	2	2 5/8	2 5/8	2 5/8	3	3	3 1/2	3 1/2	4	5.167
C_1 Secondary		1 3/4	2	2 5/8	3	3 1/2	4	4.6	5.167	6	6 1/2	7	7 5/8	8 1/8	9

DOUBLE REDUCTION—HELICAL AND WORM GEAR

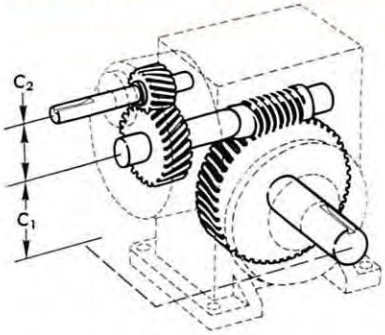

Size	1	2	3	4	5	6	7	8	9	10	11	12	13	14	15
C_2 Primary (Helical)					1 7/8	1 7/8	1 7/8	1 7/8	1 7/8	3	3	3	3	3	
C_1 Secondary (Worm)					3	3 1/2	4	4.6	5.167	6	6 1/2	7	7 5/8	8 1/8	

TRIPLE REDUCTION—WORM GEAR

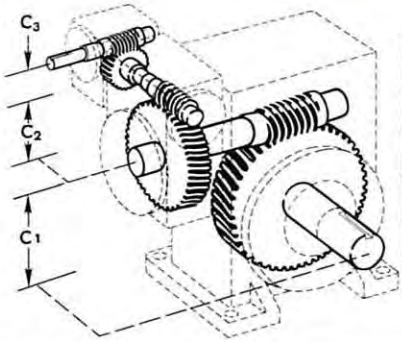

Size	1	2	3	4	5	6	7	8	9	10	11	12	13	14	15
C_3 Primary					1 1/3	1 1/3	1 1/3	1 1/3	1 1/3	2	2	2	2	2 5/8	2 5/8
C_2 Secondary					2	2	2 5/8	2 5/8	2 5/8	3	3	3 1/2	3 1/2	4	5.167
C_1 Third					3	3 1/2	4	4.6	5.167	6	6 1/2	7	7 5/8	8 1/8	9

WINSMITH

REDUCER SELECTION

SINGLE REDUCTION TORQUE* AND OUTPUT RPM OR RATIO

See page 6 and 7 for selection procedure, service factors and unit center distances.
See page 22-27 for a complete index of models available within each size.
For "**BEST BUY**" compare the price of the selected unit with that of the next higher rated unit.
FC indicates a fan cooled unit.

1800 RPM INPUT

All ratings stated are for A.G.M.A. Class 1 service.

Output RPM	Ratio	Unit Size	1	1FC	2	2FC	3	3FC	4	4FC	5	5FC	6	6FC	7	7FC	8
360	5	Output Torque	144	165	251	287	358	409	703	804	979	1119	1383	1580			
		Input H.P.	1.00	1.13	1.68	1.91	2.34	2.66	4.45	5.06	5.91	6.72	8.31	9.47			
240	7-1/2	Output Torque	175	201	329	379	453	519	819	942	1123	1287	1556	1788	2097	2407	2942
		Input H.P.	.84	.95	1.49	1.69	2.00	2.21	3.53	4.03	4.95	5.65	6.58	7.53	9.14	10.45	11.92
180	10	Output Torque	172	198	353	407	486	562	890	1026	1202	1389	1679	1935	2293	2643	3100
		Input H.P.	.68	.77	1.25	1.42	1.66	1.90	2.92	3.35	3.78	4.34	5.31	6.09	7.53	8.63	10.12
120	15	Output Torque	197	229	374	435	507	590	932	1084	1282	1501	1770	2059	2402	2797	3329
		Input H.P.	.55	.63	.96	1.09	1.26	1.44	2.20	2.54	2.83	3.28	4.05	4.68	5.64	6.51	7.19
90	20	Output Torque	183	215	380	445	512	603	964	1134	1314	1546	1864	2195	2514	2958	3392
		Input H.P.	.46	.52	.79	.90	1.02	1.18	1.76	2.05	2.32	2.70	3.26	3.80	4.41	5.13	5.81
72	25	Output Torque	190	225	378	448	527	624	977	1160	1289	1530	1740	2066	2515	2994	3271
		Input H.P.	.41	.47	.67	.78	.88	1.02	1.46	1.71	1.95	2.28	2.70	3.16	3.52	4.13	4.66
60	30	Output Torque	197	236	375	449	520	622	933	1118	1297	1554	1772	2122	2419	2898	3404
		Input H.P.	.37	.42	.60	.69	.77	.90	1.31	1.54	1.69	2.00	2.36	2.79	3.20	3.77	4.32
45	40	Output Torque	175	214	363	444	492	601	927	1134	1268	1551	1797	2199	2430	2968	3316
		Input H.P.	.32	.36	.49	.58	.63	.75	1.04	1.23	1.34	1.60	1.85	2.22	2.55	3.05	3.38
36	50	Output Torque	152	152	348	398	477	596	888	1109	1197	1496	1641	2052	2271	2851	3106
		Input H.P.	.28	.28	.42	.47	.52	.62	.83	1.00	1.09	1.32	1.46	1.78	1.98	2.40	2.68
30	60	Output Torque	167	187	318	400	444	566	826	1052	1113	1418	1507	1919	2062	2626	2869
		Input H.P.	.24	.26	.37	.44	.46	.55	.70	.85	.91	1.11	1.32	1.62	1.64	2.01	2.19

**The motor horsepower selected may exceed the reducer torque capacity. Limit torque to capacity shown.*

REDUCER SELECTION

SINGLE REDUCTION TORQUE* AND OUTPUT RPM OR RATIO

*Note: The energy efficient "D" line is available to replace "C" line units to 3" CD. See the D Line Catalog.

1800 RPM INPUT

All ratings stated are for A.G.M.A. Class 1 service.

8FC	9	9FC	10	10FC	11	11FC	12	12FC	13	13FC	14	14FC	15	15FC	Unit Size	Ratio	Output RPM
															Output Torque	5	360
															Input H.P.		
3372	3664	4211	5276	6462	6201	7107	7508	8617							Output Torque	7-1/2	240
13.60	15.89	18.19	21.92	26.70	26.62	30.39	30.16	34.47							Input H.P.		
3573	4113	4748	5689	6567	6833	7877	8062	9307	9581	11060	11105	12783	13957	16089	Output Torque	10	180
11.60	12.77	14.67	17.47	20.06	21.60	24.78	24.81	28.50	29.36	33.71	36.61	41.93	44.75	51.32	Input H.P.		
3876	4189	4864	5869	6824	7130	8291	8606	10007	10381	12071	11632	13526	14771	17176	Output Torque	15	120
8.30	9.78	11.27	12.85	14.83	16.32	18.84	19.15	22.11	22.00	25.39	25.03	29.00	31.28	36.09	Input H.P.		
3985	4454	5240	6156	7242	7386	8690	8654	10181	10318	12139	12179	14307	15363	18022	Output Torque	20	90
6.75	7.67	8.93	10.12	11.79	12.65	14.74	14.62	17.03	17.16	19.98	21.55	25.07	26.37	30.63	Input H.P.		
3889	4459	5292	5895	7008	7419	8832	8566	10167	10598	12598	12207	14511	15366	18266	Output Torque	25	72
5.45	6.35	7.43	8.72	10.24	10.22	12.01	11.81	13.83	14.81	17.40	16.89	19.82	20.72	24.30	Input H.P.		
4077	4209	5033	6178	7399	7332	8780	8560	10251	10527	12607	12081	14555	15056	18031	Output Torque	30	60
5.09	5.53	6.50	7.46	8.80	9.06	10.69	10.69	12.60	12.86	15.16	13.20	15.77	17.62	20.76	Input H.P.		
4050	4266	5226	5991	7328	7102	8687	8430	10328	10011	12265	11839	14416	14834	18119	Output Torque	40	45
4.04	4.23	5.07	5.83	6.98	7.10	8.51	8.31	9.96	9.44	11.31	12.05	14.37	14.60	17.46	Input H.P.		
3894	4052	5065	5655	7057	6734	8417	7774	9733	9661	12057	11021	13797	13908	17386	Output Torque	50	36
3.26	3.49	4.23	4.69	5.70	5.56	6.75	6.74	8.19	8.06	9.77	9.19	11.16	11.40	13.82	Input H.P.		
3660	3760	4790	5239	6673	6278	7998	7325	9346	8986	11430	10350	13184	13001	16562	Output Torque	60	30
2.67	2.86	3.49	3.85	4.72	4.63	5.68	5.33	6.54	6.98	8.56	7.69	9.42	8.71	10.87	Input H.P.		

*The motor horsepower selected may exceed the reducer torque capacity. Limit torque to capacity shown.

WINSMITH®

REDUCER SELECTION

SINGLE REDUCTION TORQUE* AND OUTPUT RPM OR RATIO

See page 6 and 7 for selection procedure, service factors and unit center distances.
See page 22-27 for a complete index of models available within each size.
For "**BEST BUY**" compare the price of the selected unit with that of the next higher rated unit.

1200 RPM INPUT

FC indicates a fan cooled unit.

All ratings stated are for A.G.M.A. Class 1 service.

Output RPM	Ratio	Unit Size	1	1FC	2	2FC	3	3FC	4	4FC	5	5FC	6	6FC	7	7FC	8
240	5	Output Torque	173	197	322	368	448	512	878	1004	1217	1391	1684	1878			
		Input H.P.	.81	.91	1.45	1.64	1.97	2.24	3.74	4.25	4.94	5.62	6.81	8.20			
160	7-1/2	Output Torque	202	231	395	454	546	626	1025	1179	1406	1612	1913	2198	2643	3034	3708
		Input H.P.	.66	.74	1.20	1.37	1.57	1.80	2.97	3.40	4.17	4.76	5.45	6.24	7.72	8.83	10.05
120	10	Output Torque	205	236	422	487	582	673	1116	1287	1517	1754	2071	2387	2866	3303	3854
		Input H.P.	.55	.62	1.01	1.15	1.34	1.54	2.47	2.83	3.21	3.70	4.43	5.08	6.31	7.24	8.42
80	15	Output Torque	226	263	446	519	618	718	1165	1355	1606	1881	2189	2545	2930	3412	4166
		Input H.P.	.43	.49	.77	.88	1.04	1.19	1.87	2.15	2.39	2.78	3.40	3.93	4.64	5.36	6.02
60	20	Output Torque	217	255	453	530	623	733	1199	1411	1616	1901	2330	2744	3147	3703	4243
		Input H.P.	.37	.42	.64	.73	.85	.98	1.49	1.73	1.94	2.25	2.77	3.23	3.71	4.32	4.86
48	25	Output Torque	223	264	449	533	620	735	1164	1380	1638	1944	2128	2526	3143	3742	4227
		Input H.P.	.33	.38	.55	.63	.71	.82	1.19	1.39	1.69	1.98	2.26	2.66	2.96	3.47	4.02
40	30	Output Torque	226	270	446	534	618	740	1166	1396	1622	1942	2194	2627	2959	3543	4201
		Input H.P.	.29	.33	.49	.57	.63	.73	1.12	1.32	1.45	1.70	2.01	2.37	2.66	3.14	3.60
30	40	Output Torque	208	215	431	527	597	731	1151	1408	1554	1901	2245	2747	3043	3716	4152
		Input H.P.	.26	.26	.41	.48	.53	.63	.88	1.06	1.12	1.34	1.58	1.90	2.16	2.59	2.85
24	50	Output Torque	152	152	398	398	556	693	1056	1320	1450	1812	2118	2648	2845	3562	3884
		Input H.P.	.20	.20	.34	.34	.42	.50	.68	.83	.91	1.10	1.30	1.58	1.67	2.03	2.26
20	60	Output Torque	187	187	379	400	522	650	978	1137	1338	1704	1866	2376	2661	3390	3584
		Input H.P.	.19	.19	.31	.32	.37	.44	.58	.65	.75	.92	1.14	1.41	1.42	1.75	1.83

**The motor horsepower selected may exceed the reducer torque capacity. Limit torque to capacity shown.*

REDUCER SELECTION

SINGLE REDUCTION TORQUE* AND OUTPUT RPM OR RATIO

1200 RPM INPUT

All ratings stated are for A.G.M.A. Class 1 service.

8FC	9	9FC	10	10FC	11	11FC	12	12FC	13	13FC	14	14FC	15	15FC	Unit Size	Ratio	Output RPM
															Output Torque	5	240
															Input H.P.		
4250	4618	5308	6650	8145	7816	8958	9464	10862							Output Torque	7-1/2	160
11.48	13.43	15.38	18.50	22.56	22.47	25.67	25.48	29.13							Input H.P.		
4443	5184	5984	7171	9278	8613	9928	10162	11732	12077	13941	13998	16113	17593	20281	Output Torque	10	120
9.66	10.79	12.39	14.74	16.94	18.24	20.94	20.99	24.12	24.78	28.47	30.92	35.43	37.82	43.38	Input H.P.		
4851	5280	6131	7397	8602	8987	10450	10848	12614	13086	15216	14633	17015	18619	21650	Output Torque	15	80
6.95	8.30	9.57	10.91	12.61	13.83	15.98	16.21	18.73	18.60	21.48	20.68	23.87	26.46	30.54	Input H.P.		
4985	5434	6393	7593	8933	9310	10953	10909	12834	13006	15302	15352	18035	19366	22717	Output Torque	20	60
5.66	6.30	7.34	8.38	9.77	10.73	12.51	12.43	14.49	14.50	16.90	18.27	21.28	22.37	26.00	Input H.P.		
5024	5512	6542	7431	8834	9352	11133	10523	12491	13359	15879	15388	18291	19369	23025	Output Torque	25	48
4.72	5.28	6.19	7.43	8.74	8.66	10.19	9.76	11.44	12.56	14.76	14.36	16.87	17.62	20.68	Input H.P.		
5032	5305	6344	7788	9326	9242	11068	10790	12922	13269	15891	14853	17788	18979	22729	Output Torque	30	40
4.24	4.72	5.57	6.32	7.47	7.70	9.11	9.12	10.77	10.94	12.92	11.64	13.73	14.97	17.66	Input H.P.		
5072	5217	6391	7552	9237	8952	10950	10626	13018	12619	15460	14924	18172	18699	22839	Output Torque	40	30
3.41	3.50	4.21	4.94	5.94	6.05	7.27	7.09	8.51	8.00	9.60	10.28	12.28	12.47	14.92	Input H.P.		
4870	5016	6270	6915	8630	8488	10610	9800	12269	12177	15198	13892	17392	17532	21915	Output Torque	50	24
2.75	2.93	3.55	3.88	4.72	4.73	5.76	5.78	7.05	6.87	8.35	7.86	9.57	9.75	11.85	Input H.P.		
4572	4702	5990	6485	8261	7914	10081	8958	11429	11328	14407	13046	16619	16388	20877	Output Torque	60	20
2.25	2.40	2.95	3.21	3.95	3.93	4.84	4.42	5.43	5.98	7.36	6.56	8.07	7.49	9.37	Input H.P.		

**The motor horsepower selected may exceed the reducer torque capacity. Limit torque to capacity shown.*

WINSMITH

REDUCER SELECTION

SINGLE REDUCTION TORQUE* AND OUTPUT RPM OR RATIO

See page 6 and 7 for selection procedure, service factors and unit center distances.
See page 22-27 for a complete index of models available within each size.
For "**BEST BUY**" compare the price of the selected unit with that of the next higher rated unit.

900 RPM INPUT

FC indicates a fan cooled unit.

All ratings stated are for A.G.M.A. Class 1 service.

Output RPM	Ratio	Unit Size	1	1FC	2	2FC	3	3FC	4	4FC	5	5FC	6	6FC	7	7FC	8
180	5	Output Torque	189	216	365	417	514	587	1028	1147	1439	1644	1918	2192			
		Input H.P.	.67	.76	1.24	1.41	1.71	1.94	3.30	3.76	4.41	5.02	6.34	7.22			
120	7-1/2	Output Torque	217	249	433	498	599	687	1176	1351	1618	1855	2295	2638	3091	3548	4341
		Input H.P.	.54	.60	1.00	1.14	1.31	1.50	2.58	2.95	3.63	4.14	4.94	5.66	6.81	7.79	8.87
90	10	Output Torque	223	257	462	532	637	736	1250	1441	1704	1970	2475	2853	3346	3857	4551
		Input H.P.	.46	.52	.84	.95	1.12	1.28	2.10	2.41	2.74	3.15	4.01	4.60	5.56	6.38	7.49
60	15	Output Torque	243	282	487	566	682	793	1329	1545	1797	2105	2608	3032	3544	4128	4776
		Input H.P.	.36	.40	.64	.74	.88	1.00	1.62	1.87	2.04	2.37	3.08	3.56	4.24	4.91	5.26
45	20	Output Torque	237	279	494	573	688	800	1338	1475	1792	2108	2658	3131	3645	4288	4852
		Input H.P.	.31	.35	.53	.61	.72	.82	1.27	1.39	1.64	1.91	2.41	2.81	3.26	3.80	4.20
36	25	Output Torque	242	286	490	582	673	740	1271	1380	1847	2192	2568	3048	3585	4267	4804
		Input H.P.	.28	.31	.46	.53	.59	.64	.99	1.07	1.46	1.71	2.09	2.46	2.56	3.01	3.46
30	30	Output Torque	242	290	486	582	674	809	1328	1590	1813	2171	2609	3124	3570	4276	5017
		Input H.P.	.24	.27	.41	.48	.53	.62	.99	1.16	1.24	1.46	1.84	2.17	2.44	2.89	3.25
22.5	40	Output Torque	215	215	470	573	658	800	1283	1475	1721	2105	2557	3128	3516	4295	4798
		Input H.P.	.21	.21	.34	.40	.45	.53	.76	.86	.96	1.15	1.39	1.67	1.90	2.28	2.50
18	50	Output Torque	152	152	398	398	599	740	1151	1380	1596	1995	2406	3000	3240	4056	4525
		Input H.P.	.16	.16	.27	.27	.35	.41	.58	.67	.77	.94	1.14	1.39	1.45	1.77	2.00
15	60	Output Torque	187	187	400	400	567	650	1065	1137	1466	1867	2218	2825	3023	3851	4081
		Input H.P.	.15	.15	.25	.25	.32	.35	.49	.52	.64	.79	1.05	1.30	1.24	1.52	1.58

*The motor horsepower selected may exceed the reducer torque capacity. Limit torque to capacity shown.

REDUCER SELECTION

SINGLE REDUCTION TORQUE* AND OUTPUT RPM OR RATIO

900 RPM INPUT

All ratings stated are for A.G.M.A. Class 1 service.

8FC	9	9FC	10	10FC	11	11FC	12	12FC	13	13FC	14	14FC	15	15FC	Unit Size	Ratio	Output RPM
															Output Torque	5	180
															Input H.P.		
4975	5443	6256	7837	9599	9211	10557	11153	12801							Output Torque	7-1/2	120
10.13	11.93	13.67	16.44	20.04	19.96	22.80	22.62	25.87							Input H.P.		
5247	6063	6999	8367	9658	10151	11701	11977	13826	13745	15867	16498	18990	20734	23901	Output Torque	10	90
8.60	9.51	10.93	12.96	14.90	16.21	18.61	18.66	21.44	21.28	24.45	27.47	31.49	33.61	38.56	Input H.P.		
5561	6223	7225	8718	10137	10592	12316	12784	14865	15014	17458	17035	19809	21943	25515	Output Torque	15	60
6.02	7.41	8.55	9.74	11.26	12.33	14.25	14.42	16.67	16.13	18.63	18.17	20.98	23.54	27.18	Input H.P.		
5700	6573	7734	9073	10675	10973	12909	12856	15125	15213	17897	18093	21254	22823	26773	Output Torque	20	45
4.89	5.76	6.72	7.55	8.82	9.57	11.17	11.10	12.95	12.80	14.93	16.29	18.98	19.96	23.20	Input H.P.		
5711	6567	7795	8758	10411	10886	12959	12636	14998	15743	18714	18135	21557	22827	27135	Output Torque	25	36
4.06	4.76	5.59	6.66	7.85	7.63	8.99	8.83	10.37	11.21	13.18	12.83	15.08	15.75	18.50	Input H.P.		
6008	6252	7476	9115	10916	10892	13044	12716	15229	15638	18728	17379	20814	21745	26042	Output Torque	30	30
3.85	4.24	5.01	5.61	6.64	6.89	8.16	8.16	9.65	9.79	11.57	10.31	12.17	13.04	15.39	Input H.P.		
5860	6295	7713	8839	10812	10550	12905	12171	14911	14770	18096	17588	21416	22037	26916	Output Torque	40	22.5
2.99	3.21	3.86	4.39	5.29	5.43	6.54	6.18	7.44	7.10	8.52	9.21	11.02	11.19	13.40	Input H.P.		
5392	5966	7457	8344	10414	9888	12360	11549	14459	14351	17911	16372	20497	20662	25827	Output Torque	50	18
2.56	2.64	3.22	3.54	4.33	4.19	5.12	5.20	6.36	6.16	7.50	7.07	8.62	8.78	10.68	Input H.P.		
5207	5478	6978	7712	9824	9263	11800	10810	13792	13350	16979	15375	19586	19314	24604	Output Torque	60	15
1.95	2.13	2.62	2.89	3.58	3.50	4.32	4.02	4.96	5.38	6.64	5.90	7.26	6.75	8.45	Input H.P.		

**The motor horsepower selected may exceed the reducer torque capacity. Limit torque to capacity shown.*

WINSMITH®

REDUCER SELECTION

SINGLE REDUCTION TORQUE* AND OUTPUT RPM OR RATIO

See page 6 and 7 for selection procedure, service factors and unit center distances.
See page 22-27 for a complete index of models available within each size.
For "**BEST BUY**" compare the price of the selected unit with that of the next higher rated unit.

FC indicates a fan cooled unit.

600 RPM INPUT

All ratings stated are for A.G.M.A. Class 1 service.

Output RPM	Ratio	Unit Size	1	1FC	2	2FC	3	3FC	4	4FC	5	5FC	6	6FC	7	7FC	8
120	5	Output Torque	207	237	413	472	589	673	1202	1374	1700	1943	2370	2709			
		Input H.P.	.50	.56	.95	1.08	1.33	1.51	2.61	2.98	3.52	4.01	5.28	6.02			
80	7-1/2	Output Torque	233	267	474	545	658	754	1348	1549	1862	2134	2753	3165	3784	4343	5273
		Input H.P.	.39	.44	.75	.85	.097	1.11	2.01	2.30	2.83	3.23	4.01	4.60	5.62	6.43	7.25
60	10	Output Torque	244	281	505	582	697	806	1400	1475	1915	2214	2957	3409	3907	4504	5375
		Input H.P.	.34	.39	.63	.71	.84	.96	1.60	1.68	2.09	2.40	3.26	3.74	4.38	5.03	5.97
40	15	Output Torque	260	302	532	595	752	857	1516	1762	2012	2356	3107	3613	4287	4993	5475
		Input H.P.	.26	.30	.49	.54	.67	.75	1.27	1.47	1.56	1.81	2.52	2.90	3.49	4.04	4.03
30	20	Output Torque	258	304	539	573	758	800	1475	1475	1987	2328	3033	3573	4221	4966	5549
		Input H.P.	.24	.27	.40	.43	.55	.58	.97	.97	1.25	1.46	1.89	2.20	2.57	3.00	3.26
24	25	Output Torque	262	310	534	621	730	740	1380	1380	2082	2471	3099	3678	4088	4867	5461
		Input H.P.	.21	.24	.35	.40	.45	.46	.75	.75	1.14	1.33	1.76	2.06	2.00	2.35	2.68
20	30	Output Torque	259	310	530	595	735	857	1512	1785	2027	2428	3103	3716	4309	5160	5991
		Input H.P.	.18	.21	.31	.35	.41	.46	.79	.91	.97	1.14	1.52	1.80	2.03	2.40	2.66
15	40	Output Torque	215	215	513	573	726	800	1430	1475	1905	2330	2913	3563	4064	4963	5543
		Input H.P.	.15	.15	.26	.29	.36	.39	.60	.62	.75	.89	1.11	1.33	1.52	1.82	1.98
12	50	Output Torque	152	152	398	398	647	740	1255	1380	1756	2195	2734	3000	3690	4619	5272
		Input H.P.	.12	.12	.19	.19	.27	.30	.45	.48	.60	.73	.91	.99	1.15	1.40	1.61
10	60	Output Torque	187	187	400	400	614	650	1137	1137	1607	2047	2636	2850	3434	4374	4648
		Input H.P.	.11	.11	.19	.19	.25	.26	.37	.37	.50	.62	.89	.95	.98	1.21	1.25

**The motor horsepower selected may exceed the reducer torque capacity. Limit torque to capacity shown.*

REDUCER SELECTION

SINGLE REDUCTION TORQUE* AND OUTPUT RPM OR RATIO

600 RPM INPUT

All ratings stated are for A.G.M.A. Class 1 service.

8FC	9	9FC	10	10FC	11	11FC	12	12FC	13	13FC	14	14FC	15	15FC	Unit Size	Ratio	Output RPM
															Output Torque	5	120
															Input H.P.		
6044	6811	7829	9812	12018	11481	13158	13901	15955							Output Torque	7-1/2	80
8.28	10.06	11.52	13.84	16.89	16.74	19.13	18.96	21.69							Input H.P.		
6195	7422	8568	10342	11939	12704	14644	14956	17265	17767	20510	20562	23669	25818	29762	Output Torque	10	60
6.85	7.85	9.02	10.78	12.39	13.67	15.70	15.70	18.05	18.47	21.23	23.04	26.41	28.16	32.31	Input H.P.		
6375	7777	9030	10901	12676	13241	15397	15989	18592	19193	22317	21193	24643	27398	31858	Output Torque	15	40
4.67	6.28	7.25	8.27	9.57	10.44	12.07	12.18	14.08	13.88	16.05	15.23	17.59	19.83	22.89	Input H.P.		
6518	7951	9355	10842	12756	13714	16134	16077	18915	18611	21895	22618	26571	28528	33465	Output Torque	20	30
3.80	4.73	5.52	6.12	7.14	8.12	9.48	9.43	11.00	10.58	12.34	13.79	16.07	16.89	19.64	Input H.P.		
6491	7825	9287	10955	13022	13547	16128	15173	18009	19676	23389	22678	26958	28544	33930	Output Torque	25	24
3.14	3.86	4.54	5.70	6.72	6.45	7.60	7.19	8.44	9.50	11.18	10.91	12.83	13.38	15.73	Input H.P.		
7175	7810	9339	11088	13279	13608	16296	15905	19048	19582	23451	21202	25392	27853	33357	Output Torque	30	20
3.15	3.64	4.31	4.64	5.50	5.88	6.97	6.98	8.26	8.35	9.88	8.55	10.04	11.33	13.37	Input H.P.		
6771	7597	9307	10756	13157	13179	16121	15598	19109	17967	22011	21999	26788	27563	33666	Output Torque	40	15
2.38	2.66	3.21	3.66	4.41	4.66	5.61	5.41	6.52	5.88	7.06	7.89	9.44	9.57	11.48	Input H.P.		
6610	7095	8869	10069	12567	12280	15350	14447	18087	17928	22375	20479	25639	25845	32307	Output Torque	50	12
1.97	2.17	2.64	2.94	3.59	3.58	4.37	4.49	5.50	5.28	6.43	6.08	7.43	7.55	9.19	Input H.P.		
5930	6382	8130	9172	11685	11264	14350	13044	15754	16700	21240	19206	24466	24160	30777	Output Torque	60	10
1.54	1.72	2.12	2.37	2.93	2.93	3.62	3.33	3.92	4.64	5.74	5.07	6.25	5.81	7.29	Input H.P.		

**The motor horsepower selected may exceed the reducer torque capacity. Limit torque to capacity shown.*

WINSMITH®

REDUCER SELECTION

DOUBLE AND TRIPLE REDUCTION TORQUE* AND OUTPUT RPM OR RATIO

See page 6 and 7 for selection procedure, service factors and unit center distances.
See page 22-27 for a complete index of models available within each size.

EXPLANATION:

H Double Reduction Series Helical and Worm Gear
D Double Reduction Series Worm Gear
T Triple Reduction Series Worm Gear

Output Torque
Input H.P.

1800 RPM INPUT

All ratings stated are for A.G.M.A. Class 1 service.

Output RPM	Ratio	2	3	4	5	6	7	8	9	10	11	12	13	14	15
36	50				2192	3048	4267	5711	7795	10411	12959	14998	18714	21557	
	H				1.76	2.53	3.10	4.19	5.76	8.09	9.27	10.69	13.59	15.55	
36	50	595	857	1139	2430	2975	5088	5894	6113	8656	8269	12403	12536		
	D	.60	.80	1.00	1.89	2.34	3.88	4.44	4.45	5.90	5.90	8.23	8.23		
30	60				2171	3124	4276	6008	7476	10916	16134	15229	18728	20806	
	H				1.51	2.24	2.98	3.96	5.16	6.84	9.77	9.95	11.93	12.04	
24	75				2471	3678	4867	6491	7200	13022	16128	18009	22600	22500	
	H				1.37	2.12	2.42	3.24	3.68	6.93	7.84	8.70	11.16	11.16	
24	75	595	857	1553	2578	4061	5815	6746	7985	9792	11279	13306	18123	17497	30863
	D	.46	.63	1.00	1.47	2.34	3.27	3.53	4.45	4.95	5.90	6.58	8.23	9.00	15.90
22.5	80				2105	3128	4295	5860	7713	10812	12905	14911	18096	21408	
	H				1.18	1.72	2.35	3.09	3.98	5.45	6.74	7.67	8.79	10.86	
20	90				2428	3716	5160	7175	7800	13279	12296	19048	23451	25382	
	H				1.18	1.85	2.48	3.24	3.75	5.68	5.52	8.51	10.18	9.97	
18	100				1995	3000	4056	5392	7457	10414	12360	14459	17911	20497	
	H				.97	1.43	1.82	2.41	3.31	4.46	5.28	6.55	7.74	8.89	
18	100	583	857	1475	2606	3855	5569	7256	9903	14831	15123	22364	23349	18907	34092
	D	.42	.51	.78	1.14	1.66	2.39	2.96	4.04	5.45	5.90	8.23	8.23	7.34	12.78
15	120				1867	2825	3851	5207	9307	13157	16121	19109	22011	26777	
	H				.81	1.34	1.57	2.01	3.30	4.55	5.79	6.67	7.28	9.31	
12	150				2195	3000	4619	6610	8869	12567	15350	18087	22375	25639	
	H				.75	1.02	1.44	2.03	2.72	3.71	4.51	5.66	6.63	7.66	
12	150	595	857	1720	2759	4075	6518	8269	11388	15673	20320	24565	29719	32220	45855
	D	.33	.39	.68	.91	1.34	2.04	2.59	3.70	4.34	5.77	6.77	7.89	8.98	10.84
10	180				2047	2850	4374	5930	8130	11685	14350	15754	21240	24466	
	H				.63	.98	1.24	1.59	2.18	3.03	3.74	4.04	5.91	6.44	
9	200	595	857	1475	2699	3791	6065	7864	9903	16424	20200	23519	27277	34542	56980
	D	.29	.35	.50	.74	1.02	1.48	1.79	2.27	3.33	4.74	5.11	5.23	7.34	11.72

**The motor horsepower selected may exceed the reducer torque capacity. Limit torque to capacity shown.*

REDUCER SELECTION

DOUBLE AND TRIPLE REDUCTION TORQUE* AND OUTPUT RPM OR RATIO

EXPLANATION:

Output Torque
Input H.P.

1800 RPM INPUT

All ratings stated are for A.G.M.A. Class 1 service.

1

Output RPM	Ratio	2	3	4	5	6	7	8	9	10	11	12	13	14	15
6	300	595	857	1652	2838	4075	6664	9198	11388	17535	23598	28584	33881	33425	47328
	D	.25	.29	.46	.64	.86	1.33	1.65	2.15	2.75	3.77	4.68	5.31	4.72	6.45
3.6	500	621	800	1475	3029	4804	6149	8253	10550	19512	16867	23120	31049	34825	62173
	D	.22	.24	.32	.51	.78	.79	.97	1.25	2.32	1.95	2.69	3.26	3.36	6.35
2.4	750	621	857	1785	3066	4804	6664	9805	11388	18745	22257	28584	30580	36081	51552
	D	.19	.22	.33	.42	.62	.74	.94	1.15	1.58	1.95	2.60	2.69	2.35	3.49
1.8	1000	621	800	1475	3084	4804	6149	8387	10550	17000	20200	28584	31073	42459	63234
	D	.19	.21	.26	.39	.56	.55	.66	.84	1.27	1.57	2.13	2.13	2.60	4.29
1.8	1000				2775	4075	6149	8387	9903	17587	20200	28584	34466	40307	64076
	T				.31	.397	.515	.62	.72	1.06	1.24	1.83	1.95	2.21	3.43
1.2	1500	621	740	1380	3103	4075	6664	10016	11388	19191	18253	24733	31750	36902	53107
	D	.17	.18	.21	.33	.40	.53	.66	.82	1.06	1.09	1.46	1.87	1.56	2.29
1.2	1500				2994	4075	6664	10016	11388	19205	25384	28584	37110	39642	57483
	T				.31	.29	.482	.60	.70	.93	1.19	1.41	1.70	1.69	2.18
.9	2000	573	800	1380	2715	3600	5293	7900	9439	17000	20200	28584	31812	42458	64075
	D	.18	.20	.21	.275	.322	.393	.489	.591	.855	1.043	1.371	1.384	1.72	2.933
.9	2000				2785	4075	6149	8455	9903	17587	20200	28584	34918	39483	64076
	T				.243	.302	.361	.423	.481	.692	.817	1.132	1.188	1.33	2.008
.6	3000	398	740	1380	2350	3000	4770	7180	8864	15000	17464	20739	31750	33260	52354
	D	.14	.16	.18	.236	.273	.321	.406	.483	.663	.749	1.056	1.363	1.40	2.103
.6	3000				3015	4075	6664	10123	11388	19212	25384	28584	37110	39344	57483
	T				.240	.269	.347	.421	.484	.598	.758	.888	1.060	.94	1.31
.5	3600	400	650	1137	2056	2850	4635	6510	8864	14200	16388	15754	24961	33260	48070
	D	.14	.16	.17	.219	.283	.306	.357	.430	.595	.668	.732	1.155	1.303	1.44
.36	5000				3129	4804	6149	8496	10550	23688	20200	28584	35186	42459	64076
	T				.219	.271	.258	.289	.340	.597	.519	.78	.779	.79	1.088
.24	7500				3133	4804	6664	10188	11388	23760	25384	28584	37110	39344	57483
	T				.193	.234	.255	.295	.334	.500	.518	.621	.719	.538	.775

**The motor horsepower selected may exceed the reducer torque capacity. Limit torque to capacity shown.*

WINSMITH®

REDUCER SELECTION

DOUBLE AND TRIPLE REDUCTION TORQUE* AND OUTPUT RPM OR RATIO

See page 6 and 7 for selection procedure, service factors and unit center distances.
See page 22-27 for a complete index of models available within each size.

H Double Reduction Series Helical and Worm Gear
D Double Reduction Series Worm Gear
T Triple Reduction Series Worm Gear

EXPLANATION:

Output Torque
Input H.P.

1800 RPM INPUT

All ratings stated are for A.G.M.A. Class 1 service.

Output RPM	Ratio	2	3	4	5	6	7	8	9	10	11	12	13	14	15
.18	10000				3135	4804	6149	8517	10550	23797	20200	28584	35284	42459	64076
	T				.188	.226	.217	.206	.270	.446	.391	.545	.513	.537	.799
.09	20000				3138	4804	6149	8517	10550	23851	20200	28584	32492	42459	64076
	T				.175	.206	.190	.206	.232	.362	.32	.422	.421	.426	.636
.06	30000				3139	4804	6664	10221	11380	23869	25384	28584	37110	39344	57483
	T				.168	.194	.193	.214	.237	.338	.327	.367	.435	.295	.407
.045	40000				3139	4804	6149	8520	10550	17000	20200	28584	32531	42459	64076
	T				.168	.195	.178	.190	.211	.252	.282	.35	.346	.335	.492
.036	50000				3139	4804	6149	8521	10550	17000	20200	28584	32538	42459	64076
	T				.168	.196	.179	.190	.212	.233	.259	.319	.314	.303	.445
.03	60000				3139	4075	6664	10226	10550	19212	20200	28584	32543	39344	57483
	T				.153	.173	.182	.199	.189	.244	.254	.314	.308	.255	.343
.024	75000				3140	4075	6664	10227	8864	19212	17464	25790	31750	39344	57483
	T				.148	1.73	.184	.200	.180	.227	.224	.281	.307	.234	.312
.0225	80000				2715	3600	5293	7900	9439	17000	20200	28584	32549	40422	64076
	T				.153	.161	.163	.175	.189	.228	.24	.277	.272	.283	.43
.02	90000				3034	4075	6664	10228	8864	19212	17464	24614	31750	39344	57483
	T				.145	.158	.167	.180	.172	.223	.22	.273	.303	.225	.299
.018	100000				2715	3600	5293	7900	9439	17000	20200	28584	32553	37755	64076
	T				.152	.160	.164	.175	.190	.213	.233	.271	.265	.249	.395
.012	150000				2350	3000	4770	7180	8864	15000	17464	20739	31118	33260	52354
	T				.149	.155	.156	.169	.173	.199	.208	.264	.291	.268	.338
.01	180000				2350	3000	4635	7180	8864	15000	17464	20739	29579	33260	52354
	T				.138	.143	.155	.155	.158	.196	.205	.262	.283	.259	.323

**The motor horsepower selected may exceed the reducer torque capacity. Limit torque to capacity shown.*

REDUCER SELECTION

DOUBLE AND TRIPLE REDUCTION TORQUE* AND OUTPUT RPM OR RATIO

See page 6 and 7 for selection procedure, service factors and unit center distances.
See page 22-27 for a complete index of models available within each size.

H Double Reduction Series Helical and Worm Gear
D Double Reduction Series Worm Gear
T Triple Reduction Series Worm Gear

EXPLANATION:

Output Torque
Input H.P.

1800 RPM INPUT

All ratings stated are for A.G.M.A. Class 1 service.

1

Output RPM	Ratio	2	3	4	5	6	7	8	9	10	11	12	13	14	15
24	50				2471	3678	4867	6491	7800	13022	16128	18009	23389	24100	
	H				1.37	2.12	2.42	3.24	3.97	6.93	7.84	8.70	11.52	11.90	
24	50	595	857	1335	2546	3632	5407	7251	7508	10602	10118	14860	15071		
	D	.43	.57	.81	1.39	1.97	2.85	3.23	3.74	4.93	4.93	6.74	6.74		
20	60				2428	3716	4160	7175	8200	13279	19000	19048	23451	25382	
	H				1.17	1.85	2.48	3.24	3.93	5.68	7.86	8.51	10.18	9.97	
16	75				2676	4169	5050	7498	7200	15945	17464	20345	22600	22500	
	H				1.04	1.68	1.74	2.56	2.55	5.85	5.83	6.72	7.70	7.74	
16	75	595	857	1785	2697	4075	6275	7906	9689	12009	13687	16060	21684	21745	38344
	D	.33	.45	.80	1.08	1.67	2.46	2.85	3.74	4.17	4.93	5.95	6.74	7.61	13.43
15	80				2330	3563	4963	6771	9307	13157	16121	19109	22011	26777	
	H				.92	1.37	1.88	2.45	3.30	4.55	5.79	6.72	7.28	9.31	
13.33	90				2615	4075	5849	8076	7800	15131	19391	23324	26100	28979	
	H				.89	1.43	1.96	2.52	2.63	4.45	5.89	7.18	7.82	7.77	
12	100				2195	3000	4619	6610	8869	12567	15350	18087	22375	25639	
	H				.75	1.02	1.44	2.03	2.72	3.71	4.51	5.66	6.63	7.66	
12	100	591	857	1475	2667	4075	5903	7656	9903	15881	18286	26460	27890	23255	42328
	D	.31	.37	.56	.83	1.24	1.78	2.18	2.85	4.06	4.93	6.74	6.74	6.20	10.79
10	120				2047	2850	4374	5930	9909	14997	19173	22545	25082	32787	
	H				.63	.98	1.25	1.59	2.46	3.59	4.77	5.44	5.71	7.85	
8	150				2339	3000	4770	7180	9439	14244	17464	20739	26611	31382	
	H				.57	.74	1.06	1.55	2.04	2.92	3.58	4.56	5.47	6.50	
8	150	595	857	1785	2822	4075	6611	8778	11388	16899	23464	27631	33159	39604	48220
	D	.24	.29	.51	.66	.97	1.47	1.95	2.65	3.29	4.66	5.33	6.14	7.61	7.87
6.67	180				2056	2850	4635	6467	8864	13116	16348	15754	24961	29094	
	H				.46	.72	.93	1.22	1.67	2.38	2.98	2.87	4.87	5.34	
6	200	595	857	1475	2730	4075	6149	8078	9903	17001	20200	25889	30296	41397	60517
	D	.22	.26	.37	.55	.78	1.07	1.31	1.62	2.43	3.40	3.96	4.04	6.12	8.67

**The motor horsepower selected may exceed the reducer torque capacity. Limit torque to capacity shown.*

WINSMITH®

REDUCER SELECTION

DOUBLE AND TRIPLE REDUCTION TORQUE* AND OUTPUT RPM OR RATIO

See page 6 and 7 for selection procedure, service factors and unit center distances.
See page 24-29 for a complete index of models available within each size.

EXPLANATION:

- **H** Double Reduction Series Helical and Worm Gear
- **D** Double Reduction Series Worm Gear
- **T** Triple Reduction Series Worm Gear

Output Torque
Input H.P.

1200 RPM INPUT

All ratings stated are for A.G.M.A. Class 1 service.

Output RPM	Ratio	2	3	4	5	6	7	8	9	10	11	12	13	14	15
4	300	595	857	1785	2902	4075	6664	9531	11388	18213	24818	28584	37012	34816	49670
	D	.19	.21	.36	.48	.63	.97	1.23	1.56	2.03	2.83	3.37	4.13	3.44	4.74
2.4	500	621	800	1475	3066	4804	6149	8342	10550	22497	20200	26521	31750	41397	64076
	D	.17	.19	.24	.39	.58	.58	.71	.92	1.92	1.65	2.22	2.41	2.81	4.65
1.6	750	621	857	1785	3091	4804	6664	9945	11388	19041	25384	28584	35587	36637	52583
	D	.15	.17	.25	.32	.47	.55	.74	.86	1.18	1.60	1.92	2.26	1.71	2.55
1.2	1000	621	800	1475	3103	4804	6149	8432	10550	17000	20200	28584	31564	42459	64075
	D	.15	.16	.20	.30	.43	.41	.50	.63	.94	1.16	1.59	1.60	1.89	3.17
1.2	1000				2781	4075	6149	8432	9903	17587	20200	28584	34767	40040	64076
	T				.23	.298	.382	.45	.52	.78	.90	1.36	1.43	1.58	2.47
.8	1500	621	740	1380	3115	4075	6664	10088	11388	19212	21020	28584	31750	37191	53635
	D	.13	.14	.16	.25	.31	.40	.51	.61	.79	.91	1.23	1.41	1.15	1.70
.8	1500				3008	4075	6664	10088	11388	19212	25384	28584	37110	41668	57483
	T				.23	.216	.361	.45	.52	.69	.88	1.04	1.26	1.29	1.59
.6	2000	573	800	1380	2715	3600	5293	7900	9439	17000	20200	28584	32062	42458	64075
	D	.14	.15	.16	.209	.249	.301	.374	.451	.649	.789	1.035	1.049	1.29	2.167
.6	2000				2785	4075	6149	8478	9903	17587	20200	28584	35070	38305	64076
	T				.185	.230	.273	.317	.359	.517	.611	.838	.878	.95	1.462
.4	3000	398	740	1380	2350	3000	4770	7180	8864	15000	17464	20739	31750	33260	52534
	D	.11	.12	.15	.185	.214	.249	.315	.355	.510	.573	.825	1.054	1.046	1.561
.4	3000				3021	4075	6664	10159	11388	19212	25384	28584	37110	39344	57483
	T				.183	.206	.262	.319	.367	.449	.568	.669	.792	.70	.968
.333	3600	400	650	1137	2056	2850	4635	6510	8864	14200	16388	15754	24961	33260	48070
	D	.11	.12	.13	.172	.223	.238	.278	.335	.460	.511	.573	.901	.978	1.09
.24	5000				3133	4804	6149	8505	10550	23760	20200	28584	35249	42459	64706
	T				.169	.209	.196	.220	.260	.458	.389	.604	.596	.60	.817
.16	7500				3133	4804	6664	10203	11388	23809	25384	28584	37110	39344	57483
	T				.150	.182	1.96	.227	.259	.388	.400	.484	.557	.411	.590

*The motor horsepower selected may exceed the reducer torque capacity. Limit torque to capacity shown.

REDUCER SELECTION

DOUBLE AND TRIPLE REDUCTION TORQUE* AND OUTPUT RPM OR RATIO

EXPLANATION:

Output Torque
Input H.P.

1200 RPM INPUT

All ratings stated are for A.G.M.A. Class 1 service.

1

Output RPM	Ratio	2	3	4	5	6	7	8	9	10	11	12	13	14	15
.12	10000				3137	4804	6149	8514	10550	23833	20200	28584	35315	42459	64076
	T				.146	.177	.166	.181	.208	.35	.306	.427	.399	.416	.613
.06	20000				3139	4804	6149	8510	10550	23166	20200	28584	32518	42459	64076
	T				.133	.160	.146	.158	.179	.283	.253	.334	.331	.336	.496
.04	30000				3139	4804	6664	10225	11270	23328	25384	28584	37110	39344	57483
	T				.128	.151	.150	.166	.184	.268	.261	.293	.351	.236	.325
.03	40000				3139	4586	6149	8521	10550	17000	20200	28584	32543	42459	64076
	T				.129	.150	.138	.147	.165	.20	.224	.283	.277	.271	.389
.024	50000				3139	4312	6149	8522	10550	17000	20200	28584	32548	42459	64076
	T				.129	.149	.139	.148	.167	.185	.206	.258	.252	.245	.338
.02	60000				3139	4075	6664	10228	10550	19212	20200	28584	32552	39344	57483
	T				.117	.133	.142	.155	.148	.195	.203	.254	.247	.208	.280
.016	75000				3140	4075	6664	10229	8864	19212	17464	23228	31750	38926	57483
	T				.113	.135	.144	.157	.140	.181	.178	.219	.249	.190	.256
.015	80000				2715	3600	5273	7900	9439	17000	20200	28584	32556	35664	64076
	T				.116	.123	.126	.135	.147	.181	.192	.225	.219	.215	.346
.013	90000				3034	3924	6664	9954	8864	19212	17464	22129	31750	36898	57483
	T				.110	.121	.130	.139	.133	.179	.175	.212	.245	.178	.246
.012	100000				2715	3600	5293	7900	9439	17000	20200	28141	32558	33210	64076
	T				.116	.123	.126	.136	.149	.170	.187	.219	.214	.190	.316
.008	150000				2350	3000	4770	7180	8864	15000	17464	20739	27769	33260	52354
	T				.113	.119	.120	.131	.135	.158	.166	.216	.228	.216	.27
.0067	180000				2350	3000	4635	7180	8864	15000	17464	20739	26377	33260	52354
	T				.104	.109	.118	.119	.094	.157	.164	.214	.227	.21	.26

*The motor horsepower selected may exceed the reducer torque capacity. Limit torque to capacity shown.

WINSMITH®

INDEX TO REDUCER SIZES

SINGLE REDUCTION

MODEL	INPUT H.P. RANGE	OUTPUT RPM @ 1725 RPM INPUT	RATIO RANGE	MAX. OUTPUT TORQUE RANGE (IN. LBS.)	DIM. AND SPECS. PAGE NO.	●—AVAILABLE REDUCER SIZES PAGE NUMBER REDUCER RATINGS														
						1	2	3	4	5	6	7	8	9	10	11	12	13	14	15
CB	.01 to 56.23	345 to 22.4	5:1 to 77:1	164 to 62113	32	● 122	● 124	● 126	● 128	● 130	● 132	● 134	● 136	● 138	● 140	● 142	● 144	● 146	● 148	● 150
CT	.01 to 56.28	345 to 22.4	5:1 to 77:1	164 to 62113	34	● 122	● 124	● 126	● 128	● 130	● 132	● 134	● 136	● 138	● 140	● 142	● 144	● 146	● 148	● 150
CV	.01 to 56.28	345 to 22.4	5:1 to 77:1	164 to 62113	36	● 122	● 124	● 126	● 128	● 130	● 132	● 134	● 136	● 138	● 140	● 142	● 144	● 146	● 148	● 150
FCT	.01 to 56.28	345 to 22.4	5:1 to 77:1	164 to 62113	38	● 122	● 124	● 126	● 128	● 130	● 132	● 134	● 136	● 138	● 140	● 142	● 144	● 146	● 148	● 150
FCV	.01 to 56.28	345 to 22.4	5:1 to 77:1	164 to 62113	40	● 122	● 124	● 126	● 128	● 130	● 132	● 134	● 136	● 138	● 140	● 142	● 144	● 146	● 148	● 150
MCT MCTW	.01 to 16.89	345 to 22.4	5:1 to 77:1	164 to 10,576	42	● 122	● 124	● 126	● 128	● 130	● 132	● 134	● 136							
MCV MCVW	.01 to 16.89	345 to 22.4	5:1 to 77:1	164 to 10,576	44	● 122	● 124	● 126	● 128	● 130	● 132	● 134	● 136							
MFCT MFCTW	.01 to 16.89	345 to 22.4	5:1 to 77:1	164 to 10,576	46	● 122	● 124	● 126	● 128	● 130	● 132	● 134	● 136							

Refer to D-Line Catalog for these sizes.

SINGLE REDUCTION

MODEL	INPUT H.P. RANGE	OUTPUT RPM @ 1725 RPM INPUT	RATIO RANGE	MAX. OUTPUT TORQUE RANGE (IN. LBS.)	DIM. AND SPECS. PAGE NO.	●—AVAILABLE REDUCER SIZES PAGE NUMBER REDUCER RATINGS														
						1	2	3	4	5	6	7	8	9	10	11	12	13	14	15
MFCV MFCVW	.01 to 16.89	345 to 22.4	5:1 to 77:1	164 to 10,576	48	● 122	● 124	● 126	● 128	● 130	● 132	● 134	● 136							
SF	.07 to 40.76	345 to 22.4	5:1 to 77:1	420 to 28,752	50			● 126	● 128	● 130	● 132	● 134	● 136	● 138	● 140		● 144			
ST	.07 to 40.76	345 to 22.4	5:1 to 77:1	420 to 28,752	52			● 126	● 128	● 130	● 132	● 134	● 136	● 138	● 140		● 144			
FSF	.07 to 40.76	345 to 22.4	5:1 to 77:1	420 to 28,752	54			● 126	● 128	● 130	● 132	● 134	● 136	● 138	● 140		● 144			
FST	.07 to 40.76	345 to 22.4	5:1 to 77:1	420 to 28,752	56			● 126	● 128	● 130	● 132	● 134	● 136	● 138	● 140		● 144			
MSF MSFW	.07 to 16.89	345 to 22.4	5:1 to 77:1	420 to 10,576	58			● 126	● 128	● 130	● 132	● 134	● 136	● 138						
MST MSTW	.07 to 16.89	345 to 22.4	5:1 to 77:1	420 to 10,576	60			● 126	● 128	● 130	● 132	● 134	● 136	● 138						
MFSF MFSFW	.07 to 16.89	345 to 22.4	5:1 to 77:1	420 to 10,576	62			● 126	● 128	● 130	● 132	● 134	● 136	● 138						

WINSMITH

INDEX TO REDUCER SIZES

MODEL	INPUT H.P. RANGE	OUTPUT RPM @ 1725 RPM INPUT	RATIO RANGE	MAX. OUTPUT TORQUE RANGE (IN. LBS.)	DIM. AND SPECS. PAGE NO.	●—AVAILABLE REDUCER SIZES PAGE NUMBER REDUCER RATINGS														
						1	2	3	4	5	6	7	8	9	10	11	12	13	14	15
SINGLE REDUCTION																				
MFST MFSTW	.07 to 16.89	345 to 22.4	5:1 to 77:1	420 to 10,576	64			● 126	● 128	● 130	● 132	● 134	● 136	● 138						
L	.09 to 40.76	345 to 22.4	5:1 to 77:1	770 to 28752	66				● 128	● 130	● 132	● 134	● 136	● 138	● 140		● 144			
ML MLW	.09 to 16.89	345 to 22.4	5:1 to 77:1	770 to 10,576	68				● 128	● 130	● 132	● 134	● 136							
DOUBLE REDUCTION																				
CBD	.03 to 15.90	34.5 to .48	50:1 to 3600:1	650 to 68631	72		● 152	● 154	● 156	● 158	● 164	● 170	● 176	● 182	● 188	● 194	● 200	● 206	● 212	● 218
CTD	.03 to 15.90	34.5 to .48	50:1 to 3600:1	650 to 68631	74		● 152	● 154	● 156	● 158	● 164	● 170	● 176	● 182	● 188	● 194	● 200	● 206	● 212	● 218
CVD	.03 to 15.90	34.5 to .48	50:1 to 3600:1	650 to 68631	76		● 152	● 154	● 156	● 158	● 164	● 170	● 176	● 182	● 188	● 194	● 200	● 206	● 212	● 218
MCTD MCTDW	.03 to	34.5 to .48	50:1 to 3600:1	650 to 68631	78		● 152	● 154	● 156	● 158	● 164	● 170	● 176	● 182	● 188	● 194	● 200	● 206	● 212	● 218
MCVD MCVDW	.03 to 15.90	34.5 to .48	50:1 to 3600:1	650 to 68631	80		● 152	● 154	● 156	● 158	● 164	● 170	● 176	● 182	● 188	● 194	● 200	● 206	● 212	● 218

Refer to D-Line Catalog for these sizes.

DOUBLE REDUCTION

MODEL	INPUT H.P. RANGE	OUTPUT RPM @ 1725 RPM INPUT	RATIO RANGE	MAX. OUTPUT TORQUE RANGE (IN. LBS.)	DIM. AND SPECS. PAGE NO.	●—AVAILABLE REDUCER SIZES PAGE NUMBER REDUCER RATINGS														
						1	2	3	4	5	6	7	8	9	10	11	12	13	14	15
CBX	.27 to 15.55	34.5 to 9.6	50:1 to 180:1	1867 to 34200	82					● 158	● 164	● 170	● 176	● 182	● 188	● 194	● 200	● 206	● 212	
CTX	.27 to 15.55	34.5 to 9.6	50:1 to 180:1	1867 to 34200	84					● 158	● 164	● 170	● 176	● 182	● 188	● 194	● 200	● 206	● 212	
CVX	.27 to 15.55	34.5 to 9.6	50:1 to 180:1	1867 to 34200	86					● 158	● 160	● 166	● 172	● 178	● 184	● 190	● 196	● 202	● 208	
DBI	.04 to 8.75	34.5 to .44	25:1 to 3,850:1	146 to 34,290	88	1 ● 224	2 ● 225	3 ● 226	4 ● 228	4½ ● 230	5 ● 232	6 ● 234	8 ● 236	9 ● 238						
SFD	.04 to 8.49	34.5 to .48	50:1 to 3600:1	650 to 28584	90			● 154	● 156	● 158	● 164	● 170	● 176	● 182	● 184		● 200			
STD	.04 to 8.49	34.5 to .48	50:1 to 3600:1	650 to 28584	92			● 154	● 156	● 158	● 164	● 170	● 176	● 182	● 188		● 200			
MSFD MSFDW	.04 to 8.49	34.5 to .48	50:1 to 3600:1	650 to 28584	94			● 154	● 156	● 158	● 164	● 170	● 176	● 182	● 188		● 200			
MSTD MSTDW	.04 to 8.49	34.5 to .48	50:1 to 3600:1	650 to 28584	96			● 154	● 156	● 158	● 164	● 170	● 176	● 182	● 188		● 200			

WINSMITH

INDEX TO REDUCER SIZES

MODEL	INPUT H.P. RANGE	OUTPUT RPM @ 1725 RPM INPUT	RATIO RANGE	MAX. OUTPUT TORQUE RANGE (IN. LBS.)	DIM. AND SPECS. PAGE NO.	●—AVAILABLE REDUCER SIZES PAGE NUMBER REDUCER RATINGS														
						1	2	3	4	5	6	7	8	9	10	11	12	13	14	15
DOUBLE REDUCTION																				
LD	.17 to 8.49	34.5 to .48	50:1 to 3600:1	1,075 to 28584	98				● 156	● 158	● 164	● 170	● 176	● 182	● 188		● 200			
MLD MLDW	.17 to 8.49	34.5 to .48	50:1 to 3600:1	1,075 to 28584	100				● 156	● 158	● 164	● 170	● 176	● 182	● 188		● 200			
TRIPLE REDUCTION																				
CTT	.12 to 3.43	1.73 to .009	1000:1 to 180000:1	2350 to 68743	104					● 158	● 164	● 170	● 176	● 182	● 188	● 194	● 200	● 206	● 212	● 218
CVT	.12 to 3.43	1.73 to .009	1000:1 to 180000:1	2350 to 68743	106					● 158	● 164	● 170	● 176	● 182	● 188	● 194	● 200	● 206	● 212	● 218
MCTT MCTTW	.12 to 3.43	1.73 to .009	1000:1 to 180000:1	2350 to 68743	108					● 158	● 164	● 170	● 176	● 182	● 188	● 194	● 200	● 206	● 212	● 218
MCVT MCVTW	.12 to 3.43	1.73 to .009	1000:1 to 180000:1	2350 to 68743	110					● 158	● 164	● 170	● 176	● 182	● 188	● 194	● 200	● 206	● 212	● 218
ADDITIONAL SERIES AVAILABLE																				
MHCT	.04 to 16.89	34.5 to 22.4	5:1 to 77:1	770 to 10,576	116				● 128	● 130	● 132	● 134	● 136							
MHCV	.04 to 16.89	34.5 to 22.4	5:1 to 77:1	770 to 10,576	118				● 128	● 130	● 132	● 134	● 136							

Refer to D-Line Catalog for these sizes.

ADDITIONAL SERIES AVAILABLE

MODEL	INPUT H.P. RANGE	OUTPUT RPM @ 1725 RPM INPUT	RATIO RANGE	MAX. OUTPUT TORQUE RANGE (IN. LBS.)	DIM. AND SPECS. PAGE NO.	●—AVAILABLE REDUCER SIZES PAGE NUMBER REDUCER RATINGS														
						1	2	3	4	5	6	7	8	9	10	11	12	13	14	15
LX	.27 to 10.69	34.5 to 9.6	50:1 to 180:1	1867 to 28584	86 & 98					● 158	● 164	● 170	● 176	● 182	● 188		● 200			
SCTX	.27 to 10.69	34.5 to 9.6	50:1 to 180:1	1867 to 28584	84 & 92					● 158	● 164	● 170	● 176	● 182	● 188		● 200			
SFX DOUBLE REDUCTION HELICAL-WORM (Hollow Output Shaft)	.27 to 10.69	34.5 to 9.6	50:1 to 180:1	1867 to 28584	84 & 90					● 158	● 164	● 170	● 176	● 182	● 188		● 200			
LT TRIPLE REDUCTION (Drop Bearing Type)	.12 to 2.13	1.73 to .39	1000:1 to 180000:1	2350 to 28584	98 & 106					● 158	● 164	● 170	● 176	● 182	● 188		● 200			
MLT TRIPLE REDUCTION MOTORIZED (Drop Bearing Type)	.12 to 2.13	1.73 to .39	1000:1 to 180000:1	2350 to 28584	100 & 110					● 158	● 164	● 170	● 176	● 182	● 188		● 200			
MSTT MSTTW	.12 to 2.13	1.73 to .009	1000:1 to 180000:1	2350 to 28584	96 & 108					● 158	● 164	● 170	● 176	● 182	● 188		● 200			
MSFT MSFTW	.12 to 2.13	1.73 to .009	1000:1 to 180000:1	2350 to 28584	94 & 108					● 158	● 164	● 170	● 176	● 182	● 188		● 200			
STT	.12 to 2.13	1.73 to .009	1000:1 to 180000:1	2350 to 28584	92 & 104					● 158	● 164	● 170	● 176	● 182	● 188		● 200			
SFT	.12 to 2.13	1.73 to .009	1000:1 to 180000:1	2350 to 28584	90 & 104					● 158	● 164	● 170	● 176	● 182	● 188		● 200			

WINSMITH

HOW TO ORDER

NOMENCLATURE

EXAMPLE: **Catalog Description** C-Line Series, 3.50" Center Distance, Worm on Top, Single Reduction, Dual Output Shaft (LR), 140TC Frame, C-Face Input, 30:1 Ratio
Catalog Code 6 MCT, LR, 140TC, 30:1
End Unit Part Number 006MCTS22000EK

When ordering a replacement unit, it is important that you provide the WINSMITH® end unit part number, which completely describes the unit. This information, sometimes called the "serial number", is available from the nameplate pinned to every WINSMITH speed reducer. Having this information available expedites the order and helps to insure that the correct part number is ordered.

0 06 m CT S 2 2 00 0 EK

SERIES

CODE	DESC	EUPN
0	C-Line	0

CENTER DISTANCE

CODE	DESC	EUPN
01	1.33"	01
02	1.75"	02
03	2.00"	03
04	2.625"	04
05	3.00"	05
06	3.50"	06
07	4.00"	07
08	4.60"	08
09	5.167"	09
10	6.00"	10
11	6.50"	11
12	7.00"	12
13	7.625"	13
14	8.125"	14
15	9.00"	15

INPUT STYLE

CODE	DESC	EUPN
C	C-Flange w/Coupling motor adapter	C
M	C-Flange w/Quill motor adapter	M
(blank)	No C-Flange	X

BASIC MODEL

CODE	DESC	EUPN
CB	Worm on bottom	CB
CT	Worm on top	CT
CV	Vertical output shaft	CV
L	Drop bearing output	CL
S	Hollow shaft output	CS
SF	Flange mount hollow output	SF
ST	Torque arm hollow output	SR
SCB	Foot mt.—wos bottom—hollow output	SB
SCT	Foot mt.—wos top—hollow output	ST

REDUCTION STAGES

CODE	DESC	EUPN
S	Single	S
D	Double	D
T	Triple	T
X	Helical primary	X
K	C-Eliminator	K

SHAFT ARRANGEMENT

Horizontal Units

CODE	DESC	EUPN
LR	Solid out—double ext	2
R	Solid out—right ext	3
L	Solid out—left ext	4

Vertical Units

CODE	DESC	EUPN
RU	H.S. right—S.S. up	2
RD	H.S. right—S.S. down	3
LU	H.S. left—S.S. up	4
LD	H.S. left—S.S. down	5
RUD	H.S. right—S.S. up & down	6
LUD	H.S. left—S.S. up & down	7

Hollow Output

CODE	DESC	EUPN
DR	Driven machine right	3
DL	Driven machine left	4
DLR	Symmetric Hollow Shaft	5

2-9 & AV	Double & Triple Reduction check with the factory

MOTOR FRAME SIZE

CODE/DESC	EUPN
42C	W
48C	V
56C	1
143-145TC	2
182-184TC	3
213-215TC	4
254-256TC	5
284-286TC	A
None (Input Shaft)	X

OUTPUT STYLE

CODE	EUPN
Solid Output Shaft	00

Hollow Output Shaft

CODE	DESC	EUPN
1/2	.50" Bore	08
9/16	.563" Bore	09
5/8	.625" Bore	10

(#—increase EUPN by one for each 1/16" increase in bore size)

6-3/16	6.1875"	99

RATIO

CODE	EUPN
4:1	AW
5:1	A8
7.5:1	BT
8:1	BX
10:1	B7
15:1	C1
20:1	DN
25:1	D4
30:1	EK
38:1	E2
40:1	FA
50:1	FT
60:1	GC
75:1	G7
80:1	HC
90:1	HR
100:1	HO
120:1	JM
150:1	J9
180:1	KZ
200:1	LC
250:1	L2
300:1	MM
360:1	M4
500:1	N4
750:1	P5
1000:1	QO
1500:1	R6
2000:1	S1
3000:1	TV
3600:1	T6
4000:1	U8
5000:1	UE
6000:1	UM
8000:1	3M
10000:1	U5
and others	

HOW TO ORDER

SHAFT ARRANGEMENTS

On the specification and dimension pages for each model reducer a section is devoted to the assembly designation for various shaft arrangements. R and L arrangements are available as standard units. The following illustrations are for explanatory purposes only.

SINGLE REDUCTION

The letters shown refer to the position of the slow speed shaft in relation to the input or high speed shaft.

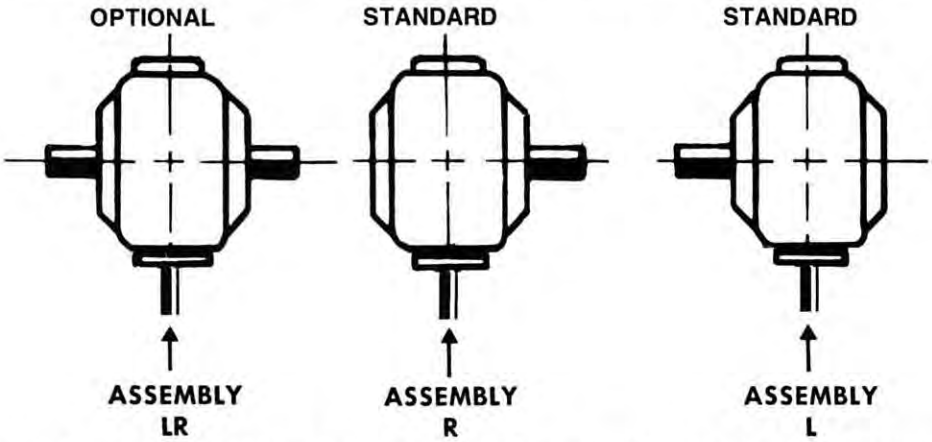

When facing the input shaft, the slow speed shaft is to the left (L), or right (R), or both (LR).

DOUBLE REDUCTION

Letters shown to the left of the hyphen refer to the high speed shaft and the letters to the right reference the slow speed shaft.

The reducer is viewed looking at the attachment housing:

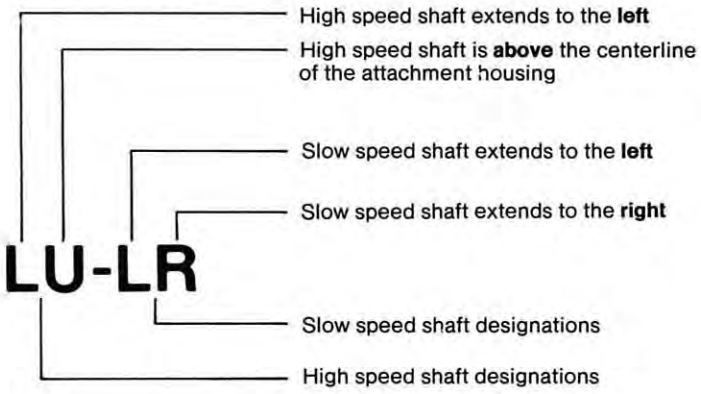

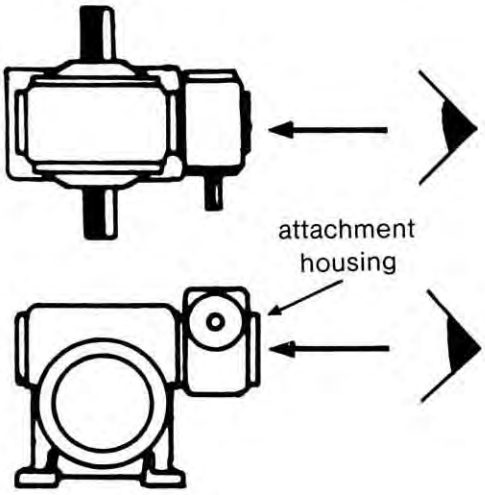

INDEX SPECIFICATIONS AND DIMENSIONS

Section 2

Single Reduction Units

Model	Page
CB	32
CT	34
CV	36
FCT	38
FCV	40
MCT-MCTW	42
MCV-MCVW	44
MFCT-MFCTW	46
MFCV-MFCVW	48
SF	50
ST	52
FSF	54
FST	56
MSF-MSFW	58
MST-MSTW	60
MFSF-MFSFW	62
MFST-MFSTW	64
L	66
ML-MLW	68

Section 3

Double Reduction Units

Model	Page
CBD	72
CTD	74
CVD	76
MCTD-MCTDW	78
MCVD-MCVDW	80
CBX	82
CTX-SCTX	84
CVX-LX	86
DBI	88
SFD-SFX	90
STD-SCTX	92
MSFD-MSFDW	94
MSTD-MSTDW	96
LD-LX	98
MLD-MLDW	100

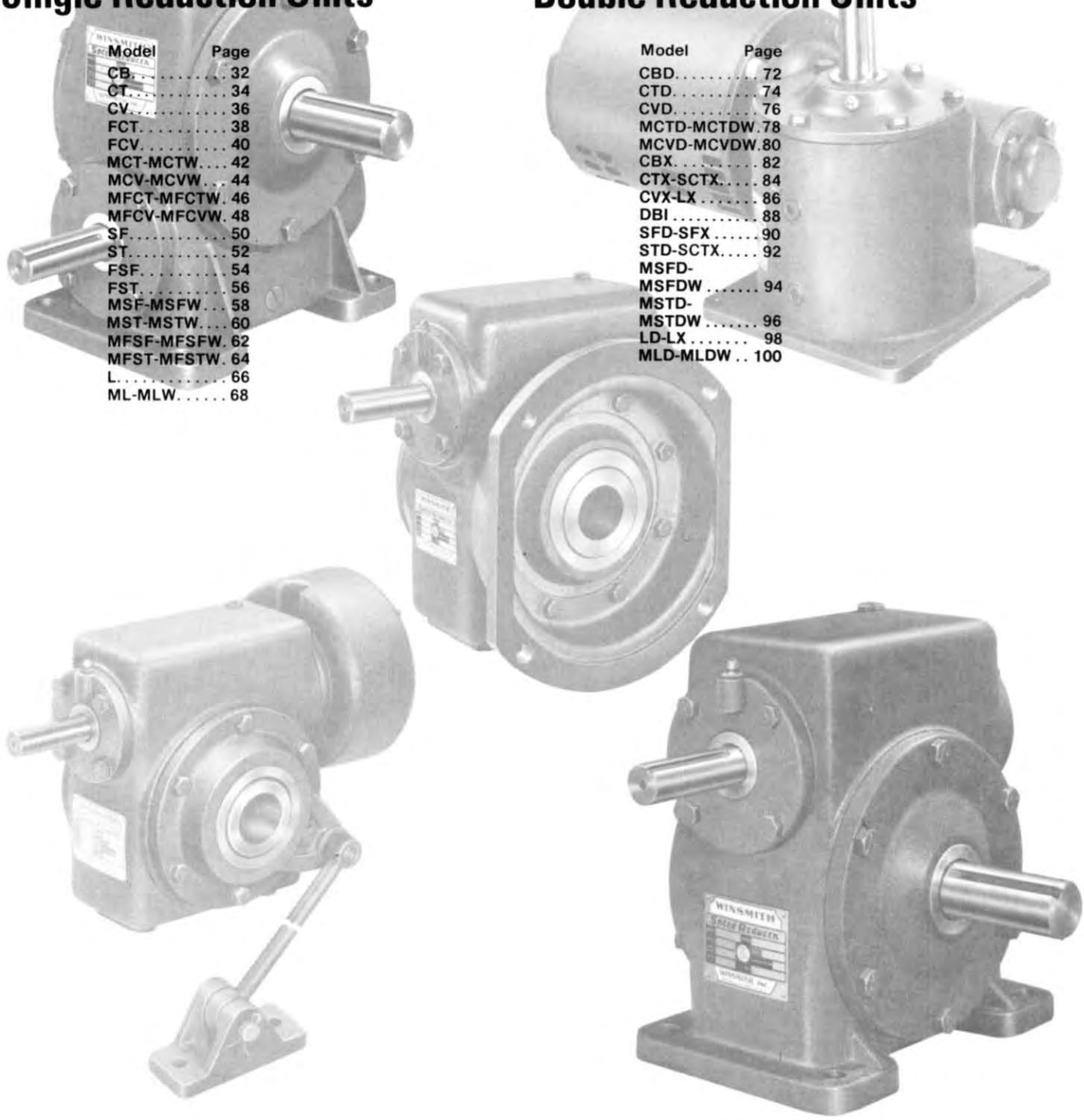

Section 4

Triple Reduction Units

Model Page
CTT-STT-SFT 104
CVT 106
MCTT-MCTTW
MSTT-MSFT 108
MCVT-MCVTW 110

ADDITIONAL INTEGRAL FEATURES

CT1-CV1
Torque
Controls 112
TORQUE
MONITOR 114
MHCT
Hydraulic
Motor
Flange 116
MHCV
Hydraulic
Motor
Flange 118
"C" FLANGE
ADAPTER
COUPLING
TYPE 120

WINSMITH

single reduction

SERIES: CB

GEAR RATIOS AVAILABLE 5:1 THRU 60:1
COMPLETE TORQUE AND HP RATINGS ..... PAGES 122-150
OVERHUNG LOAD RATINGS ..... PAGES 123-223
SERVICE FACTORS ..... PAGE 230
COUPLING ADAPTERS ..... PAGE 120
HYDRAULIC MOTOR ADAPTERS ..... PAGE 116

TABLE OF WEIGHTS

Unit	1	2	3	4	5	6	7	8	9	10	11	12	13	14	15
Net Weight	11	18	19	38	55	66	95	135	160	230	280	390	460	635	1080

Units #3, 4, 5, 6, 7, 8, 9, 10, and 12 are available with hollow output shafts, see page 50-52. Alloy steel slow speed shafts available.

DIMENSIONS:

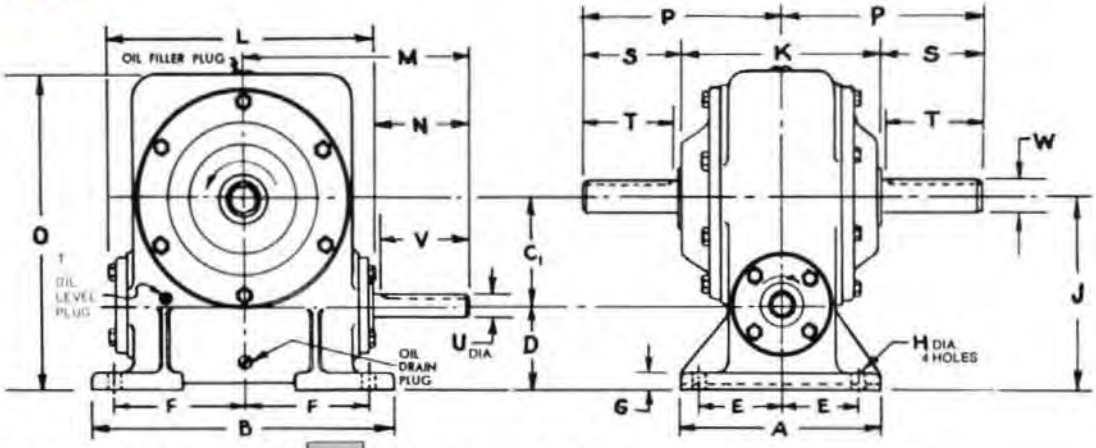

SPEED REDUCER DIMENSIONS (in inches) Refer to D Line for these sizes.

Unit	A	B	C_1	D	E	F	G	H	J	K	L	M	O	P	High Speed Shaft U*	N	V	Keyway	Slow Speed Shaft W*	S	T	Keyway
1	3½	5	1.33	2	1⅜	2⅛	⅜	3/32	3½	4	4⅞	4⅛	5¼	4	½	1 11/16	1½	⅛ × 1/16	⅜	2	1¾	3/16 × 3/32
2	5⅛	4¼	1¾	2	2 1/16	1¾	½	7/32	3¾	4¾	5¾	4¾	6	4½	⅝	1⅞	1¾	3/16 × 3/32	¾	2⅛	2	3/16 × 3/32
3	5⅛	4 5/16	2	2	2 1/16	1¾	½	7/32	4	4¾	5¾	4¾	6¼	4¾	⅝	1⅞	1¾	3/16 × 3/32	⅞	2⅜	2¼	3/16 × 3/32
4	5	7	2⅝	2½	2	3	½	7/32	5⅛	5⅜	7⅞	6	8⅜	5⅜	¾	2 1/16	2	3/16 × 3/32	1	2 11/16	2½	¼ × ⅛
5	6	8¼	3	3	2⅜	3½	⅜	5/16	6	6	8 3/16	6½	9¾	5⅞	⅞	2 5/16	2¼	3/16 × 3/32	1¼	2⅞	2¾	¼ × ⅛
6	6¼	9¼	3½	3⅛	2⅝	4⅛	⅝	5/16	6⅝	7¼	9¼	7 1/16	11	7	1	2 7/16	2½	¼ × ⅛	1½	3⅜	3¼	⅜ × 3/16
7	7	11	4	3½	2⅞	4⅞	⅝	5/16	7½	7¼	11	8	13	7½	1	2½	2½	¼ × ⅛	1¾	3⅞	3¾	⅜ × 3/16
8	8	12½	4.6	3¾	3¼	5½	¾	11/16	8.350	9¼	12½	9	14½	8½	1⅛	2¾	2¾	¼ × ⅛	1¾	3⅞	3¾	⅜ × 3/16
9	8½	13½	5.167	3¾	3½	6	¾	11/16	8.917	9¼	13½	9½	16	9	1⅛	2¾	2¾	¼ × ⅛	2	4⅜	4¼	½ × ¼
10	10	15	6	4½	4	6½	¾	13/16	10½	10¼	15⅝	10¼	18½	9¾	1¼	2 11/16	2¾	¼ × ⅛	2¼	4⅜	4½	½ × ¼
11	10	16	6½	5	4	7	¾	13/16	11½	10¾	16⅛	10½	20	10½	1¼	2 11/16	2¾	¼ × ⅛	2½	5⅛	5	⅝ × 5/16
12	12½	18	7	6	5	7½	1	1 1/16	13	12¼	18½	12⅜	21½	11¾	1½	3⅜	3⅜	⅜ × 3/16	2¾	5⅜	5½	⅝ × 5/16
13	14½	19	7⅝	6½	5¾	8	1	1 1/16	14⅛	14¾	20	13	23	13½	1½	3¼	3¼	⅜ × 3/16	3	6⅛	6	¾ × ⅜
14	16½	21	8⅛	7	6¾	9	1¼	1 5/16	15⅛	16¾	23	15	25	15	1¾	3¾	3¾	⅜ × 3/16	3¼	6⅜	6½	¾ × ⅜
15	19	23	9	8 5/16	7½	8¼	1¾	1 5/16	17 7/16	18	26 5/16	17⅜	29 11/16	16¼	2	4 3/16	4¼	½ × ¼	3 9/16	7¼	7	⅞ × 7/16

*Shaft diameter tolerances +.000-.001. For construction purposes send for Certified Dimension Sheets.
†For input speeds below 1160 RPM, the oil level must be raised to lubricate the slow speed bearings. Advise at order entry.

PARTS LIST:

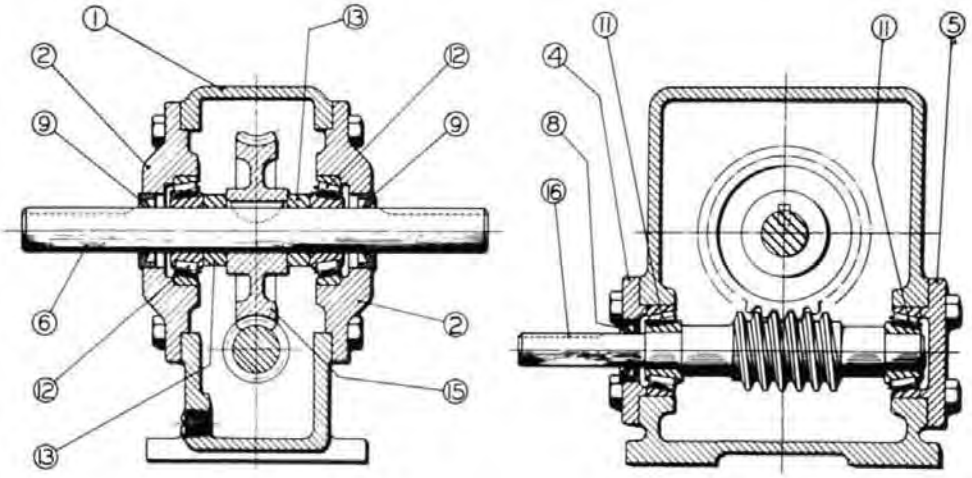

PARTS INDEX

Part. No.	Description
1	Housing
2	Slow Speed Cover — Open
3	Slow Speed Cover — Closed — Not Shown
4	High Speed Cover — Open
5	High Speed Cover — Closed
5A	High Speed Adapter — Not Shown — Used with H. S. Cover Closed Units 10 Thru 15 Incl.
6	Slow Speed Shaft — Double Extension
7	Slow Speed Shaft — Single Extension — Not Shown
8	Oil Seal — High Speed
9	Oil Seal — Slow Speed
*11	Roller Bearing — High Speed
12	Roller Bearing — Slow Speed
13	Slow Speed Spacer (Not used on #2CB)
15	Slow Speed Worm Gear — Bronze
16	High Speed Worm and Shaft Integral
26	High Speed Lock Nut — Not Shown — Used On Units 10 Thru 15 Incl.

* Series 1 Thru 9 Uses 2 Single Row Bearings. Series 10 Thru 15 Uses 1 Single and 1 Two Row Bearing.

SHAFT ARRANGEMENTS:

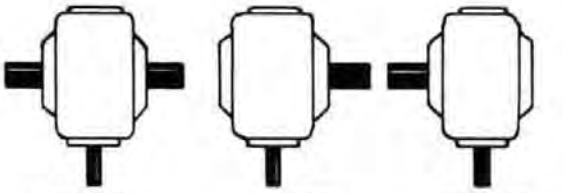

ASSEMBLY LR OPTIONAL

ASSEMBLY R STANDARD

ASSEMBLY L STANDARD

(A) When facing High Speed Shaft, Slow Speed Shaft is to left (L), or right (R) or both (LR).

(B) No extra charge for the standard assemblies provided the shaft extensions are of standard length.

(C) The input shaft may be driven in either direction.

(D) Units may be mounted in any position, (ceiling, sidewall, etc.), if specified when ordered.

single reduction

SERIES: CT

GEAR RATIOS AVAILABLE 5:1 THRU 60:1
COMPLETE TORQUE AND HP RATINGS ..... PAGES 122-150
OVERHUNG LOAD RATINGS ..... PAGES 123-223
SERVICE FACTORS ..... PAGE 230
COUPLING ADAPTERS ..... PAGE 120
HYDRAULIC MOTOR ADAPTERS ..... PAGE 116

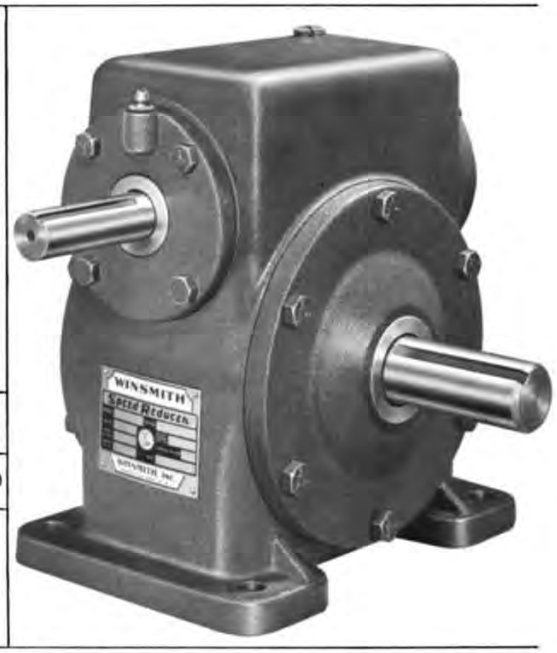

TABLE OF WEIGHTS

Unit	1	2	3	4	5	6	7	8	9	10	11	12	13	14	15
Net Weight	11	18	20	38	51	68	95	135	155	225	273	390	455	651	1080

Units #3, 4, 5, 6, 7, 8, 9, 10, and 12 are available with hollow output shafts, see page 50-52.
Alloy steel slow speed shafts available.

DIMENSIONS:

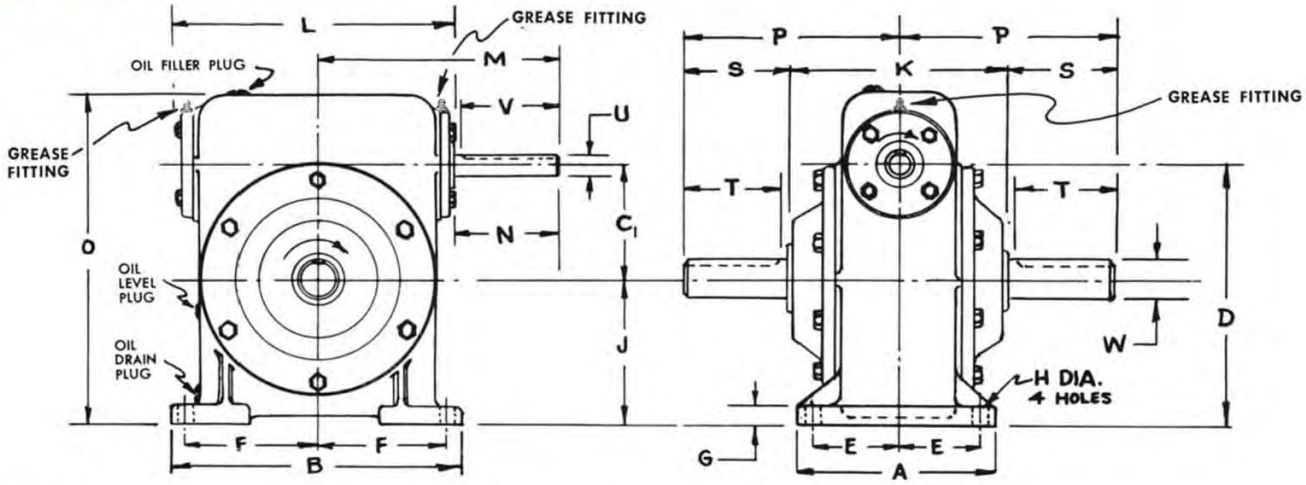

SPEED REDUCER DIMENSIONS (in inches) Refer to D Line for these sizes.

Unit	A	B	C_1	D	E	F	G	H	J	K	L	M	O	P	High Speed Shaft U*	N	V	Keyway	Slow Speed Shaft W*	S	T	Keyway
1	3½	5	1.33	3⅓	1⅜	2⅛	⅜	9/32	2	4	4⅞	4⅛	5¼	4	½	1 11/16	1½	⅛ × 1/16	⅝	2	1¾	3/16 × 3/32
2	4⅜	5½	1¾	4 3/16	1¾	2 5/16	½	13/32	2 7/16	4¾	5¾	4¾	6	4½	⅝	1⅞	1¾	3/16 × 3/32	¾	2⅛	2	3/16 × 3/32
3	4¾	6	2	4⅝	1⅞	2½	½	13/32	2⅝	4¾	5¾	4¾	6¼	4¾	⅝	1⅞	1¾	3/16 × 3/32	⅞	2⅜	2¼	3/16 × 3/32
4	4¾	7½	2⅝	6⅛	1⅞	3¼	½	13/32	3½	5⅜	7⅞	6	8⅜	5⅜	¾	2 1/16	2	3/16 × 3/32	1	2 11/16	2½	¼ × ⅛
5	6	8¼	3	7	2⅜	3½	⅝	9/16	4	6	8⅜	6½	9⅝	5⅞	⅞	2 5/16	2¼	3/16 × 3/32	1¼	2⅞	2¾	¼ × ⅛
6	6¼	9¼	3½	8	2⅝	4⅛	⅝	9/16	4½	7¼	9¼	7 1/16	11	7	1	2 7/16	2½	¼ × ⅛	1½	3⅜	3¼	⅜ × 3/16
7	7	11	4	9	2⅞	4⅞	⅝	9/16	5	7¼	11	8	13	7½	1	2½	2½	¼ × ⅛	1¾	3⅞	3¾	⅜ × 3/16
8	8	12½	4.6	10.1	3¼	5½	¾	11/16	5½	9¼	12½	9	14½	8½	1⅛	2¾	2¾	¼ × ⅛	1¾	3⅞	3¾	⅜ × 3/16
9	8½	13½	5.167	11.167	3½	6	¾	11/16	6	9¼	13½	9½	16	9	1⅛	2¾	2¾	¼ × ⅛	2	4⅜	4¼	½ × ¼
10	10	15	6	13	4	6½	¾	13/16	7	10¼	15⅝	10¼	18½	9¾	1¼	2 11/16	2¾	¼ × ⅛	2¼	4⅝	4½	½ × ¼
11	10	16	6½	14	4	7	¾	13/16	7½	10¾	16⅛	10½	20	10½	1¼	2 11/16	2¾	¼ × ⅛	2½	5⅛	5	⅝ × 5/16
12	12½	18	7	15½	5	7½	1	1 1/16	8½	12¼	18½	12⅜	21½	11¾	1½	3⅜	3⅜	⅜ × 3/16	2¾	5⅝	5½	⅝ × 5/16
13	14½	19	7⅝	17	5¾	8	1	1 1/16	9⅜	14¾	20	13	23	13½	1½	3¼	3¼	⅜ × 3/16	3	6⅛	6	¾ × ⅜
14	16½	21	8⅛	18⅛	6¾	9	1¼	1 5/16	10	16⅜	23	15	25	15	1¾	3¾	3¾	⅜ × 3/16	3¼	6⅝	6½	¾ × ⅜
15	19	23	9	22	7½	8¼	1¾	1 5/16	13	18	26⅝	17⅜	29 13/16	16¼	2	4⅜	4¼	½ × ¼	3¾	7¼	7	⅞ × 7/16

*Shaft diameter tolerances + .000 – .001. For construction purposes send for Certified Dimension Sheets.

PARTS LIST:

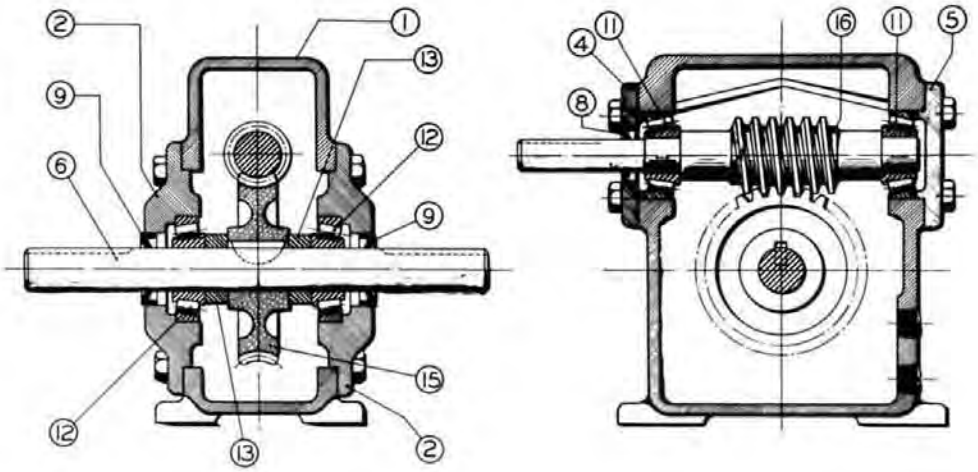

PARTS INDEX

Part No.	Description	Part. No.	Description
1	Housing	*11	Roller Bearing — High Speed
2	Slow Speed Cover — Open	12	Roller Bearing — Slow Speed
3	Slow Speed Cover — Closed — Not Shown	13	Slow Speed Spacer (Not used on #2CT)
4	High Speed Cover — Open	15	Slow Speed Worm Gear — Bronze
5	High Speed Cover — Closed	16	High Speed Worm and Shaft Integral
5A	High Speed Adapter — Not Shown — Units 10 thru 15 Incl. Used With H. S. Cover Closed	26	High Speed Lock Nut — Not Shown — Used On Units 10 thru 15 Incl.
6	Slow Speed Shaft — Double Extension		
7	Slow Speed Shaft — Single Extension — Not Shown		
8	Oil Seal — High Speed		
9	Oil Seal — Slow Speed		

* Series 1 thru 9 Uses 2 Single Row Bearings. Series 10 Thru 15 Uses 1 Single Row and 1 Two Row Bearing.

SHAFT ARRANGEMENTS:

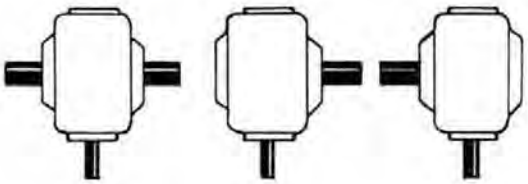

ASSEMBLY LR — OPTIONAL

ASSEMBLY R — STANDARD

ASSEMBLY L — STANDARD

(A) When facing High Speed Shaft, Slow Speed Shaft is to left (L), or right (R) or both (LR).

(B) No extra charge for the standard assemblies provided the shaft extensions are of standard length.

(C) The input shaft may be driven in either direction.

(D) Units may be mounted in either position, (ceiling, sidewall, etc.), if specified when ordered.

single reduction

SERIES: CV

GEAR RATIOS AVAILABLE 5:1 THRU 60:1
COMPLETE TORQUE AND HP RATINGS ..... PAGES 122-150
OVERHUNG LOAD RATINGS ..... PAGES 123-223
SERVICE FACTORS ..... PAGE 230
COUPLING ADAPTERS ..... PAGE 120
HYDRAULIC MOTOR ADAPTERS ..... PAGE 116

TABLE OF WEIGHTS

Unit	1	2	3	4	5	6	7	8	9	10	11	12	13	14	15
Net Weight	10	18	20	36	49	69	90	125	180	270	344	430	588	815	1075

Alloy steel slow speed shafts available.

DIMENSIONS:

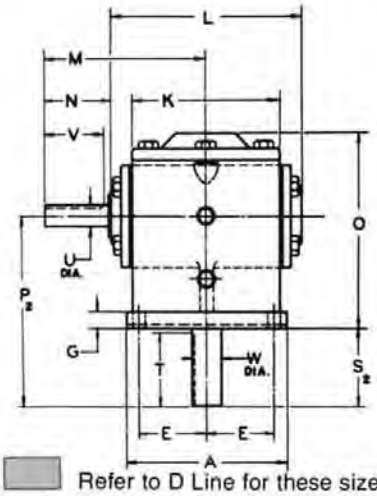

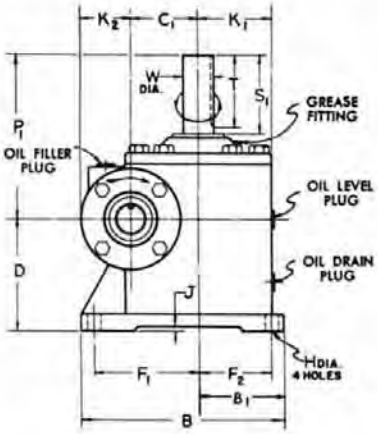

SPEED REDUCER DIMENSIONS (in inches) Refer to D Line for these sizes.

Unit	A	B	B_1	C_1	D	E	F_1	F_2	G	H	J	K	K_1	K_2	L	M	O	P_1	P_2	High Speed Shaft U*	N	V	Keyway	Slow Speed Shaft W*	S_1	S_2	T	Keyway
1	4 3/4	4 3/4	2	1.33	2 1/4	1 3/4	2 3/8	1 5/8	3/8	5/32	1/8	3 3/8	1 11/16	1 5/8	4 7/8	4 1/8	4 3/8	4	4	1/2	1 11/16	1 1/2	1/8 × 1/16	3/8	1 5/8	1 3/4	1 3/4	3/16 × 3/32
2	4 3/4	5 3/4	2 1/2	1 3/4	2 13/16	2	2 7/8	2 1/8	1/2	13/32	1/8	4 5/16	2 3/16	1 1/2	5 3/4	4 3/4	5 1/16	4 1/2	4 13/16	5/8	1 7/8	1 3/4	3/16 × 3/32	3/4	2 1/8	2	2	3/16 × 3/32
3	4 3/4	6	2 1/2	2	3 1/4	2	3 1/8	2 1/8	1/2	13/32	1/8	4 5/16	2 3/16	1 1/2	5 3/4	4 3/4	5 5/8	4 3/4	5 1/2	5/8	1 7/8	1 3/4	3/16 × 3/32	3/8	2 3/8	2 1/4	2 1/4	3/16 × 3/32
4	6 1/4	7 1/2	3 1/2	2 5/8	3 5/8	2 7/8	3 7/8	2 7/8	1/2	13/32	3/16	5 7/8	2 15/16	1 7/8	7 7/8	6	6 3/4	5 3/8	6 1/8	3/4	2 1/16	2	3/16 × 3/32	1	2 11/16	2 1/2	2 1/2	1/4 × 1/8
5	7 1/4	8 3/4	3 3/4	3	3 3/4	3 1/8	4 1/2	3 1/4	5/8	3/16	1/8	6 5/8	3 3/8	2	8 7/8	6 1/2	6 3/4	5 7/8	6 1/2	7/8	2 5/16	2 1/4	3/16 × 3/32	1 1/4	2 7/8	2 3/4	2 3/4	1/4 × 1/8
6	8	10	4 1/4	3 1/2	4	3 1/2	5 1/4	3 3/4	5/8	3/16	3/16	7 1/2	3 3/4	2 3/16	9 1/4	7 1/16	7 5/8	7	7 1/4	1	2 7/16	2 1/2	1/4 × 1/8	1 1/2	3 3/8	3 1/4	3 1/4	3/8 × 3/16
7	9 1/2	10 7/8	4 3/4	4	4 1/2	4 1/8	5 1/2	4 1/8	3/8	3/16	0	8 9/16	4 5/16	2 3/16	11	8	8 1/8	7 1/2	8 1/4	1	2 1/2	2 1/2	1/4 × 1/8	1 3/4	3 7/8	3 3/4	3 3/4	3/8 × 3/16
8	11 1/2	12 1/2	5 3/4	4.6	5	5	6	5	3/4	11/16	3/16	10 1/4	5 1/8	2 3/16	12 1/2	9	9 5/8	8 1/2	8 3/4	1 1/8	2 3/4	2 3/4	1/4 × 1/8	1 3/4	3 7/8	3 3/4	3 3/4	3/8 × 3/16
9	12 1/2	16 3/4	7 1/2	5.167	5 1/2	5 1/2	8 1/2	6 3/4	3/4	11/16	3/16	11 3/8	6	2 5/8	13 1/2	9 1/2	10 3/8	9	9 3/4	1 1/8	2 3/4	2 3/4	1/4 × 1/8	2	4 3/8	4 1/4	4 1/4	1/2 × 3/4
10	14	20 1/2	8 1/2	6	6	6	11	7 1/2	3/4	13/16	1/4	12 7/8	6 7/16	4 1/16	15 5/16	10 1/4	11 1/8	9 3/4	10 1/2	1 1/4	2 11/16	2 3/4	1/4 × 1/8	2 1/4	4 3/8	4 1/2	4 1/2	1/2 × 3/4
11	14 1/2	22	9 5/8	6 1/2	7	6 1/4	11 3/8	8 5/8	3/4	13/16	3/16	13 1/2	7 11/16	3 11/16	16 1/8	10 1/2	12 7/8	10 1/2	12	1 1/4	2 11/16	2 3/4	1/4 × 1/8	2 1/2	5 1/8	5	5	3/8 × 3/16
12	17 1/2	25	11 1/4	7	8	7 1/2	12 1/2	10	1	1 1/16	3/16	15 3/4	8 3/4	4 1/4	18 1/2	12 3/8	14 1/8	11 3/4	13 1/2	1 1/2	3 3/8	3 3/8	3/8 × 3/16	2 3/4	5 5/8	5 1/2	5 1/2	3/8 × 3/16
13	19	27	12	7 5/8	9	8	13 1/2	10 1/2	1	1 1/16	3/16	17 1/4	9 1/2	4 7/8	20	13	16 3/8	13 1/2	15	1 1/2	3 1/4	3 1/4	3/8 × 3/16	3	6 1/8	6	6	3/4 × 3/8
14	22 1/2	30	13	8 1/8	10	9 3/4	15 1/2	11 1/2	1 1/4	1 5/16	1/4	20	10	5 1/8	23	15	18 3/8	15	16 1/2	1 3/4	3 3/4	3 3/4	3/8 × 3/16	3 1/4	6 5/8	6 1/2	6 1/2	3/4 × 3/8
15	25 1/2	30	15	9	10 1/2	11	13 1/4	13 1/4	1 3/8	1 5/16	1/4	23	11 1/2	4 1/2	26 5/8	17 3/8	19 1/2	16 1/4	17 1/2	2	4 3/8	4 1/4	1/2 × 1/4	3 3/4	7 1/4	7	7	7/8 × 3/4

*Shaft diameter tolerances + .000 – .001. For construction purposes send for Certified Dimension Sheets.

PARTS LIST:

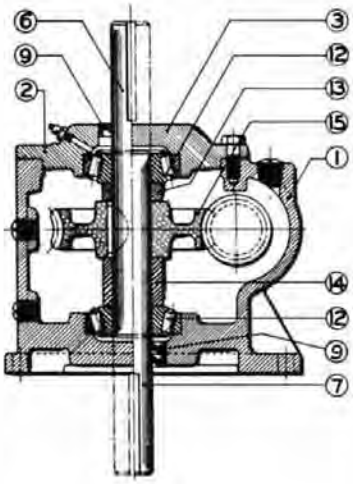

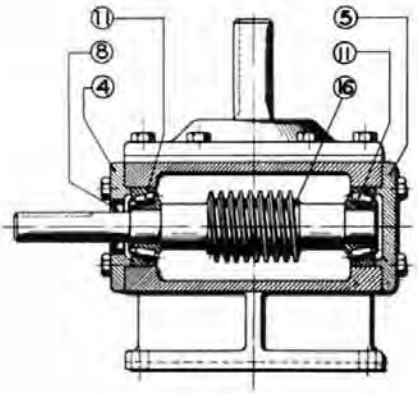

PARTS INDEX

Part No.	Description
1	Housing
2	Slow Speed Cover — Open
3	Slow Speed Cover — Closed
4	High Speed Cover — Open
5	High Speed Cover — Closed
5A	High Speed Adapter — Not Shown — Used With H. S. Cover Closed Units 10 thru 15 Incl.
6	Slow Speed Shaft — Top Extension
7	Slow Speed Shaft — Bottom Extension
8	Oil Seal — High Speed
9	Oil Seal — Slow Speed
*11	Roller Bearing — High Speed
12	Roller Bearing — Slow Speed
13	Slow Speed Spacer — Short (Not used on #2CV)
14	Slow Speed Spacer — Long
15	Slow Speed Worm Gear — Bronze
16	High Speed Worm and Shaft Integral
26	High Speed Lock Nut — Not Shown — Used On Units 10 thru 15 Incl.

* Series 1 Thru 9 Uses 2 Single Row Bearings. Series 10 Thru 15 Uses 1 Single and 1 Two Row Bearing.

SHAFT ARRANGEMENTS:

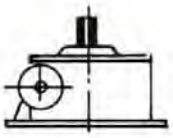

ASSEMBLY RU

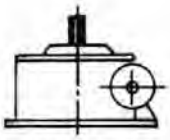

ASSEMBLY LU

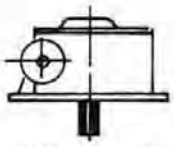

ASSEMBLY RD

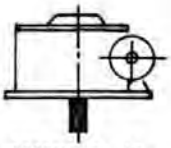

ASSEMBLY LD

(A) The reducer is viewed looking at the high speed shaft.

(B) No extra charge for these assemblies provided the shaft extensions are of standard length.

Top and bottom shaft extensions can be supplied at additional charge.

(C) The input shaft may be driven in either direction.

(D) Units may be mounted in any position, (ceiling, sidewall, etc.), if specified when ordered.

single reduction — fan cooled

SERIES: FCT

GEAR RATIOS AVAILABLE 5:1 THRU 60:1

COMPLETE TORQUE AND HP RATINGS ..... PAGES 122-150
OVERHUNG LOAD RATINGS ..... PAGES 123-223
SERVICE FACTORS ..... PAGE 230
COUPLING ADAPTERS ..... PAGE 120
HYDRAULIC MOTOR ADAPTERS ..... PAGE 116

Unit	1	2	3	4	5	6	7	8	9	10	11	12	13	14	15
Net Weight	13½	21	23	43	56	74	102	144	165	237	286	378	478	681	1110

Units #3, 4, 5, 6, 7, 8, 9, 10, and 12 are available with hollow output shafts, see page 54-56.
Alloy steel slows speed shafts available.

DIMENSIONS:

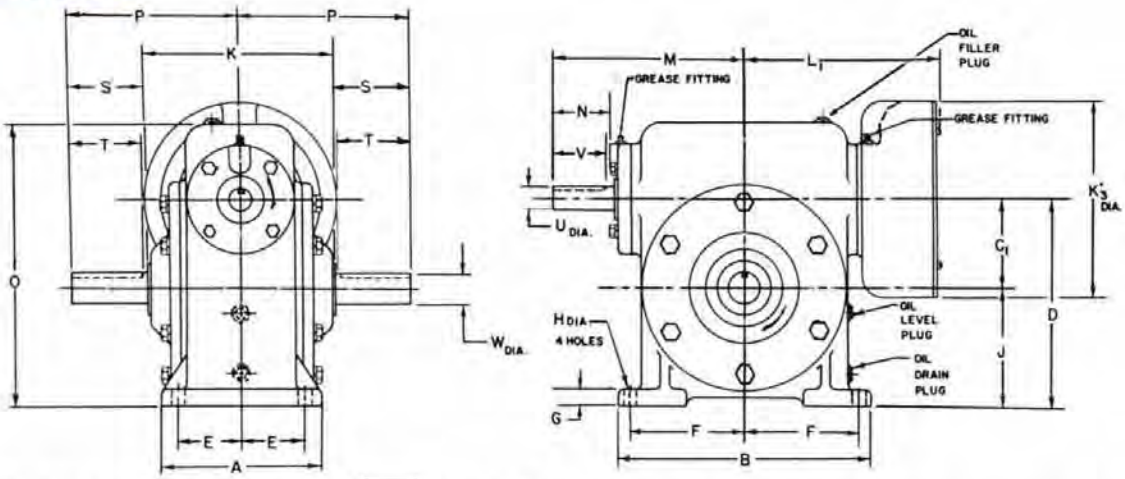

SPEED REDUCER DIMENSIONS (in inches) Refer to D Line for these sizes.

Unit	A	B	C_1	D	E	F	G	H	J	K	K_3 Dia.	L_1	M	O	P	High Speed Shaft *U	N	V	Keyway	Slow Speed Shaft W*	S	T	Keyway
1FCT	3½	5	1.33	3⅓	1⅜	2⅛	⅜	9/32	2	4	4	4 1/16	4⅛	5¼	4	½	1 11/16	1½	⅛ × 1/16	⅝	2	1¾	3/16 × 3/32
2FCT	4⅜	5½	1¾	4 3/16	1¾	2 5/16	½	13/32	2 7/16	4¾	4½	4⅝	4¾	6	4½	⅝	1⅞	1¾	3/16 × 3/32	¾	2⅛	2	3/16 × 3/32
3FCT	4¾	6	2	4⅝	1⅞	2½	½	13/32	2⅜	4¾	4½	4⅝	4¾	6¼	4¾	⅝	1⅞	1¾	3/16 × 3/32	⅞	2⅜	2¼	3/16 × 3/32
4FCT	4¾	7½	2⅝	6⅛	1⅞	3¼	½	13/32	3½	5⅜	5¾	5 13/16	6	8⅜	5⅜	¾	2 1/16	2	3/16 × 3/32	1	2 11/16	2½	¼ × ⅛
5FCT	6	8¼	3	7	2⅜	3½	⅝	9/16	4	6	6	6¼	6½	9⅝	5⅞	⅞	2 9/16	2¼	3/16 × 3/32	1¼	2⅞	2¾	¼ × ⅛
6FCT	6¼	9¼	3½	8	2⅝	4⅛	⅝	9/16	4½	7¼	6½	6 11/16	7⅛	11	7	1	2½	2½	¼ × ⅛	1½	3⅜	3¼	⅜ × 3/16
7FCT	7	11	4	9	2⅞	4⅞	⅝	9/16	5	7¼	8	7 9/16	8	13	7½	1	2½	2½	¼ × ⅛	1¾	3⅞	3¾	⅜ × 3/16
8FCT	8	12½	4.6	10.1	3¼	5½	¾	11/16	5½	9¼	9¼	8 5/16	9	14½	8½	1⅛	2¾	2¾	¼ × ⅛	1¾	3⅞	3¾	⅜ × 3/16
9FCT	8½	13½	5.167	11.167	3½	6	¾	11/16	6	9¼	9¼	8 13/16	9½	16	9	1⅛	2¾	2¾	¼ × ⅛	2	4⅜	4¼	½ × ¼
10FCT	10	15	6	13	4	6½	¾	13/16	7	10¼	10¼	10½	10¼	18½	9¾	1¼	2 11/16	2¾	¼ × ⅛	2¼	4⅝	4½	½ × ¼
11FCT	10	16	6½	14	4	7	¾	13/16	7½	10¾	10¼	10¾	10½	20	10½	1¼	2 11/16	2¾	¼ × ⅛	2½	5⅛	5	⅝ × 5/16
12FCT	12½	18	7	15½	5	7½	1	1 1/16	8½	12¼	12¼	12 7/16	12⅜	21½	11¾	1½	3¼	3¼	⅜ × 3/16	2¾	5⅝	5½	⅝ × 5/16
13FCT	14½	19	7⅜	17	5¾	8	1	1 1/16	9⅜	14¾	14¾	13¾	13	23	13½	1½	3¼	3¼	⅜ × 3/16	3	6⅛	6	¾ × ⅜
14FCT	16½	21	8⅛	18⅛	6¾	9	1¼	1 5/16	10	16¾	16¾	15⅝	15	25	15	1¾	3¾	3¾	⅜ × 3/16	3¼	6⅝	6½	¾ × ⅜
15FCT	19	23	9	22	7½	8¼	1¾	1 5/16	13	18	16¾	17⅝	17⅜	29 13/16	16¼	2	4⅜	4¼	½ × ¼	3¾	7¼	7	⅞ × 7/16

*Shaft diameter tolerances +.000 −.001. For construction purposes send for Certified Dimension Sheets.

PARTS LIST:

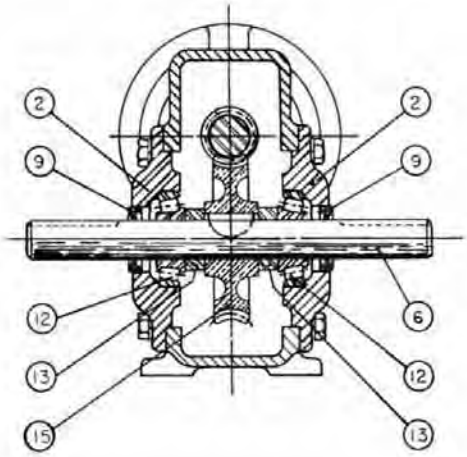

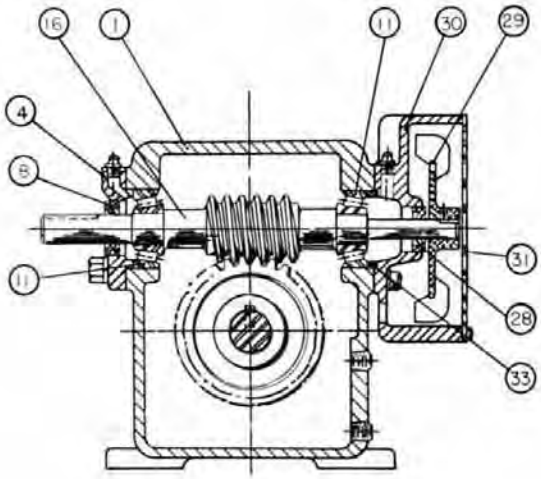

PARTS INDEX

Part No.	Description
1	Housing
2	Slow Speed Cover — Open
3	Slow Speed Cover — Closed — Not Shown
4	High Speed Cover — Open
** 5A	High Speed Adapter Cap—Sizes 10-15 only—Not Shown
6	Slow Speed Shaft — Double Extension
7	Slow Speed Shaft — Single Extension — Not Shown
8	Oil Seal — High Speed — Shaft Extension End
9	Oil Seal — Slow Speed
*11	Roller Bearings — High Speed
12	Roller Bearings — Slow Speed
13	Slow Speed Spacer (Not used on #2FCT)
15	Slow Speed Worm Gear — Bronze
16	High Speed Worm and Shaft Integral
26	High Speed Locknut • Not Shown Used on Units 10 thru 15 only
28	Oil Seal — High Speed — Fan End
29	Fan
30	Fan Housing and Cap
31	Fan Housing Cover
33	High Speed Adjustment Spacer—Units 1 thru 9 only

*Series 1 thru 9 Uses 2 Single Row Bearings. Series 10 thru 15 Uses 1 Single and 1 Two Row Bearing.
**Used With Fan Housing and Cap.

SHAFT ARRANGEMENTS:

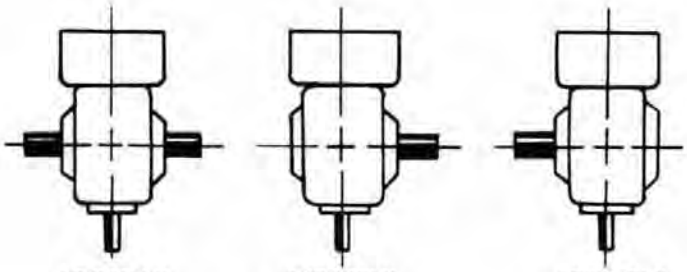

ASSEMBLY LR — OPTIONAL

ASSEMBLY R — STANDARD

ASSEMBLY L — STANDARD

(A) When facing High Speed Shaft, Slow Speed Shaft is to left (L), or right (R) or both (LR).

(B) No extra charge for the standard assemblies provided the shaft extensions are of standard length.

(C) The input shaft may be driven in either direction.

(D) Units may be mounted in any position, (ceiling, sidewall, etc.), if specified when ordered.

single reduction—fan-cooled

SERIES: FCV

GEAR RATIOS AVAILABLE 5:1 THRU 60:1
COMPLETE TORQUE AND HP RATINGS ..... PAGES 122-150
OVERHUNG LOAD RATINGS ..... PAGES 123-223
SERVICE FACTORS ..... PAGE 230
COUPLING ADAPTERS ..... PAGE 120
HYDRAULIC MOTOR ADAPTERS ..... PAGE 116

TABLE OF WEIGHTS

Unit	1	2	3	4	5	6	7	8	9	10	11	12	13	14	15
Net Weight	13	21	23	41	54	75	98	134	190	282	357	447	611	845	1205

Alloy steel slow speed shafts available.

DIMENSIONS:

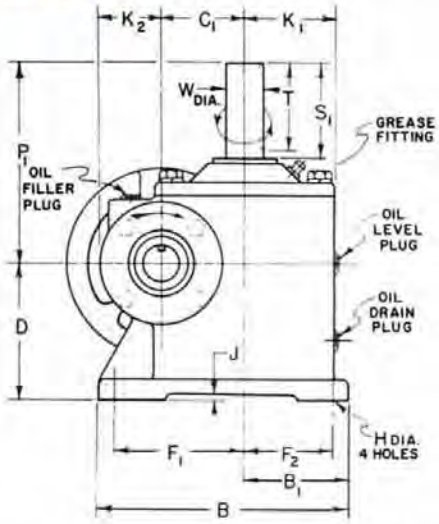

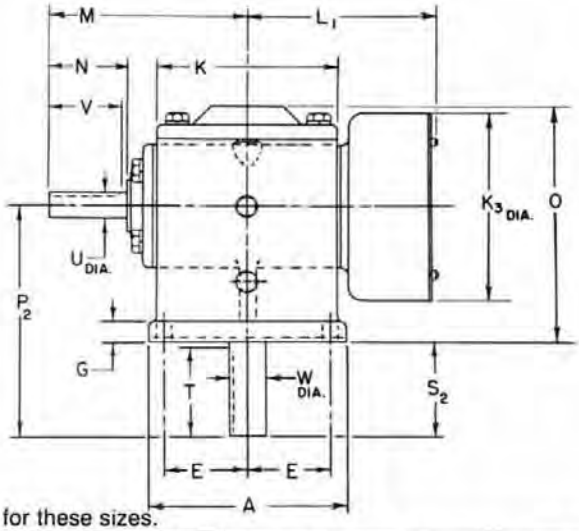

SPEED REDUCER DIMENSIONS (in inches) Refer to D Line for these sizes.

Unit	A	B	B_1	C_1	D	E	F_1	F_2	G	H	J	K	K_1	K_2	K_3 Dia.	L_1	M	O	P_1	P_2	High Speed Shaft U*	N	V	Keyway	Slow Speed Shaft W*	S_1	S_2	T	Keyway
1FCV	4¼	4¾	2	1.33	2¼	1¾	2⅜	1⅝	⅜	9/32	⅛	3⅜	1 11/16	1 5/16	4	4 1/16	4⅛	4⅜	4	4	½	1 11/16	1½	⅛ x 1/16	⅝	1⅞	1¾	1⅜	3/16 x 3/32
2FCV	4¾	5¾	2½	1¾	2 13/16	2	2⅞	2⅛	½	13/32	⅛	4 5/16	2 3/16	1½	4½	4⅝	4¾	5 3/16	4½	4 13/16	⅝	1⅞	1¾	3/16 x 3/32	¾	2⅛	2	2	3/16 x 3/32
3FCV	4¾	6	2½	2	3¼	2	3⅛	2⅛	½	13/32	⅛	4 5/16	2 3/16	1½	4½	4⅝	4¾	5⅝	4¾	5½	⅝	1⅞	1¾	3/16 x 3/32	⅞	2⅜	2¼	2¼	3/16 x 3/32
4FCV	6¾	7½	3¼	2⅝	3⅝	2⅞	3⅞	2⅞	½	13/32	3/16	5⅞	2 15/16	1⅝	5¾	5 13/16	6	6 5/16	5⅜	6⅛	¾	2 1/16	2	3/16 x 3/32	1	2 11/16	2½	2½	¼ x ⅛
5FCV	7¼	8¾	3¾	3	3¾	3⅛	4½	3¼	⅝	9/16	⅛	6¾	3⅜	2	6	6¼	6½	6¾	5⅞	6½	⅞	2 5/16	2¼	3/16 x 3/32	1¼	2⅞	2¾	2¾	¼ ⅛
6FCV	8	10	4¼	3½	4	3½	5¼	3¾	⅝	9/16	3/16	7½	3¾	2 3/16	6½	6 11/16	7 1/16	7⅝	7	7¼	1	2 7/16	2½	¼ x ⅛	1½	3⅜	3¼	3¼	⅜ x 3/16
7FCV	9½	10⅞	4¾	4	4½	4⅛	5½	4⅛	⅝	9/16	0	8 9/16	4 5/16	2 3/16	6½	7 9/16	8	8⅛	7½	8¼	1	2½	2½	¼ x ⅛	1¾	3⅞	3¾	3¾	⅜ x 3/16
8FCV	11½	12½	5¾	4.6	5	5	6	5	¾	11/16	5/16	10¼	5⅛	2 3/16	6½	8 5/16	9	9⅝	8½	8¾	1⅛	2¾	2¾	¼ x ⅛	1¾	3⅞	3¾	3¾	⅜ x 3/16
9FCV	12½	16¾	7½	5.167	5½	5½	8½	6¾	¾	11/16	3/16	11⅝	6	2⅝	9¼	8 13/16	9½	10⅛	9	9¾	1⅛	2¾	2¾	¼ x ⅛	2	4⅜	4¼	4¼	½ x ¼
10FCV	14	20½	8½	6	6	6	11	7½	¾	13/16	¼	12⅞	6 7/16	4 1/16	10¼	10½	10¼	11⅛	9¾	10½	1¼	2 11/16	2¾	¼ x ⅛	2¼	4⅝	4½	4½	½ x ¼
11FCV	14½	22	9⅝	6½	7	6¼	11⅜	8⅝	¾	13/16	3/16	13½	7 11/16	3 13/16	10¼	10¾	10½	12⅜	10½	12	1¼	2 11/16	2¾	¼ x ⅛	2½	5⅛	5	5	⅝ x 5/16
12FCV	17½	25	11¼	7	8	7½	12½	10	1	1 1/16	3/16	15¾	8¾	4¼	12¼	12⅜	12⅜	14⅛	11¾	13½	1½	3⅜	3¼	⅜ x 3/16	2¾	5⅝	5½	5½	⅝ x 5/16
13FCV	19	27	12	7⅝	9	8	13½	10½	1	1 1/16	5/16	17¼	9½	4⅞	14¾	13¾	13	16⅜	13½	15	1½	3¼	3¼	⅜ x 3/16	3	6⅛	6	6	¾ x ⅜
14FCV	22½	30	13	8⅛	10	9¾	15½	11½	1¼	1 5/16	¼	20	10	6⅞	16¾	15⅝	15	18⅜	15	16½	1¾	3¾	3¾	⅜ x 3/16	3¼	6⅝	6½	6½	¾ x ⅜
15FCV	25½	30	15	9	10½	11	13¼	13¼	1⅜	1 5/16	¼	23	11½	4½	16¾	17⅝	17⅜	19½	16¼	17½	2	4⅜	4¼	½ x ¼	3¾	7¼	7	7	⅞ x 7/16

* Shaft diameter tolerances + .000 − .001. For construction purposes send for Certified Dimension Sheets.

PARTS LIST:

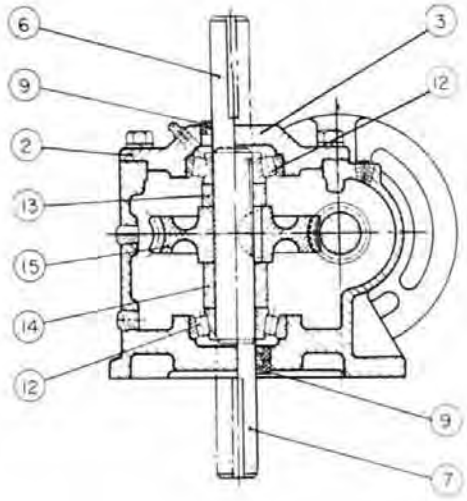

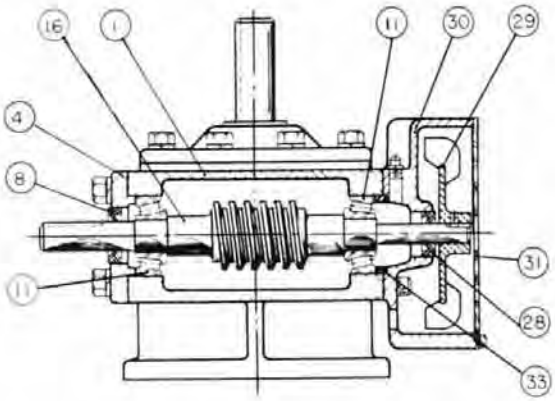

PARTS INDEX

Part No.	Description	Part No.	Description
1	Housing	12	Roller Bearings — Slow Speed
2	Slow Speed Cover — Open	13	Slow Speed Spacer — Short (Not used on #2FCV)
3	Slow Speed Cover — Closed	14	Slow Speed Spacer — Long
4	High Speed Cover — Open	15	Slow Speed Worm Gear — Bronze
**5A	High Speed Adapter Cap—sizes 9 thru 15 only—Not Shown	16	High Speed Worm and Shaft Integral
6	Slow Speed Shaft — Top Extension	26	High Speed Locknut • Not Shown Used on Units 10 thru 15 only
7	Slow Speed Shaft — Bottom Extension	28	Oil Seal — High Speed — Fan End
8	Oil Seal High Speed — Shaft Extension End	29	Fan
9	Oil Seal — Slow Speed	30	Fan Housing and Cap
*11	Roller Bearings — High Speed	31	Fan Housing Cover
		33	High Speed Adjustment Spacer

*Series 1 thru 9 uses 2 Single Row Bearings
Series 10 thru 15 uses 1 Single & 1 Double Row Bearing
**Used With Fan Housing and Cap.

SHAFT ARRANGEMENTS:

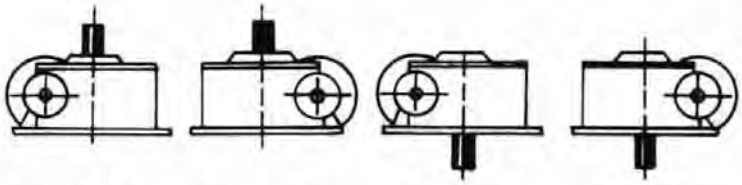

ASSEMBLY RU ASSEMBLY LU ASSEMBLY RD ASSEMBLY LD

(A) The Reducer is viewed looking at the high speed shaft.

(B) No extra charge for these assemblies provided the shaft extensions are of standard length.

(C) The input shaft may be driven in either direction.

(D) Units may be mounted in any position, (ceiling, sidewall, etc.), if specified when ordered.

single reduction — motorized and gearmotor

SERIES: MCT-MCTW (WITH MOTOR)

GEAR RATIOS AVAILABLE 5:1 THRU 60:1

COMPLETE TORQUE AND HP RATINGS ..... PAGES 122-150
OVERHUNG LOAD RATINGS ..... PAGES 123-223
SERVICE FACTORS ..... PAGE 230
COUPLING ADAPTERS ..... PAGE 120
HYDRAULIC MOTOR ADAPTERS ..... PAGE 116

TABLE OF WEIGHTS

Unit	1	2	3	4	5	6	7	8
Net Weight	14	22	21	36	53	67	94	130

Alloy steel slow speed shafts available.
Units #3, 4, 5, 6, 7, and 8 are available with hollow output shafts, see page 58-60.

See page 120.

DIMENSIONS:

Dimensions apply to speed reducer only. For motor dimensions see next page.

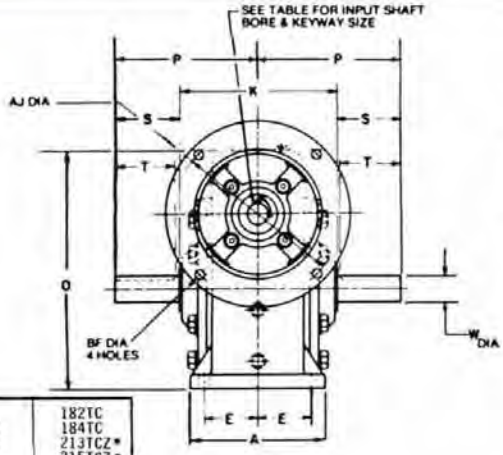

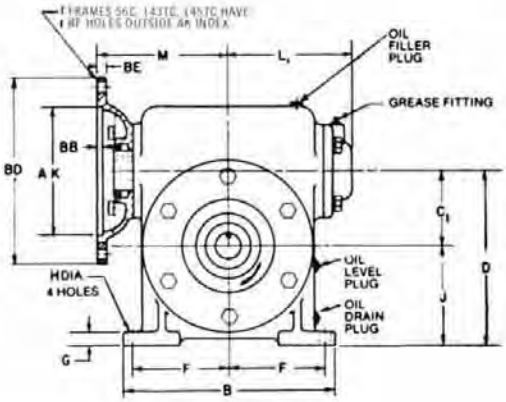

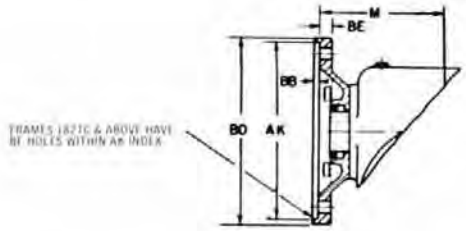

FRAME, KEYWAY and BORE DIMENSIONS

Frame No.	56C	143TC 145TC	182TC 184TC 213TCZ* 215TCZ*
AJ	5⅞	5⅞	7¼
AK	4½	4½	8½
BB	3/16	3/16	3/16
BD	6½	6½	9
BE	5/16	5/16	⅜
BF	13/32	13/32	17/32
Keyway	3/16 x 3/32	3/16 x 3/32	¼ x ⅛
Bore +.001 −.000	.6255	.8755	1.1255*

Refer to D Line for these sizes.

SPEED REDUCER DIMENSIONS (in inches)

Unit No.	A	B	C_1	D	E	F	G	H*	J	K	L_1	M	O	P	Slow Speed Dimensions W*	S	T	Keyway	Maximum Frame Size
**1MCTR	4	5	1.33	3.33	1⅝	2⅛	⅜	9/32	2	4	3 9/16	3⅝	4⅝	4	.625	2	1¾	3/16x3/32	56C
**2MCTR	4⅜	5½	1¾	4 3/16	1¾	2 5/16	½	13/32	2 7/16	4¾	3 9/16	3⅞	6	4½	.750	2⅛	2	3/16x3/32	145TC-184C
3MCT	4¾	6	2	4⅝	1⅞	2½	½	13/32	2⅝	4¾	3 9/16	3⅞	6¼	4¾	.875	2⅜	2¼	3/16x3/32	145TC-184C
4MCT	4¾	7½	2⅝	6⅛	1⅞	3¼	½	13/32	3½	5⅜	4¼	4½	8⅜	5⅜	1.000	2 11/16	2½	¼x⅛	145TC-184C
5MCT	6	8¼	3	7	2⅜	3½	⅝	9/16	4	6	4½	5⅛	9⅝	5⅞	1.250	2⅞	2¾	¼x⅛	184TC-215C
6MCT	6¼	9¼	3½	8	2⅝	4⅛	⅝	9/16	4½	7¼	5	5½	11	7	1.500	3⅜	3¼	⅜x3/16	184TC-215C
7MCT	7	11	4	9	2⅞	4⅞	⅝	9/16	5	7¼	5⅞	6⅜	13	7½	1.750	3⅞	3¾	⅜x3/16	184TC-215C
8MCT	8	12½	4.6	10.1	3¼	5½	¾	11/16	5½	9¼	6⅝	7⅛	14½	8½	1.750	3⅞	3¾	⅜x3/16	184TC-215C

*Slow speed shaft diameter tolerance + .000—.001. For construction purposes, send for certified dimension sheets.
**Models 1MCTR and 2MCTR; models 3MCT thru 8MCT, as shown.
**Models 1MCT and 2MCT have footless housings. Consult factory.

MOTOR DIMENSIONS:

H.P. @ 1800 RPM	1/6		1/4		1/3		1/2		3/4		1	1 1/2	2	3	5
Phase	Single *	Three	Single *	Three	Single *	Three	Single *	Three	Single *	Three	Three	Three	Three	Three	Three
AG	7 1/2	7 1/2	7 3/4	8 1/4	8 1/4	8 3/4	8 3/4	8 3/4	9 1/4	9 1/4	9 3/4	10 3/4	10 3/4	12 1/4	13 3/4
AP	5 21/32	5 21/32	5 21/32	5 21/32	6 31/64	6 31/64	6 31/64	6 31/64	6 31/64	6 31/64	6 31/64	6 31/64	6 31/64	10 11/32	10 11/32

*Single phase motor is capacitor start. Dimensions as shown are for open dripproof enclosure. Motors can be furnished open dripproof or enclosed.

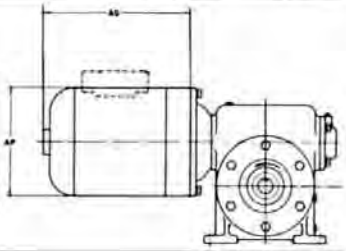

PARTS LIST:

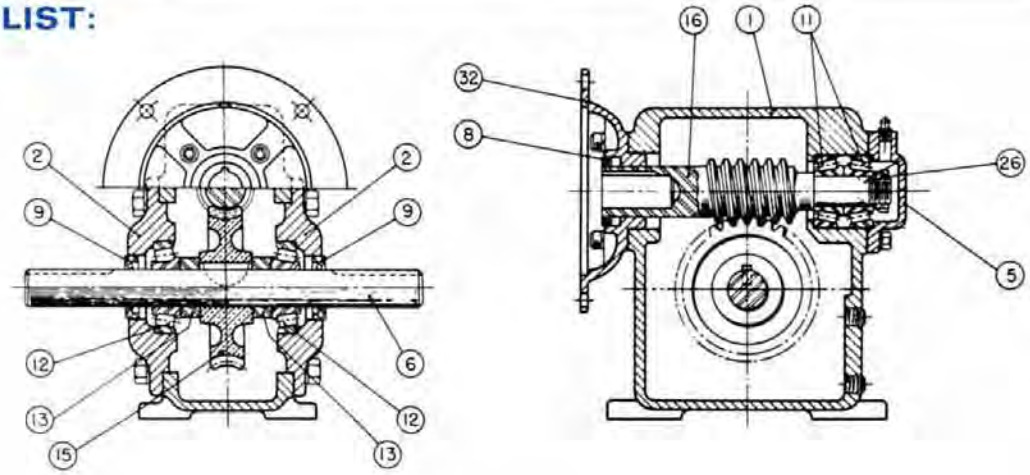

PARTS INDEX

Part No.	Description	Part No.	Description
1	Housing	11	Roller Bearings High Speed
2	Slow Speed Cover — Open	12	Roller Bearings Slow Speed
3	Slow Speed Cover — Closed Not Shown	13	Slow Speed Spacer (Not used on #2MCTR)
5	High Speed Cover — Closed	15	Slow Speed Worm Gear — Bronze
6	Slow Speed Shaft — Double Extension	16	High Speed Worm and Shaft Integral
7	Slow Speed Shaft — Single Extension Not Shown	26	High Speed Lock Nut
8	Oil Seal High Speed Motor Adapter End	32	Motor Adapter—4½" (AK) Register Dia.
9	Oil Seal Slow Speed	32A	Motor Adapter 8½" (AK) Register Dia.
		32B	Motor Adapter Spacer (Size 4 only)

SHAFT ARRANGEMENTS:

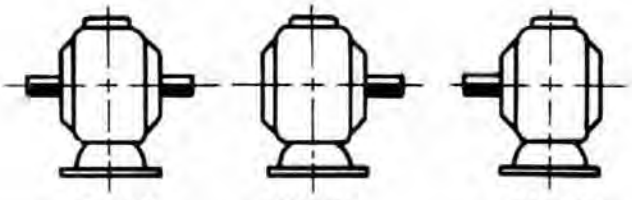

ASSEMBLY LR — OPTIONAL

ASSEMBLY R — STANDARD

ASSEMBLY L — STANDARD

(A) When facing the input shaft, slow speed shaft is to left (L), or right (R) or both (LR).

(B) No extra charge for the standard assemblies provided shaft extensions are of standard length.

(C) The input shaft may be driven in either direction.

(D) Units may be mounted in any position, (ceiling, sidewall, etc.), if specified when ordered.

WINSMITH

single reduction — motorized and gearmotor

SERIES: MCV-MCVW (WITH MOTOR)

GEAR RATIOS AVAILABLE 5:1 THRU 60:1

COMPLETE TORQUE AND HP RATINGS ..... PAGES 122-150
OVERHUNG LOAD RATINGS ..... PAGES 123-223
SERVICE FACTORS ..... PAGE 230
COUPLING ADAPTERS ..... PAGE 120
HYDRAULIC MOTOR ADAPTERS ..... PAGE 116

TABLE OF WEIGHTS

Unit	1	2	3	4	5	6	7	8
Net Weight	14	22	22	36	50	69	92	127

Alloy steel slow speed shafts available.
Hydraulic Motor Flanges available, see pages 116-118.
Units 1 through 15 available in "C" flange coupling type, see page 120.

CVMW
See page 120.

DIMENSIONS:

Dimensions apply to speed reducer only.
For motor dimensions see next page.

FRAME, KEYWAY and BORE DIMENSIONS

Frame No.	56C	143TC 145TC	182TC 184TC 213TCZ* 215TCZ*
AJ	5⅞	5⅞	7¼
AK	4½	4½	8½
BB	3/16	3/16	3/16
BD	6½	6½	9
BE	5/16	5/16	⅜
BF	13/32	13/32	17/32
Keyway	3/16 x 3/32	3/16 x 3/32	¼ x ⅛
Bore +.001 −.000	.6255	.8755	1.1255*

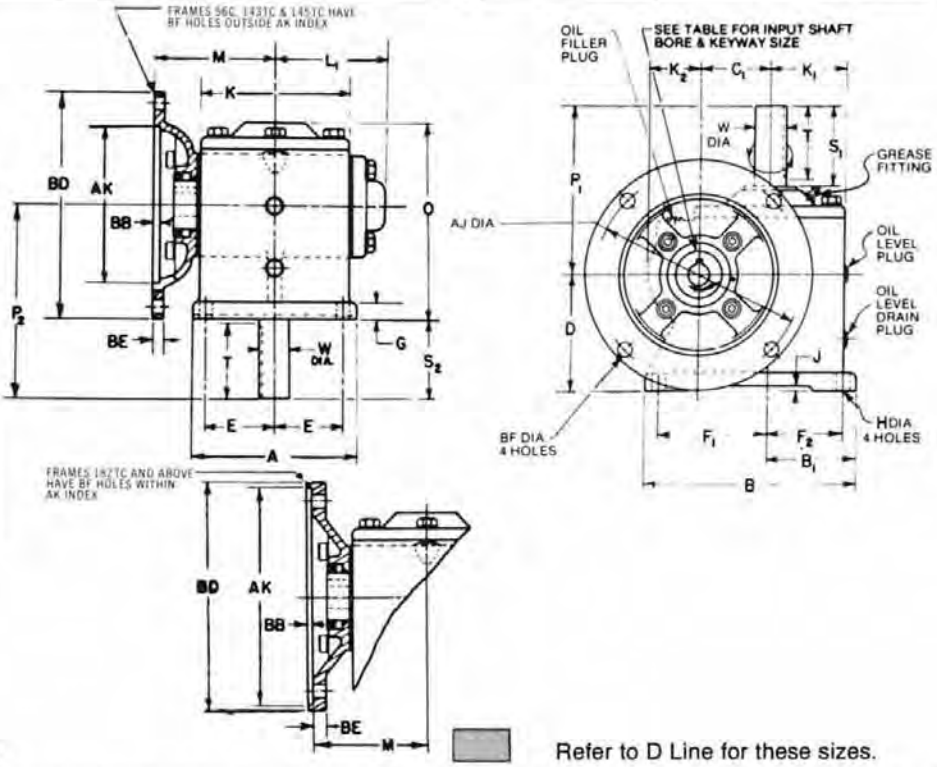

SPEED REDUCER DIMENSIONS (in inches)

Refer to D Line for these sizes.

Unit No.	A	B	B_1	C_1	D	E	F_1	F_2	G	H	J	K	K_1	K_2	L_1	M	O	P_1	P_2	Slow Speed Shaft Dimensions W*	S_1	S_2	T	Keyway	Maximum Frame Size
**1MCVR	4¼	4¾	2	1.33	2¼	1¾	2⅜	1⅝	⅜	9/32	⅛	3⅜	1 11/16	1 5/16	3 9/16	3⅝	4¼	4	4	.625	2	1¾	1¾	3/16x3/32	56C
**2MCVR	4¾	5¾	2½	1¾	2 13/16	2	2⅞	2⅛	½	13/32	⅛	4 5/16	2 3/16	1½	3 9/16	3⅞	5 3/16	4½	4 13/16	.750	2⅛	2	2	3/16x3/32	145TC-184C
3MCV	4¾	6	2½	2	3⅛	2	3⅛	2⅛	½	13/32	⅛	4 5/16	2 3/16	1½	3 9/16	3⅞	5⅝	4¾	5½	.875	2⅜	2¼	2¼	3/16x3/32	145TC-184C
4MCV	6¾	7½	3¼	2⅝	3⅝	2⅞	3⅞	2⅞	½	13/32	3/16	5⅞	2 15/16	1⅝	4¼	4½	6 9/16	5⅝	6⅛	1.000	2 11/16	2½	2½	¼x⅛	145TC-184C
5MCV	7¼	8¾	3¾	3	3¾	3⅛	4½	3¼	⅝	9/16	⅛	6¾	3⅜	2	4½	5⅛	6¾	5⅞	6½	1.250	2⅞	2¾	2¾	¼x⅛	184TC-215C
6MCV	8	10	4¼	3½	4	3½	5¼	3¾	⅝	9/16	3/16	7½	3¾	2 3/16	5	5½	7⅝	7	7¼	1.500	3⅜	3¼	3¼	3/8x3/16	184TC-215C
7MCV	9½	10⅞	4¾	4	4½	4⅛	5½	4⅛	⅝	9/16	0	8 9/16	4 5/16	2 3/16	5⅞	6⅜	8⅛	7½	8¼	1.750	3⅞	3¾	3¾	3/8x3/16	184TC-215C
8MCV	11½	12½	5¾	4.6	5	5	6	5	¾	11/16	5/16	10¼	5⅛	2 3/16	6⅝	7⅛	9⅝	8½	8¾	1.750	3⅞	3¾	3¾	3/8x3/16	184TC-215C

*Slow speed shaft diameter tolerance + .000—.001.
For construction purposes, send for certified dimension sheets.

**Models 1MCVR and 2MCVR; models 3MCV thru 8MCV, as shown.
**Models 1MCV and 2MCV have footless housings. Consult factory.

MOTOR DIMENSIONS:

H.P. @ 1800 RPM	1/6		1/4		1/3		1/2		3/4		1	1 1/2	2	3	5
Phase	Single *	Three	Single *	Three	Single *	Three	Single *	Three	Single *	Three	Three	Three	Three	Three	Three
AG	7 1/2	7 1/2	7 3/4	8 1/4	8 1/4	8 3/4	8 3/4	8 3/4	9 1/4	9 1/4	9 3/4	10 3/4	10 3/4	12 1/4	13 3/4
AP	5 21/32	5 21/32	5 21/32	5 21/32	6 31/64	6 31/64	6 31/64	6 31/64	6 31/64	6 31/64	6 31/64	6 31/64	6 31/64	10 11/32	10 11/32

*Single phase motor is capacitor start. Dimensions as shown are for open dripproof enclosure. Motors can be furnished open dripproof or enclosed.

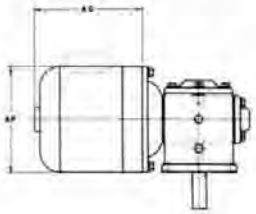

PARTS LIST:

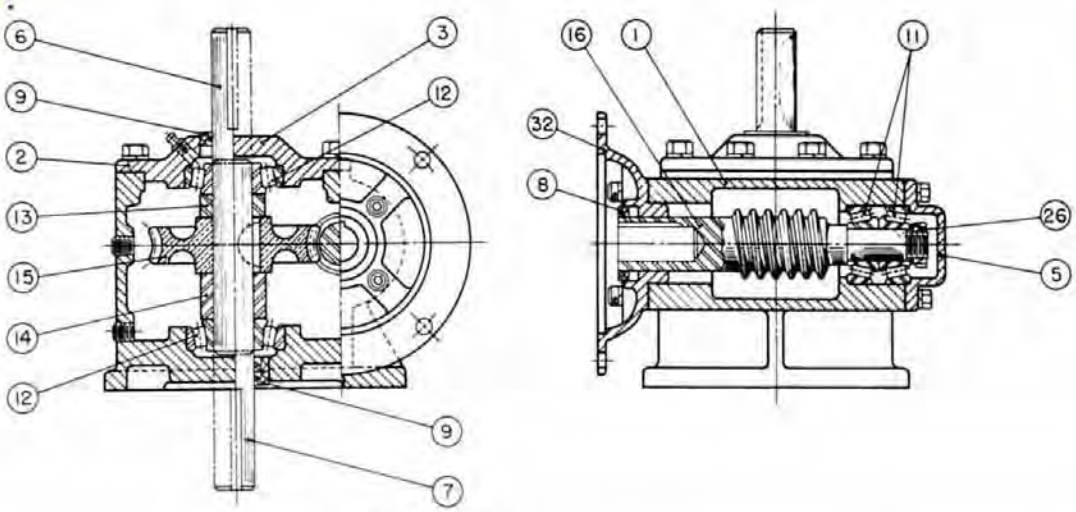

PARTS INDEX

Part No.	Description	Part. No.	Description
1	Housing	12	Roller Bearings Slow Speed
2	Slow Speed Cover — Open	13	Slow Speed Spacer — Short (Not used on #2MCVR)
3	Slow Speed Cover — Closed	14	Slow Speed Spacer — Long
5	High Speed Cover — Closed	15	Slow Speed Worm Gear — Bronze
6	Slow Speed Shaft — Top Extension	16	High Speed Worm and Shaft Integral
7	Slow Speed Shaft — Bottom Extension	26	High Speed Lock Nut
8	Oil Seal High Speed — Motor Adapter End	32	Motor Adapter — 4 1/2" (AK) Register Dia.
9	Oil Seal Slow Speed	32A	Motor Adapter 8 1/2" (AK) Register Dia.
11	Roller Bearings High Speed	32B	Motor Adapter Spacer (Size 4 only)

SHAFT ARRANGEMENTS:

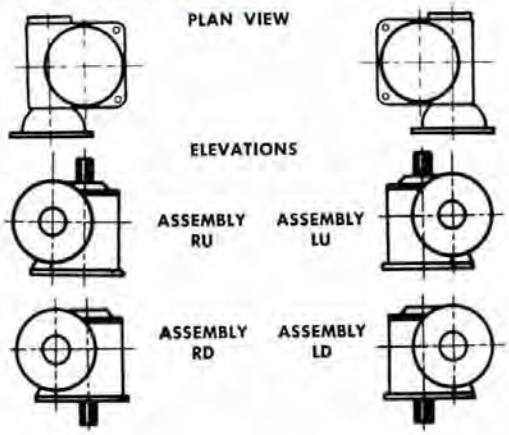

(A) The reducer is viewed looking at the motor end of the high speed shaft.

(B) No extra charge for these assemblies provided the shaft extensions are of standard length. Top and bottom shaft extensions can be supplied at additional charge.

(C) The input shaft may be driven in either direction.

(D) Units may be mounted in any position. (ceiling, sidewall, etc.), if specified when ordered.

WINSMITH

single reduction—fan cooled—motorized and gearmotor

SERIES: MFCT-MFCTW (WITH MOTOR)

GEAR RATIOS AVAILABLE 5:1 THRU 60:1

COMPLETE TORQUE AND HP RATINGS ..... PAGES 122-150
OVERHUNG LOAD RATINGS ..... PAGES 123-223
SERVICE FACTORS ..... PAGE 230
COUPLING ADAPTERS ..... PAGE 120
HYDRAULIC MOTOR ADAPTERS ..... PAGE 116

TABLE OF WEIGHTS

Unit	1	2	3	4	5	6	7	8
Net Weight	17	25	24	41	58	74	102	144

Units #3, 4, 5, 6, 7, and 8 are available with hollow output shafts, see page 62. Alloy steel slow speed shafts available.

Weights are without motor.

FCTMW
See page 120

DIMENSIONS: Dimensions apply to speed reducer only. For motor dimensions see next page.

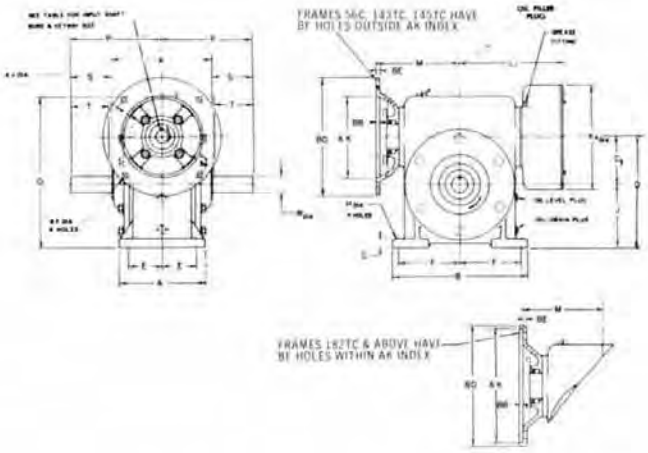

FRAME, KEYWAY and BORE DIMENSIONS

Frame No.	56C	143TC 145TC	182TC 184TC 213TCZ* 215TCZ*
AJ	5 7/8	5 7/8	7 1/4
AK	4 1/2	4 1/2	8 1/2
BB	3/16	3/16	3/16
BD	6 1/2	6 1/2	9
BE	5/16	5/16	3/8
BF	13/32	13/32	17/32
Keyway	3/16 x 3/32	3/16 x 3/32	1/4 x 1/8
Bore +.001 −.000	.6255	.8755	1.1255*

SPEED REDUCER DIMENSIONS (in inches) Refer to D Line for these sizes.

Unit No.	A	B	C_1	D	E	F	G	H	J	K	K_3 Dia.	L_1	M	O	P	Slow Speed Shaft W*	S	T	Keyway	Maximum Frame Size
**1MFCTR	4	5	1.33	3.33	1 5/8	2 1/8	3/8	9/32	2	4	4	4 1/2	3 5/8	4 5/8	4	5/8	2	1 3/4	3/16x3/32	56C
**2MFCTR	4 3/8	5 1/2	1 3/4	4 3/16	1 3/4	2 5/16	1/2	13/32	2 7/16	4 3/4	4 1/2	5	3 7/8	6	4 1/2	3/4	2 1/8	2	3/16x3/32	145TC-184C
3MFCT	4 3/4	6	2	4 5/8	1 7/8	2 1/2	1/2	13/32	2 5/8	4 3/4	4 1/2	5	3 7/8	6 1/4	4 3/4	7/8	2 3/8	2 1/4	3/16x3/32	145TC-184C
4MFCT	4 3/4	7 1/2	2 5/8	6 1/8	1 7/8	3 1/4	1/2	13/32	3 1/2	5 3/8	5 3/4	5 13/16	4 1/2	8 3/4	5 3/8	1	2 11/16	2 1/2	1/4x1/8	145TC-184C
5MFCT	6	8 1/4	3	7	2 3/8	3 1/2	5/8	9/16	4	6	6	6 1/4	5 1/8	9 5/8	5 7/8	1 1/4	2 7/8	2 3/4	1/4x1/8	184TC-215C
6MFCT	6 1/4	9 1/4	3 1/2	8	2 5/8	4 1/8	5/8	9/16	4 1/2	7 1/4	6 1/2	6 11/16	5 1/2	11	7	1 1/2	3 3/8	3 1/4	3/8x3/16	184TC-215C
7MFCT	7	11	4	9	2 7/8	4 7/8	5/8	9/16	5	7 1/4	8	7 9/16	6 3/8	13	7 1/2	1 3/4	3 7/8	3 3/4	3/8x3/16	184TC-215C
8MFCT	8	12 1/2	4 6	10.1	3 1/4	5 1/2	3/4	11/16	5 1/2	9 1/4	9 1/4	8 5/16	7 1/8	14 1/2	8 1/2	1 3/4	3 7/8	3 3/4	3/8x3/16	184TC-215C

*Slow speed shaft diameter tolerance + .000—.001. For construction purposes, send for certified dimension sheets.
**Models 1MFCTR and 2MFCTR; models 3MFCT thru 8MFCT, as shown
**Models 1MFCT and 2MFCT have footless housings. Consult factory.

MOTOR DIMENSIONS:

H.P. @ 1800 RPM	1/6		1/4		1/3		1/2		3/4		1	1 1/2	2	3	5
Phase	Single *	Three	Single *	Three	Single *	Three	Single *	Three	Single *	Three	Three	Three	Three	Three	Three
AG	7 1/2	7 1/2	7 3/4	8 1/4	8 1/4	8 3/4	8 3/4	8 3/4	9 1/4	9 1/4	9 3/4	10 3/4	10 3/4	12 1/4	13 3/4
AP	5 21/32	5 21/32	5 21/32	5 21/32	6 31/64	6 31/64	6 31/64	6 31/64	6 31/64	6 31/64	6 31/64	6 31/64	6 31/64	10 11/32	10 11/32

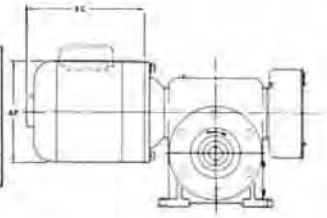

*Single phase motor is capacitor start. Dimensions as shown are for open dripproof enclosure. Motors can be furnished open dripproof or enclosed.

PARTS LIST:

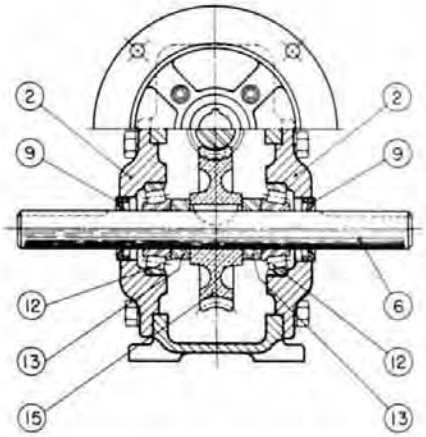

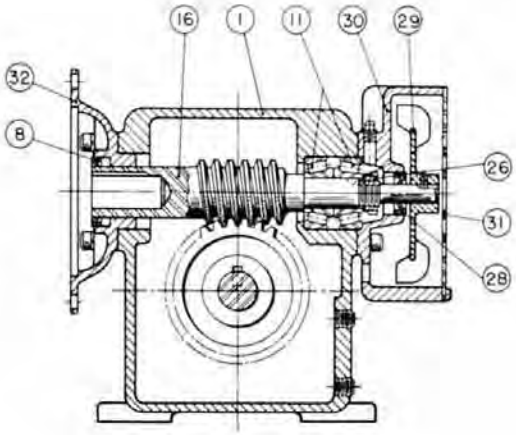

PARTS INDEX

Part No.	Description	Part. No.	Description
1	Housing	15	Slow Speed Worm Gear — Bronze
2	Slow Speed Cover — Open	16	High Speed Worm and Shaft Integral
3	Slow Speed Cover — Closed — Not Shown	26	High Speed Lock Nut
6	Slow Speed Shaft — Double Extension	28	Oil Seal — High Speed — Fan End
7	Slow Speed Shaft — Single Extension — Not Shown	29	Fan
8	Oil Seal — High Speed — Motor Adapter End	30	Fan Housing and Cap
9	Oil Seal — Slow Speed	31	Fan Housing Cover
11	Roller Bearings — High Speed	32	Motor Adapter—4½" (AK) Register Dia
12	Roller Bearings — Slow Speed	32A	Motor Adapter 8½" (AK) Register Dia
13	Slow Speed Spacer (Not used on #2MFCTR)	32B	Motor Adapter Spacer (Size 4 only)

SHAFT ARRANGEMENTS:

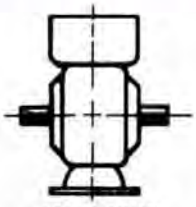

ASSEMBLY LR
OPTIONAL

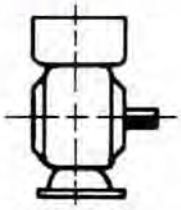

ASSEMBLY R
STANDARD

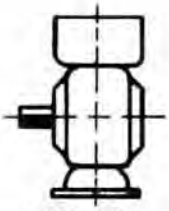

ASSEMBLY L
STANDARD

(A) When facing the input shaft, slow speed shaft is to left (L), or right (R) or both (LR).

(B) No extra charge for the standard assemblies provided the shaft extensions are of standard length.

(C) The input shaft may be driven in either direction.

(D) Units may be mounted in any position, (ceiling, sidewall, etc.), if specified when ordered.

WINSMITH

single reduction — fan-cooled — motorized and gearmotor

SERIES: MFCV-MFCVW (WITH MOTOR)

GEAR RATIOS AVAILABLE 5:1 THRU 60:1

COMPLETE TORQUE AND HP RATINGS ..... PAGES 122-150
OVERHUNG LOAD RATINGS ..... PAGES 123-223
SERVICE FACTORS ..... PAGE 230
COUPLING ADAPTERS ..... PAGE 120
HYDRAULIC MOTOR ADAPTERS ..... PAGE 116

TABLE OF WEIGHTS

Unit	1	2	3	4	5	6	7	8
Net Weight	17	25	24	41	55	75	104	136

Alloy steel slow speed shafts available. Weights are without motor.
Hydraulic Motor Flanges available, see pages 116-118.
Units 1 through 15 available in "C" flange coupling type, see page 120.

FCVMW
See page 120.

DIMENSIONS: Dimensions apply to speed reducer only. For motor dimensions see next page.

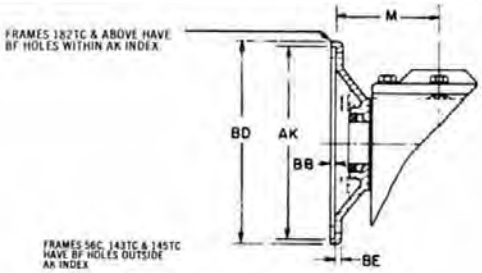

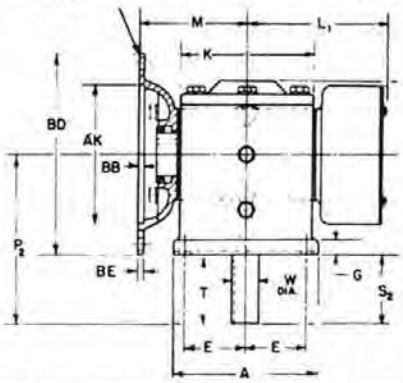

FRAME, KEYWAY and BORE DIMENSIONS

Frame No.	56C	143TC 145TC	182TC 184TC 213TCZ* 215TCZ*
AJ	5⅞	5⅞	7¼
AK	4½	4½	8½
BB	3/16	3/16	3/16
BD	6½	6½	9
BE	5/16	5/16	⅜
BF	13/32	13/32	17/32
Keyway	3/16 x 3/32	3/16 x 3/32	¼ x ⅛
Bore +.001 −.000	.6255	.8755	1.1255*

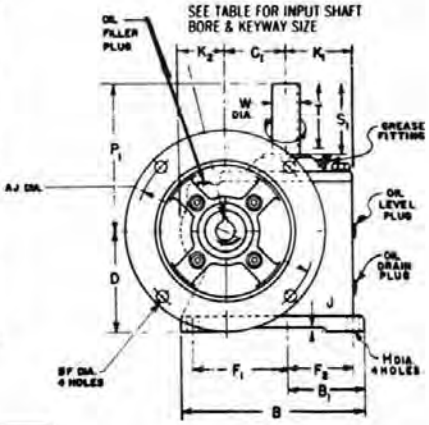

SPEED REDUCER DIMENSIONS (in inches)

Refer to D Line for these sizes.

Unit No.	A	B	B_1	C_1	D	E	F_1	F_2	G	H	J	K	K_1	K_2	K_3 Dia.	L_1	M	O	P_1	P_2	Slow Speed Shaft W*	S_1	S_2	T	Keyway
**1MFCVR	4¼	4¾	2	1.33	2¼	1¾	2⅜	1⅝	⅜	9/32	⅛	3⅜	1 11/16	1 5/16	4	4½	3⅝	4⅜	4	4	⅝	1⅞	1¾	1¾	3/16x3/32
**2MFCVR	4¾	5¾	2½	1¾	2 13/16	2	2⅞	2⅛	½	13/32	⅛	4 5/16	2 3/16	1½	4½	5	3⅝	5 3/16	4½	4 13/16	¾	2⅛	2	2	3/16x3/32
3MFCV	4¾	6	2½	2	3¼	2	3⅛	2⅛	½	13/32	⅛	4 5/16	2 3/16	1½	4½	5	3⅝	5⅝	4¾	5½	⅞	2⅜	2¼	2¼	3/16x3/32
4MFCV	6¾	7½	3¼	2⅝	3⅝	2⅞	3⅞	2⅞	½	13/32	3/16	5⅞	2 15/16	1⅝	5¾	5 13/16	4½	6 9/16	5⅜	6⅛	1	2 11/16	2½	2½	¼x⅛
5FMCV	7¼	8¾	3¾	3	3¾	3⅛	4½	3¼	⅝	3/16	⅛	6¾	3⅜	2	6	6¼	5⅛	6¾	5⅞	6½	1⅛	2⅞	2¾	2⅝	¼x⅛
6MFCV	8	10	4¼	3½	4	3½	5¼	3¾	⅝	9/16	3/16	7½	3¾	2 3/16	6½	6 11/16	5½	7⅝	7	7¼	1½	3⅜	3¼	3¼	3/8x3/16
7MFCV	9½	10⅞	4¾	4	4½	4⅛	5½	4⅛	⅝	9/16	0	8 9/16	4 5/16	2 3/16	6½	7 9/16	6⅜	8⅛	7½	8¼	1¾	3⅞	3¾	3¾	3/8x3/16
8MFCV	11½	12½	5¾	4.6	5	5	6	5	¾	11/16	3/16	10¼	5⅛	2 3/16	6½	8 5/16	7⅛	9⅝	8½	8¾	1¾	3⅞	3¾	3¾	3/8x3/16

*Slow speed shaft diameter tolerance + .000—.001. For construction purposes, send for certified dimension sheets.
**Models 1MFCVR and 2MFCVR; models 3MFCV thru 8MFCV, as shown.
**Models 1MFCV and 2MFCV have footless housings. Consult factory.

single reduction
fan-cooled — motorized and gearmotor

MOTOR DIMENSIONS:

H.P. @ 1800 RPM	1/6		1/4		1/3		1/2		3/4		1	1 1/2	2	3	5
Phase	Single *	Three	Single *	Three	Single *	Three	Single *	Three	Single *	Three	Three	Three	Three	Three	Three
AG	7 1/2	7 1/2	7 3/4	8 1/4	8 1/4	8 3/4	8 3/4	8 3/4	9 1/4	9 1/4	9 3/4	10 3/4	10 3/4	12 1/4	13 3/4
AP	5 21/32	5 21/32	5 21/32	5 21/32	6 31/64	6 31/64	6 31/64	6 31/64	6 31/64	6 31/64	6 31/64	6 31/64	6 31/64	10 11/32	10 11/32

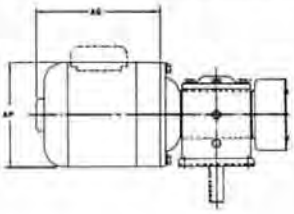

*Single phase motor is capacitor start Dimensions as shown are for open dripproof enclosure. Motors can be furnished open dripproof or enclosed

PARTS LIST:

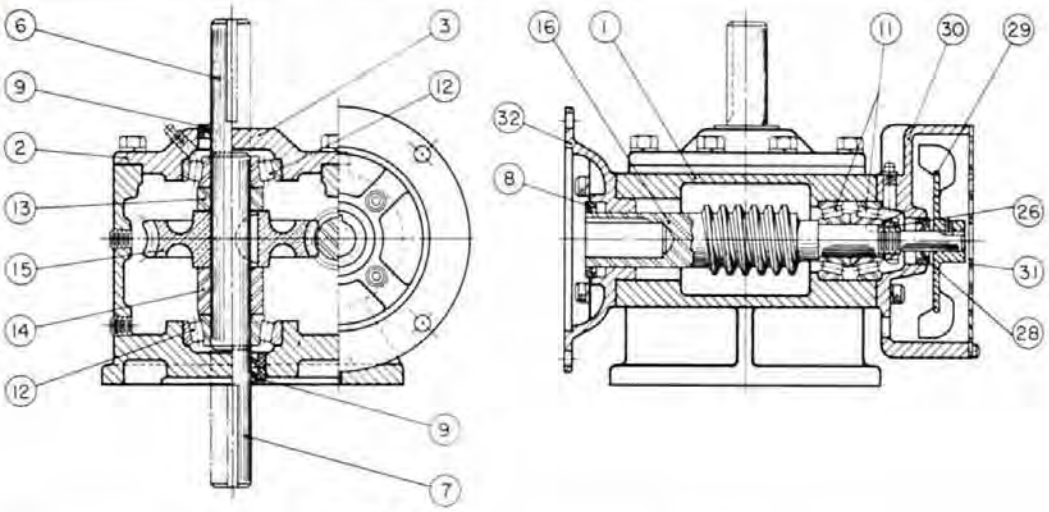

PARTS INDEX

Part No.	Description	Part. No.	Description
1	Housing	14	Slow Speed Spacer — Long
2	Slow Speed Cover — Open	15	Slow Speed Worm Gear — Bronze
3	Slow Speed Cover — Closed	16	High Speed Worm and Shaft Integral
6	Slow Speed Shaft — Top Extension	26	High Speed Lock Nut
7	Slow Speed Shaft — Bottom Extension	28	Oil Seal — High Speed — Fan End
8	Oil Seal — High Speed — Motor Adapter End	29	Fan
9	Oil Seal — Slow Speed	30	Fan Housing and Cap
11	Roller Bearings — High Speed	31	Fan Housing Cover
12	Roller Bearings — Slow Speed	32	Motor Adapter — 4½" (AK) Register Dia.
13	Slow Speed Spacer — Short (Not used on #2MFCVR)	32A	Motor Adapter 8½" (AK) Register Dia
		32B	Motor Adapter Spacer (Size 4 only)

SHAFT ARRANGEMENTS:

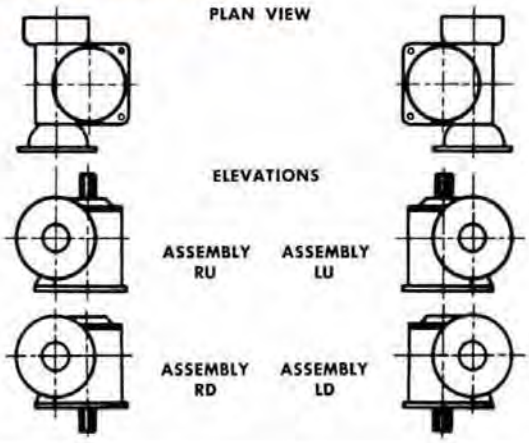

(A) The reducer is viewed looking at the motor end of the high speed shaft.

(B) No extra charge for these assemblies provided the shaft extensions are of standard length. Top and bottom shaft extensions can be supplied at additional charge.

(C) The input shaft may be driven in either direction.

(D) Units may be mounted in any position, (ceiling, sidewall, etc.), if specified when ordered.

WINSMITH

single reduction—hollow shaft

SERIES: SF

GEAR RATIOS AVAILABLE 5:1 THRU 60:1
COMPLETE TORQUE AND HP RATINGS ..... PAGES 122-150
OVERHUNG LOAD RATINGS ..... PAGES 123-223
SERVICE FACTORS ..... PAGE 230
COUPLING ADAPTERS ..... PAGE 120
HYDRAULIC MOTOR ADAPTERS ..... PAGE 116

TABLE OF WEIGHTS

Unit	3	4	5	6	7	8	9	10	12
Net Weight	20	34	57	65	124	140	225	240	375

Also available with foot mounted housing #CB - CT type, consult factory.

DIMENSIONS:

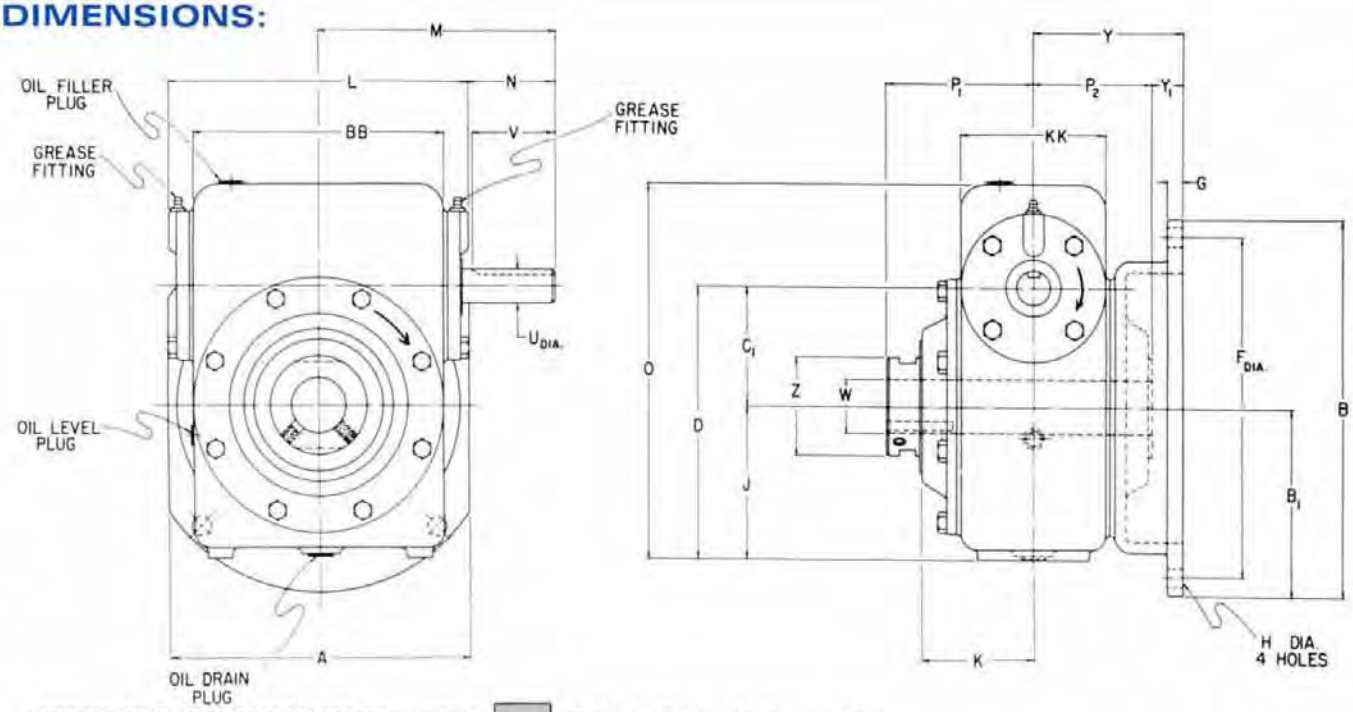

SPEED REDUCER DIMENSIONS (in inches) Refer to D Line for these sizes.

Unit	A	B	B_1	BB	C_1	D	F dia	G	H	J	K	KK	L	M	O	P_1	P_2	Y	Y_1	Z	High Speed Shaft U*	N	V	Keyway
3 SF	5¾	7⅜	3 11/16	4 5/16	2	4⅝	6½	⅜	13/32	2⅝	2⅝	3	5¾	4¾	6¼	3⅜	2⅞	3⅜	½	1¾	⅝	1⅞	1¾	3/16×3/32
4 SF	7¾	8⅞	4 7/16	6⅛	2⅝	6⅛	8	⅜	13/32	3½	2 13/16	3¼	7⅞	6	8⅜	3 11/16	3	3⅝	⅜	2¼	¾	2 1/16	2	3/16×3/32
5 SF	8	10½	5¼	6¾	3	7	9¼	½	9/16	4	3	4	8⅜	6½	9⅝	4 1/16	3 3/16	5	1 13/16	2 11/16	⅞	2 5/16	2¼	3/16×3/32
6 SF	9	11	5½	7½	3½	8	10	½	9/16	4½	3⅜	4⅜	9¼	7 1/16	11	4 7/16	3 9/16	4½	15/16	2⅞	1	2 7/16	2½	¼×⅛
7 SF	10½	13	6½	9 3/16	4	9	11½	⅝	11/16	5	3⅝	5	11	8	13	4 11/16	3 13/16	5¾	1 15/16	3⅝	1	2½	2½	¼×⅛
8 SF	12¼	14¼	7⅛	10⅝	4.6	10.1	13	⅝	11/16	5½	4⅝	6⅛	12½	9	14½	5 11/16	4 13/16	5¾	15/16	4¼	1⅛	2¾	2¾	¼×⅛
9 SF	12½	15½	7¾	11 11/16	5.167	11.167	14	¾	13/16	6	4⅝	5½	13½	9½	14¾	5 13/16	4 15/16	7	2 1/16	5⅜	1⅛	2¾	2¾	¼×⅛
10 SF	14¼	17¾	8⅞	12⅞	6	13	16	¾	13/16	7	5⅛	6 5/16	15⅝	10¼	18½	6 5/16	5 7/16	8	2 9/16	5⅜	1¼	2 11/16	2¾	¼×⅛
12 SF	16½	21¼	10⅝	15¾	7	15½	19	1	1 1/16	8½	6⅛	7½	18½	12⅜	21½	7 5/16	6 7/16	8	1 9/16	6½	1½	3⅜	3⅜	⅜×3/16

*Shaft diameter tolerances + .000 – .001. For construction purposes send for Certified Dimension Sheets.

PARTS LIST:

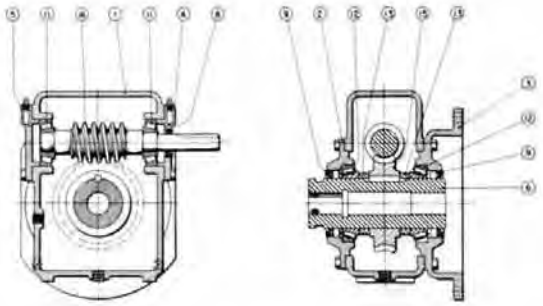

PARTS INDEX

Part No.	Description
1	Housing
2	Slow Speed Cover
3	Slow Speed Cover and Base
4	High Speed Cover—Open
5	High Speed Cover—Closed
5A	High Speed Adapter—Not Shown—Used with H.S. Cover Closed Units 10 and 12
6	Slow Speed Shaft—Hollow
8	Oil Seal—High Speed
9	Oil Seal—Slow Speed
*11	Roller Bearings—High Speed
12	Roller Bearings—Slow Speed
13	Slow Speed Spacer (Not Used on 3SFor 7SF
15	Slow Speed Worm Gear—Bronze
16	High Speed Worm and Shaft Integral
26	High Speed Locknut—Not Shown—Used on Units 10 and 12

*Series 3 thru 9 uses 2 Single Row Bearings. Series 10 and 12 uses 1 Single and 1 Double Row Bearing.

2

DIMENSIONS: SLOW SPEED SHAFT BORES (in inches)

3 SF			4 SF			5 SF			6 SF			7 SF			8 SF		
W‡	Keyway	Length	W‡	Keyway	Length	W‡	Keyway	Length	W‡	Keyway	Length	W‡	Keyway	Length	W‡	Keyway	Length
3/4	3/16x3/32	6 1/4	15/16	1/4x1/8	6 11/16	1 3/16	1/4x1/8	7 1/4	1 3/16	1/4x1/8	8	1 5/8	3/8x3/16	8 1/2	1 11/16	3/8x3/16	10 1/2
13/16	3/16x3/32	6 1/4	**1**	1/4x1/8	6 11/16	1 1/4	1/4x1/8	7 1/4	**1 1/4**	1/4x1/8	8	1 11/16	3/8x3/16	8 1/2	**1 3/4**	3/8x3/16	10 1/2
7/8	3/16x3/32	6 1/4	1 1/16	1/4x1/8	6 11/16	1 3/8	5/16x5/32	7 1/4	**1 3/8**	5/16x5/32	8	1 3/4	3/8x3/16	8 1/2	1 7/8	1/2x1/4	10 1/2
15/16	1/4x1/8	6 1/4	1 1/8	1/4x1/8	6 11/16	1 7/16	3/8x3/16	7 1/4	**1 7/16**	3/8x3/16	8	1 7/8	1/2x1/4	8 1/2	**1 15/16**	1/2x1/4	10 1/2
1	1/4x1/8	6 1/4	1 3/16	1/4x1/8	6 11/16	**1 1/2**	3/8x3/16	7 1/4	**1 1/2**	3/8x3/16	8	1 15/16	1/2x1/4	8 1/2	**2**	1/2x1/4	10 1/2
1 1/16	1/4x1/8	6 1/4	**1 1/4**	1/4x1/8	6 11/16	**1 5/8**	3/8x3/16	7 1/4	1 5/8	3/8x3/16	8	2	1/2x1/4	8 1/2	**2 3/16**	1/2x1/4	10 1/2
1 1/8	1/4x1/8	6 1/4	1 3/8	5/16x5/32	6 11/16	1 11/16	3/8x3/16	7 1/4	1 11/16	3/8x3/16	8	**2 3/16**	1/2x1/4	8 1/2	2 1/4	1/2x1/4	10 1/2
1 3/16	1/4x1/8	6 1/4	1 7/16	3/8x3/16	6 11/16	**1 3/4**	3/8x3/16	7 1/4	**1 3/4**	3/8x3/16	8	2 1/4	1/2x1/4	8 1/2	**2 7/16**	5/8x5/16	10 1/2
1 1/4	1/4x1/8	6 1/4	**1 1/2**	3/8x3/16	6 11/16	**1 7/8**	1/2x3/16	7 1/4	1 7/8	1/2x1/4	8	**2 7/16**	5/8x7/32	8 1/2	**2 1/2**	5/8x5/16	10 1/2
			1 5/8	3/8x1/8	6 11/16				**1 15/16**	1/2x1/4	8				2 11/16	5/8x5/16	10 1/2
			1 11/16	3/8x1/8	6 11/16				**2**	1/2x1/4	8				2 3/4	5/8x5/16	10 1/2
									2 3/16	1/2x1/8	8				**2 15/16**	3/4x1/4	10 1/2
															3	3/4x1/4	10 1/2

9 SF			10 SF			12 SF		
W‡	Keyway	Length	W‡	Keyway	Length	W‡	Keyway	Length
2 3/16	1/2x1/4	10 3/4	**2 3/16**	1/2x1/4	11 3/4	2 11/16	5/8x5/16	13 3/4
2 1/4	1/2x1/4	10 3/4	2 1/4	1/2x1/4	11 3/4	2 3/4	5/8x5/16	13 3/4
2 7/16	5/8x5/16	10 3/4	**2 7/16**	5/8x5/16	11 3/4	2 15/16	3/4x3/8	13 3/4
2 1/2	5/8x5/16	10 3/4	2 1/2	5/8x5/16	11 3/4	**3**	3/4x3/8	13 3/4
2 11/16	5/8x5/16	10 3/4	**2 11/16**	5/8x5/16	11 3/4	3 3/16	3/4x3/8	13 3/4
2 3/4	5/8x5/16	10 3/4	**2 3/4**	5/8x5/16	11 3/4	**3 7/16**	7/8x7/16	13 3/4
2 15/16	3/4x3/8	10 3/4	**2 15/16**	3/4x3/8	11 3/4	3 15/16	1x1/2	13 3/4
3	3/4x3/8	10 3/4	**3**	3/4x3/8	11 3/4	4 3/16	1x1/2	13 3/4
3 3/16	3/4x3/8	10 3/4	3 3/16	3/4x3/8	11 3/4	4 7/16	1x1/2	13 3/4
3 7/16	7/8x7/16	10 3/4	**3 7/16**	7/8x7/16	11 3/4			

‡ Bore Tolerances + .000, + .002.

For improved availability, specify bore sizes shown in bold type (super standards) whenever possible. Some bore sizes may require a premium. See price list for details.

SHAFT ARRANGEMENTS:
(STANDARD MOUNTING POSITIONS EXACTLY AS SHOWN)*

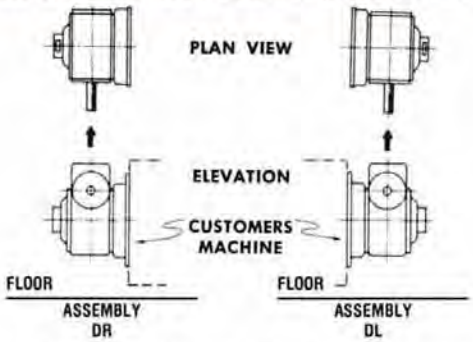

(A) Reducer viewed looking at input shaft.
(B) No extra charge for the above assemblies provided shaft extensions are standard.
(C) The input shaft may be driven in either direction.
*NOTE: Standard mounting position is exactly as shown. If motor is to be oriented in any other position, so state on order.

WINSMITH

single reduction — hollow shaft

SERIES: ST

GEAR RATIOS AVAILABLE 5:1 THRU 60:1

COMPLETE TORQUE AND HP RATINGS ..... PAGES 122-150
OVERHUNG LOAD RATINGS ..... PAGES 123-223
SERVICE FACTORS ..... PAGE 230
COUPLING ADAPTERS ..... PAGE 120
HYDRAULIC MOTOR ADAPTERS ..... PAGE 116

TABLE OF WEIGHTS

Unit	3	4	5	6	7	8	9	10	12
Net Weight	20	34	57	65	124	140	225	240	375

Also available with foot mounted housing #CB - CT type. consult factory.

DIMENSIONS:

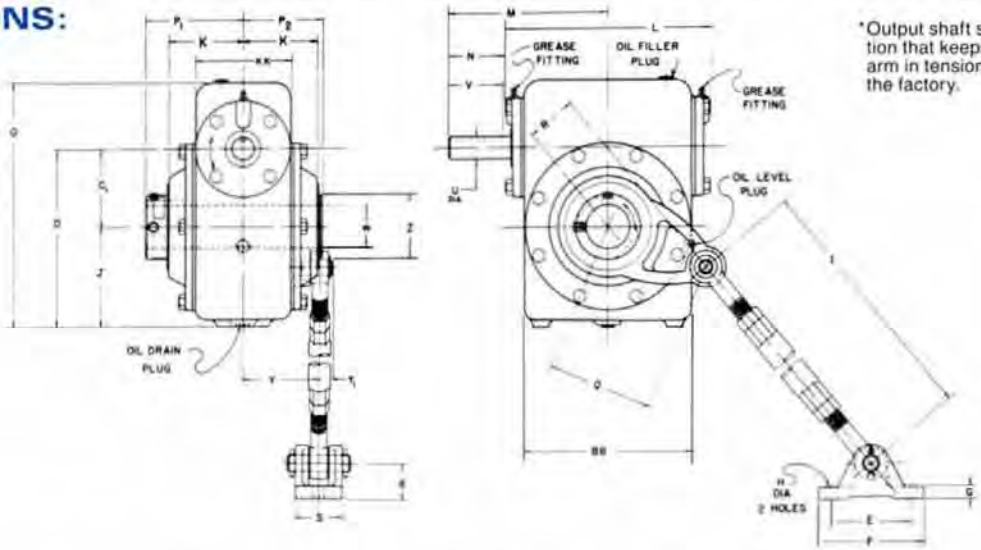

*Output shaft should rotate in a direction that keeps the torque reaction arm in tension. If otherwise, contact the factory.

SPEED REDUCER DIMENSIONS (in inches) Refer to D Line for these sizes.

Unit	BB	C_1	D	E	F	G	H	I max	I min	J	K	KK	L	M	O	P_1	P_2	Q	Rmin	S	X	Y	Y_1	Z	High Speed Shaft U*	N	V	Keyway
3 ST	4 5/16	2	4 5/8	2 7/8	3 3/4	3/8	11/32	20	14	2 5/8	2 5/8	3	5 3/4	4 3/4	6 1/4	3 3/8	2 7/8	3	2 1/2	1 1/4	1 1/8	2 3/8	3/8	1 3/4	5/8	1 7/8	1 3/4	3/16x3/32
4 ST	6 1/8	2 5/8	6 1/8	3	4	3/8	13/32	23 1/2	18	3 1/2	2 13/16	3 1/4	7 7/8	6	8 3/8	3 11/16	3	3 3/4	3	1 3/4	1 3/8	2 11/16	1/2	2 1/4	3/4	2 5/16	2	3/16x3/32
5 ST	6 3/4	3	7	3	4	3/8	13/32	23 1/2	18	4	3	4	8 3/8	6 1/2	9 5/8	4 5/16	3 3/16	4 1/4	3 1/2	1 3/4	1 3/8	3 1/16	1/2	2 11/16	7/8	2 5/16	2 1/4	3/16x3/32
6 ST	7 1/2	3 1/2	8	3 1/2	4 3/4	9/16	17/32	29	21	4 1/2	3 3/8	4 3/8	9 1/4	7 1/16	11	4 7/16	3 9/16	4 3/4	4	2 1/8	1 5/8	3 1/2	5/8	2 7/8	1	2 7/16	2 1/2	1/4x1/8
7 ST	9 3/16	4	9	3 1/2	4 3/4	9/16	17/32	29	21	5	3 5/8	5	11	8	13	4 11/16	3 13/16	5 1/2	4 1/2	2 1/8	1 5/8	3 5/8	5/8	3 5/8	1	2 1/2	2 1/2	1/4x1/8
8 ST	10 5/8	4.6	10.1	3 1/2	4 3/4	9/16	17/32	29	21	5 1/2	4 5/8	6 1/8	12 1/2	9	14 1/2	5 11/16	4 13/16	6 1/8	5	2 1/8	1 5/8	4 7/16	5/8	4 1/4	1 1/8	2 3/4	2 3/4	1/4x1/8
9 ST	11 11/16	5.167	11.167	5	6 3/4	3/4	13/16	31	22	6	4 5/8	5 1/2	13 1/2	9 1/2	14 3/4	5 13/16	4 15/16	6 3/4	5 1/2	2 1/16	1 15/16	4 3/16	11/16	5 3/8	1 1/8	2 3/4	2 3/4	1/4x1/8
10 ST	12 7/8	6	13	5	6 3/4	3/4	13/16	31	22	7	5 1/8	6 5/16	15 5/8	10 1/4	18 1/2	6 5/16	5 7/16	8	6	2 1/16	1 15/16	4 1/2	1 11/32	5 3/8	1 1/4	2 11/16	2 3/4	1/4x1/8
12 ST	15 3/4	7	15 1/2	5 3/4	7 3/4	7/8	15/16	37 1/2	26 1/2	8 1/2	6 1/8	7 1/2	18 1/2	12 3/8	21 1/2	7 5/16	6 7/16	9 13/16	7	2 11/16	2 3/8	5 13/32	1 21/32	6 1/2	1 1/2	3 3/8	3 3/8	3/8x3/16

*Shaft diameter tolerances + .000 – .001. For construction purposes send for Certified Dimension Sheets.

PARTS LIST:

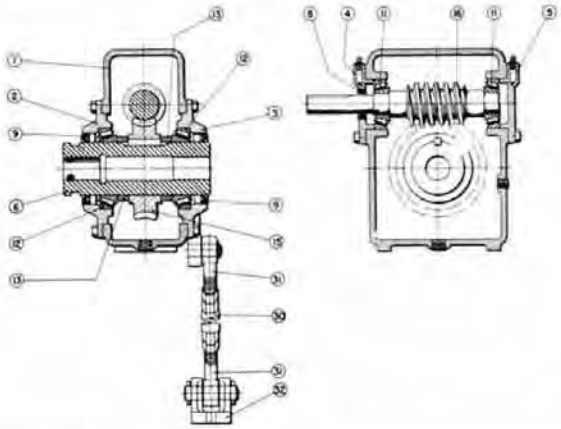

PARTS INDEX

Part No.	Description
1	Housing
2	Slow Speed Cover
3	Slow Speed Cover with Torque Arm Lug
4	High Speed Cover—Open
5	High Speed Cover—Closed
5A	High Speed Adapter—Not Shown—Used with H.S. Cover Closed unit 10 and 12
6	Slow Speed Shaft—Hollow
8	Oil Seal—High Speed
9	Oil Seal—Slow Speed
*11	Roller Bearing—High Speed
12	Roller Bearing—Slow Speed
13	Slow Speed Spacer (Not Used on Size 3 or 7 only)
15	Slow Speed Worm Gear—Bronze
16	High Speed Worm and Shaft Integral
26	High Speed Locknut—Not Shown—Used on Units 10 and 12
30	Torque Arm Turnbuckle
31	Torque Arm Rod End—Right Hand & Left Hand
32	Floor Support

*Series 3 thru 9 uses 2 Single Row Bearings. Series 10 and 12 uses 1 Single and 1 Double Row Bearing

2

DIMENSIONS: SLOW SPEED SHAFT BORES (in inches)

3 SF			4 SF			5 SF			6 SF			7 SF			8 SF		
W‡	Keyway	Length	W‡	Keyway	Length	W‡	Keyway	Length	W‡	Keyway	Length	W‡	Keyway	Length	W‡	Keyway	Length
3/4	3/16x3/32	6 1/4	15/16	1/4x1/8	6 11/16	1 3/16	1/4x1/8	7 1/4	1 3/16	1/4x1/8	8	1 5/8	3/8x3/16	8 1/2	1 11/16	3/8x3/16	10 1/2
1 3/16	3/16x3/32	6 1/4	**1**	1/4x1/8	6 11/16	1 1/4	1/4x1/8	7 1/4	**1 1/4**	1/4x1/8	8	1 11/16	3/8x3/16	8 1/2	**1 3/4**	3/8x3/16	10 1/2
7/8	3/16x3/32	6 1/4	1 1/16	1/4x1/8	6 11/16	1 3/8	5/16x5/32	7 1/4	**1 3/8**	5/16x5/32	8	1 3/4	3/8x3/16	8 1/2	1 7/8	1/2x1/4	10 1/2
15/16	1/4x1/8	6 1/4	1 1/8	1/4x1/8	6 11/16	1 7/16	3/8x3/16	7 1/4	**1 7/16**	3/8x3/16	8	1 7/8	1/2x1/4	8 1/2	**1 15/16**	1/2x1/4	10 1/2
1	1/4x1/8	6 1/4	1 3/16	1/4x1/8	6 11/16	**1 1/2**	3/8x3/16	7 1/4	**1 1/2**	3/8x3/16	8	1 15/16	1/2x1/4	8 1/2	**2**	1/2x1/4	10 1/2
1 1/16	1/4x1/8	6 1/4	**1 1/4**	1/4x1/8	6 11/16	**1 5/8**	3/8x3/16	7 1/4	1 5/8	3/8x3/16	8	2	1/2x1/4	8 1/2	**2 3/16**	1/2x1/4	10 1/2
1 1/8	1/4x1/8	6 1/4	1 3/8	5/16x5/32	6 11/16	1 11/16	3/8x3/16	7 1/4	1 11/16	3/8x3/16	8	**2 3/16**	1/2x1/4	8 1/2	2 1/4	1/2x1/4	10 1/2
1 3/16	1/4x1/8	6 1/4	1 7/16	3/8x3/16	6 11/16	**1 3/4**	3/8x3/16	7 1/4	**1 3/4**	3/8x3/16	8	2 1/4	1/2x1/4	8 1/2	**2 7/16**	5/8x5/16	10 1/2
1 1/4	1/4x1/8	6 1/4	**1 1/2**	3/8x3/16	6 11/16	**1 7/8**	1/2x3/16	7 1/4	1 7/8	1/2x1/4	8	**2 7/16**	5/8x7/32	8 1/2	**2 1/2**	5/8x5/16	10 1/2
			1 5/8	3/8x1/8	6 11/16				**1 15/16**	1/2x1/4	8				2 11/16	5/8x5/16	10 1/2
			1 11/16	3/8x1/8	6 11/16				**2**	1/2x1/4	8				2 3/4	5/8x5/16	10 1/2
									2 3/16	1/2x1/8	8				**2 15/16**	3/4x1/4	10 1/2
															3	3/4x1/4	10 1/2

9 SF			10 SF			12 SF		
W‡	Keyway	Length	W‡	Keyway	Length	W‡	Keyway	Length
2 3/16	1/2x1/4	10 3/4	**2 3/16**	1/2x1/4	11 3/4	2 11/16	5/8x5/16	13 3/4
2 1/4	1/2x1/4	10 3/4	2 1/4	1/2x1/4	11 3/4	2 3/4	5/8x5/16	13 3/4
2 7/16	5/8x5/16	10 3/4	**2 7/16**	5/8x5/16	11 3/4	2 15/16	3/4x3/8	13 3/4
2 1/2	5/8x5/16	10 3/4	2 1/2	5/8x5/16	11 3/4	**3**	3/4x3/8	13 3/4
2 11/16	5/8x5/16	10 3/4	**2 11/16**	5/8x5/16	11 3/4	3 3/16	3/4x3/8	13 3/4
2 3/4	5/8x5/16	10 3/4	**2 3/4**	5/8x5/16	11 3/4	**3 7/16**	7/8x7/16	13 3/4
2 15/16	3/4x3/8	10 3/4	**2 15/16**	3/4x3/8	11 3/4	3 15/16	1x1/2	13 3/4
3	3/4x3/8	10 3/4	**3**	3/4x3/8	11 3/4	4 3/16	1x1/2	13 3/4
3 3/16	3/4x3/8	10 3/4	3 3/16	3/4x3/8	11 3/4	4 7/16	1x1/2	13 3/4
3 7/16	7/8x7/16	10 3/4	**3 7/16**	7/8x7/16	11 3/4			

‡ Bore Tolerances + .000, + .002.

For improved availability, specify bore sizes shown in bold type (super standards) whenever possible. Some bore sizes may require a premium. See price list for details.

SHAFT ARRANGEMENTS:
(STANDARD MOUNTING POSITIONS EXACTLY AS SHOWN)*

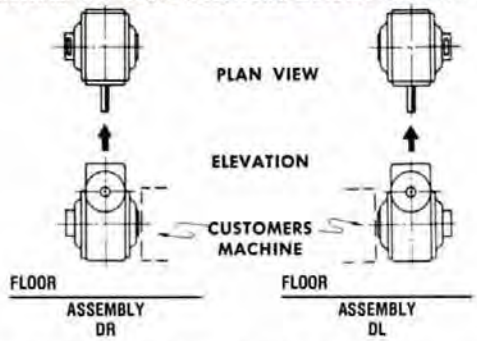

(A) Reducer viewed looking at input shaft.
(B) No extra charge for the above assemblies provided shaft extensions are standard.
(C) The input shaft may be driven in either direction.
*NOTE: Standard mounting position is exactly as shown. If motor is to be oriented in any other position, so state on order.

WINSMITH

single reduction—hollow shaft—fan cooled

SERIES: FSF

GEAR RATIOS AVAILABLE 5:1 THRU 60:1
COMPLETE TORQUE AND HP RATINGS ..... PAGES 122-150
OVERHUNG LOAD RATINGS ..... PAGES 123-223
SERVICE FACTORS ..... PAGE 230
COUPLING ADAPTERS ..... PAGE 120
HYDRAULIC MOTOR ADAPTERS ..... PAGE 116

Unit	3	4	5	6	7	8	9	10	12
Net Weight	23	39	62	71	130	149	235	255	395

DIMENSIONS:

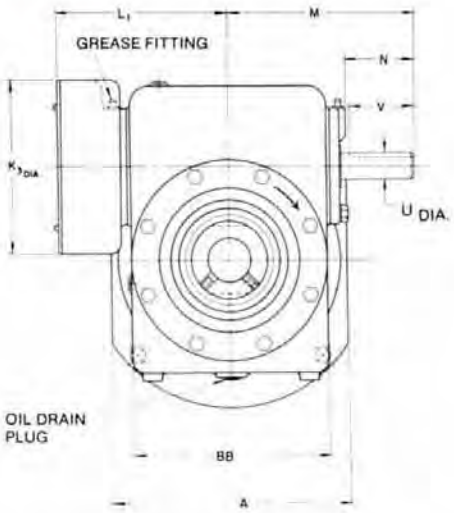

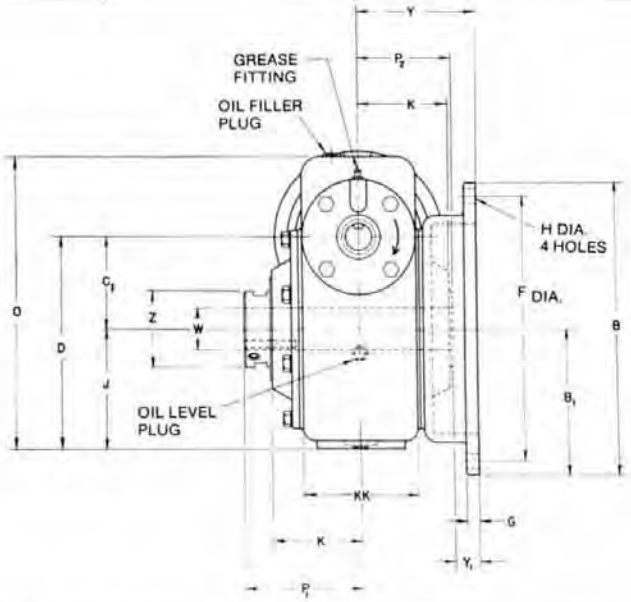

SPEED REDUCER DIMENSIONS (in inches) Refer to D Line for these sizes.

Unit	A	B	B_1	BB	C_1	D	F dia	G	H	J	K	KK	K_3 dia.	L_1	M	O	P_1	P_2	Y	Y_1	Z	High Speed Shaft U*	N	V	Keyway
3 FSF	5¾	7⅜	3 11/16	4 5/16	2	4⅝	6½	⅜	13/32	2⅜	2⅝	3	4½	4⅝	4¾	6¼	3⅜	2⅞	3⅜	½	1¾	⅝	1⅞	1¾	3/16x3/32
4 FSF	7¾	8⅞	4 7/16	6⅛	2⅝	6⅛	8	⅜	13/32	3½	2 13/16	3¼	5¾	5 13/16	6	8⅜	3 11/16	3	3⅝	⅝	2¼	¾	2 1/16	2	3/16x3/32
5 FSF	8	10½	5¼	6¾	3	7	9¼	½	9/16	4	3	4	6	6¼	6½	9⅝	4 1/16	3 3/16	5	1 13/16	2 11/16	⅞	2 5/16	2¼	3/16x3/32
6 FSF	9	11	5½	7½	3½	8	10	½	9/16	4½	3⅜	4⅜	6½	6 11/16	7 1/16	11	4 7/16	3 9/16	4½	15/16	2⅞	1	2 7/16	2½	¼x⅛
7 FSF	10½	13	6½	9 3/16	4	9	11½	⅝	11/16	5	3⅝	5	8	7 9/16	8	13	4 11/16	3 13/16	5¾	1 15/16	3⅝	1	2½	2½	¼x⅛
8 FSF	12¼	14¼	7⅛	10⅝	4.6	10.1	13	⅝	11/16	5½	4⅝	6⅛	9¼	8 5/16	9	14½	5 11/16	4 13/16	5¾	15/16	4¼	1⅛	2¾	2¾	¼x⅛
9 FSF	12½	15½	7¾	11 11/16	5.167	11.167	14	¾	11/16	6	4⅝	5½	9¼	8 13/16	9½	14¾	5 13/16	4 15/16	7	2 1/16	5⅜	1⅛	2¾	2¾	¼x⅛
10 FSF	14¼	17¾	8⅞	12⅞	6	13	16	¾	13/16	7	5⅛	6 5/16	10¼	10½	10¼	18½	6 5/16	5 7/16	8	2 9/16	5⅜	1¼	2 11/16	2¾	¼x⅛
12 FSF	16½	21¼	10⅝	15¾	7	15½	19	1	1 1/16	8½	6⅛	7½	12¼	12 7/16	12⅜	21½	7 5/16	6 7/16	8	1 9/16	6½	1½	3⅜	3⅜	⅜x3/16

*Shaft diameter tolerances +.000, —.001. For construction purposes send for Certified Dimension Sheets.

PARTS LIST:

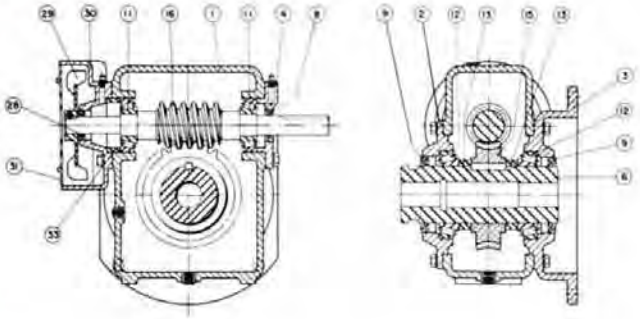

PARTS INDEX

Part No.	Description
1	Housing
2	Slow Speed Cover
3	Slow Speed Cover and Base
4	High Speed Cover—Open
5A	High Speed Adapter—Not Shown—Used with Fan HSG and CAP Units 10 and 12
6	Slow Speed Shaft—Hollow
8	Oil Seal—High Speed
9	Oil Seal—Slow Speed
*11	Roller Bearings—High Speed
12	Roller Bearings—Slow Speed
13	Slow Speed Spacer (Not Used on Size 3 or 7 only)
15	Slow Speed Worm Gear—Bronze
16	High Speed Worm and Shaft Integral
26	High Speed Locknut—Not Shown—Used on Units 10 and 12
28	Oil Seal—High Speed Fan End
29	Fan
30	Fan Housing and Cap
31	Fan Housing Cover
33	High Speed Adjustment Spacer—Units 3 thru 9 only

*Series 3 thru 9 uses 2 Single Row Bearings. Series 10 and 12 uses 1 Single and 1 Double Row Bearing.

2

DIMENSIONS: SLOW SPEED SHAFT BORES (in inches)

3 SF			4 SF			5 SF			6 SF			7 SF			8 SF		
W‡	Keyway	Length	W‡	Keyway	Length	W‡	Keyway	Length	W‡	Keyway	Length	W‡	Keyway	Length	W‡	Keyway	Length
3/4	3/16x3/32	6 1/4	15/16	1/4x1/8	6 11/16	1 3/16	1/4x1/8	7 1/4	1 3/16	1/4x1/8	8	1 5/8	3/8x3/16	8 1/2	1 11/16	3/8x3/16	10 1/2
13/16	3/16x3/32	6 1/4	**1**	1/4x1/8	6 11/16	1 1/4	1/4x1/8	7 1/4	**1 1/4**	1/4x1/8	8	1 11/16	3/8x3/16	8 1/2	**1 3/4**	3/8x3/16	10 1/2
7/8	3/16x3/32	6 1/4	1 1/16	1/4x1/8	6 11/16	1 3/8	5/16x5/32	7 1/4	**1 3/8**	5/16x5/32	8	1 3/4	3/8x3/16	8 1/2	1 7/8	1/2x1/4	10 1/2
15/16	1/4x1/8	6 1/4	1 1/8	1/4x1/8	6 11/16	1 7/16	3/8x3/16	7 1/4	**1 7/16**	3/8x3/16	8	1 7/8	1/2x1/4	8 1/2	**1 15/16**	1/2x1/4	10 1/2
1	1/4x1/8	6 1/4	1 3/16	1/4x1/8	6 11/16	**1 1/2**	3/8x3/16	7 1/4	**1 1/2**	3/8x3/16	8	1 15/16	1/2x1/4	8 1/2	**2**	1/2x1/4	10 1/2
1 1/16	1/4x1/8	6 1/4	**1 1/4**	1/4x1/8	6 11/16	**1 5/8**	3/8x3/16	7 1/4	1 5/8	3/8x3/16	8	2	1/2x1/4	8 1/2	**2 3/16**	1/2x1/4	10 1/2
1 1/8	1/4x1/8	6 1/4	1 3/8	5/16x5/32	6 11/16	1 11/16	3/8x3/16	7 1/4	1 11/16	3/8x3/16	8	**2 3/16**	1/2x1/4	8 1/2	2 1/4	1/2x1/4	10 1/2
1 3/16	1/4x1/8	6 1/4	1 7/16	3/8x3/16	6 11/16	**1 3/4**	3/8x3/16	7 1/4	**1 3/4**	3/8x3/16	8	2 1/4	1/2x1/4	8 1/2	**2 7/16**	5/8x5/16	10 1/2
1 1/4	1/4x1/8	6 1/4	**1 1/2**	3/8x3/16	6 11/16	**1 7/8**	1/2x3/16	7 1/4	1 7/8	1/2x1/4	8	**2 7/16**	5/8x7/32	8 1/2	**2 1/2**	5/8x3/16	10 1/2
			1 5/8	3/8x1/8	6 11/16				**1 15/16**	1/2x1/4	8				2 11/16	5/8x5/16	10 1/2
			1 11/16	3/8x1/8	6 11/16				**2**	1/2x1/4	8				2 3/4	5/8x5/16	10 1/2
									2 3/16	1/2x1/8	8				**2 15/16**	3/4x1/4	10 1/2
															3	3/4x1/4	10 1/2

9 SF			10 SF			12 SF		
W‡	Keyway	Length	W‡	Keyway	Length	W‡	Keyway	Length
2 3/16	1/2x1/4	10 3/4	**2 3/16**	1/2x1/4	11 3/4	2 11/16	5/8x5/16	13 3/4
2 1/4	1/2x1/4	10 3/4	2 1/4	1/2x1/4	11 3/4	2 3/4	5/8x5/16	13 3/4
2 7/16	5/8x5/16	10 3/4	**2 7/16**	5/8x5/16	11 3/4	2 15/16	3/4x3/8	13 3/4
2 1/2	5/8x5/16	10 3/4	2 1/2	5/8x5/16	11 3/4	**3**	3/4x3/8	13 3/4
2 11/16	5/8x5/16	10 3/4	**2 11/16**	5/8x5/16	11 3/4	3 3/16	3/4x3/8	13 3/4
2 3/4	5/8x5/16	10 3/4	**2 3/4**	5/8x5/16	11 3/4	**3 7/16**	7/8x7/16	13 3/4
2 15/16	3/4x3/8	10 3/4	**2 15/16**	3/4x3/8	11 3/4	3 15/16	1x1/2	13 3/4
3	3/4x3/8	10 3/4	**3**	3/4x3/8	11 3/4	4 3/16	1x1/2	13 3/4
3 3/16	3/4x3/8	10 3/4	3 3/16	3/4x3/8	11 3/4	4 7/16	1x1/2	13 3/4
3 7/16	7/8x7/16	10 3/4	**3 7/16**	7/8x7/16	11 3/4			

‡ Bore Tolerances + .000, + .002.

For improved availability, specify bore sizes shown in bold type (super standards) whenever possible. Some bore sizes may require a premium. See price list for details.

SHAFT ARRANGEMENTS:
(STANDARD MOUNTING POSITIONS EXACTLY AS SHOWN)*

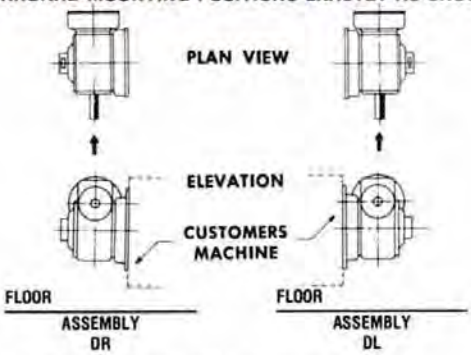

(A) Reducer viewed looking at input shaft.
(B) No extra charge for the above assemblies provided shaft extensions are standard.
(C) The input shaft may be driven in either direction.
*NOTE: Standard mounting position is exactly as shown. If motor is to be oriented in any other position, so state on order.

WINSMITH

single reduction—fan cooled—hollow shaft

SERIES: FST

GEAR RATIOS AVAILABLE 5:1 THRU 60:1
COMPLETE TORQUE AND HP RATINGS ..... PAGES 122-150
OVERHUNG LOAD RATINGS ..... PAGES 123-223
SERVICE FACTORS ..... PAGE 230
COUPLING ADAPTERS ..... PAGE 120
HYDRAULIC MOTOR ADAPTERS ..... PAGE 116

TABLE OF WEIGHTS

Unit	3	4	5	6	7	8	9	10	12
Net Weight	23	39	62	71	130	149	235	255	395

DIMENSIONS:

*Output shaft should rotate in a direction that keeps the torque reaction arm in tension. If otherwise, contact the factory.

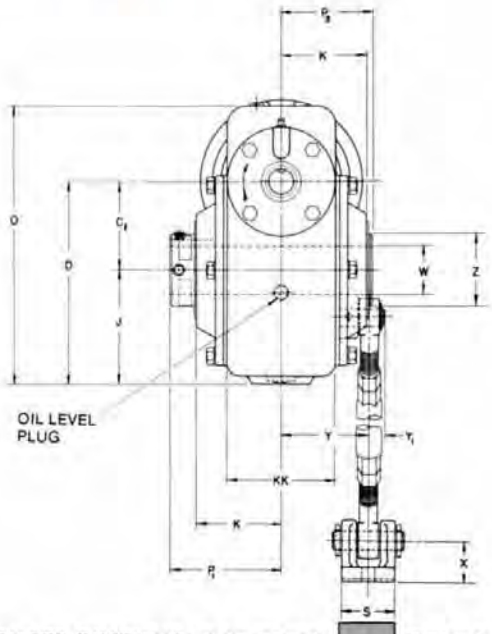

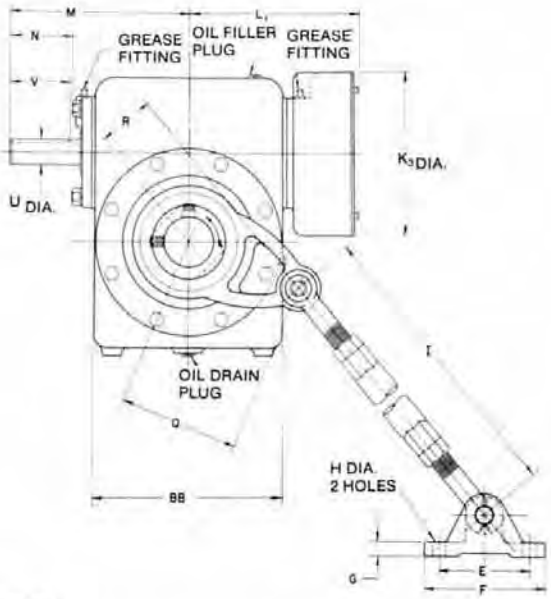

SPEED REDUCER DIMENSIONS (in inches) Refer to D Line for these sizes.

Unit	BB	C_1	D	E	F	G	H	I max	I min	J	K	KK	K_3 dia.	L_1	M	O	P_1	P_2	Q	Rmin	S	X	Y	Y_1	Z	High Speed Shaft U*	N	V	Keyway
3 FST	4 5/16	2	4 5/8	2 7/8	3 3/4	3/8	11/32	20	14	2 5/8	2 5/8	3	4 1/2	4 5/8	4 3/4	6 1/4	3 3/8	2 7/8	3	2 1/2	1 1/4	1 1/8	2 3/8	3/8	1 3/4	5/8	1 7/8	1 3/4	3/16x3/32
4 FST	6 1/8	2 5/8	6 1/8	3	4	3/8	13/32	23 1/2	18	3 1/2	2 13/16	3 1/4	5 3/4	5 13/16	6	8 3/8	3 11/16	3	3 3/4	3	1 3/4	1 3/8	2 11/16	1/2	2 1/4	3/4	2 1/16	2	3/16x3/32
5 FST	6 3/4	3	7	3	4	3/8	13/32	23 1/2	18	4	3	4	6	6 1/4	6 1/2	9 5/8	4 3/16	3 3/16	4 1/4	3 1/2	1 3/4	1 3/8	3 1/16	1/2	2 11/16	7/8	2 3/16	2 1/4	3/16x3/32
6 FST	7 1/2	3 1/2	8	3 1/2	4 3/4	9/16	17/32	29	21	4 1/2	3 3/8	4 3/8	6 1/2	6 11/16	7 1/16	11	4 7/16	3 9/16	4 3/4	4	2 1/8	1 5/8	3 1/2	5/8	2 7/8	1	2 9/16	2 1/2	1/4x1/8
7 FST	9 3/16	4	9	3 1/2	4 3/4	9/16	17/32	29	21	5	3 5/8	5	8	7 9/16	8	13	4 11/16	3 13/16	5 1/2	4 1/2	2 1/8	1 5/8	3 5/8	5/8	3 5/8	1	2 1/2	2 1/2	1/4x1/8
8 FST	10 5/8	4.6	10.1	3 1/2	4 3/4	9/16	17/32	29	21	5 1/2	4 5/8	6 1/8	9 1/4	8 5/16	9	14 1/2	5 11/16	4 13/16	6 1/8	5	2 1/8	1 5/8	4 7/16	5/8	4 1/4	1 1/8	2 3/4	2 3/4	1/4x1/8
9 FST	11 11/16	5.167	11.167	5	6 3/4	3/4	13/16	31	22	6	4 5/8	5 1/2	9 1/4	8 13/16	9 1/2	14 3/4	5 13/16	4 15/16	6 3/4	5 1/2	2 1/16	1 15/16	4 5/16	11/16	5 5/8	1 1/8	2 3/4	2 3/4	1/4x1/8
10 FST	12 7/8	6	13	5	6 3/4	3/4	13/16	31	22	7	5 1/8	6 5/16	10 1/4	10 1/2	10 1/4	18 1/2	6 5/16	5 7/16	8	6	2 1/16	1 15/16	4 1/2	1 11/32	5 5/8	1 1/4	2 11/16	2 3/4	1/4x1/8
12 FST	15 3/4	7	15 1/2	5 3/4	7 3/4	7/8	15/16	37 1/2	26 1/2	8 1/2	6 1/8	7 1/2	12 1/4	12 7/16	12 3/8	21 1/2	7 5/16	6 7/16	9 13/16	7	2 11/16	2 3/8	5 13/32	1 21/32	6 1/2	1 1/2	3 3/8	3 3/8	3/8x3/16

*Shaft diameter tolerances + .000 – .001. For construction purposes send for Certified Dimension Sheets.

single reduction
fan cooled—hollow shaft

PARTS LIST:

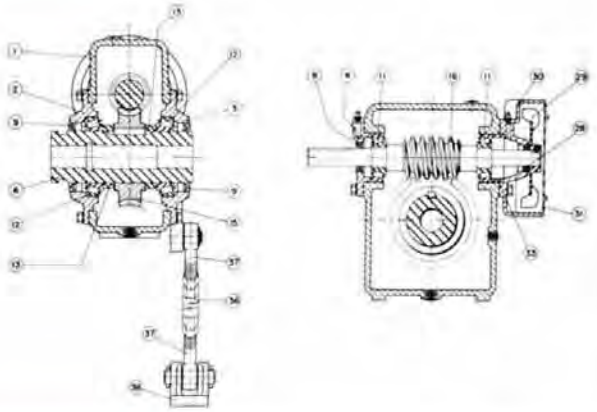

PARTS INDEX

Part No.	Description
1	Housing
2	Slow Speed Cover
3	Slow Speed Cover With Torque Arm Lug
4	High Speed Cover—Open
5A	High Speed Adapter—Not Shown—Used with Fan HSG and Cap Units 10 and 12
6	Slow Speed Shaft—Hollow
8	Oil Seal—High Speed
9	Oil Seal—Slow Speed
*11	Roller Bearings—High Speed
12	Roller Bearings—Slow Speed
13	Slow Speed Spacer (Not Used on Size 3 or 7 only)
15	Slow Speed Worm Gear—Bronze
16	High Speed Worm and Shaft Integral
26	High Speed Locknut—Not Shown—Used on Units 10 and 12
28	Oil Seal—High Speed Fan End
29	Fan
30	Fan Housing and Cap
31	Fan Housing Cover
33	High Speed Adjustment Spacer—Units 3 thru 9 only
36	Torque Arm Turnbuckle
37	Torque Arm Rod End—Right Hand & Left Hand
38	Floor Support

*Series 3 thru 9 uses 2 Single Row Bearings. Series 10 and 12 Uses 1 Single and 1 Double Row Bearing.

2

DIMENSIONS: SLOW SPEED SHAFT BORES (in inches)

3 SF			4 SF			5 SF			6 SF			7 SF			8 SF		
W‡	Keyway	Length	W‡	Keyway	Length	W‡	Keyway	Length	W‡	Keyway	Length	W‡	Keyway	Length	W‡	Keyway	Length
3/4	3/16x3/32	6 1/4	15/16	1/4x1/8	6 11/16	1 3/16	1/4x1/8	7 1/4	1 3/16	1/4x1/8	8	1 5/8	3/8x3/16	8 1/2	1 11/16	3/8x3/16	10 1/2
13/16	3/16x3/32	6 1/4	1	1/4x1/8	6 11/16	1 1/4	1/4x1/8	7 1/4	1 1/4	1/4x1/8	8	1 11/16	3/8x3/16	8 1/2	1 3/4	3/8x3/16	10 1/2
7/8	3/16x3/32	6 1/4	1 1/16	1/4x1/8	6 11/16	1 3/8	5/16x5/32	7 1/4	1 3/8	5/16x5/32	8	1 3/4	3/8x3/16	8 1/2	1 7/8	1/2x1/4	10 1/2
15/16	1/4x1/8	6 1/4	1 1/8	1/4x1/8	6 11/16	1 7/16	3/8x3/16	7 1/4	1 7/16	3/8x3/16	8	1 7/8	1/2x1/4	8 1/2	1 15/16	1/2x1/4	10 1/2
1	1/4x1/8	6 1/4	1 3/16	1/4x1/8	6 11/16	1 1/2	3/8x3/16	7 1/4	1 1/2	3/8x3/16	8	1 15/16	1/2x1/4	8 1/2	2	1/2x1/4	10 1/2
1 1/16	1/4x1/8	6 1/4	1 1/4	1/4x1/8	6 11/16	1 5/8	3/8x3/16	7 1/4	1 5/8	3/8x3/16	8	2	1/2x1/4	8 1/2	2 3/16	1/2x1/4	10 1/2
1 1/8	1/4x1/8	6 1/4	1 3/8	5/16x5/32	6 11/16	1 11/16	3/8x3/16	7 1/4	1 11/16	3/8x3/16	8	2 3/16	1/2x1/4	8 1/2	2 1/4	1/2x1/4	10 1/2
1 3/16	1/4x1/8	6 1/4	1 7/16	3/8x3/16	6 11/16	1 3/4	3/8x3/16	7 1/4	1 3/4	3/8x3/16	8	2 1/4	1/2x1/4	8 1/2	2 7/16	5/8x5/16	10 1/2
1 1/4	1/4x1/8	6 1/4	1 1/2	3/8x3/16	6 11/16	1 7/8	1/2x3/16	7 1/4	1 7/8	1/2x1/4	8	2 7/16	5/8x7/32	8 1/2	2 1/2	5/8x5/16	10 1/2
			1 5/8	3/8x1/8	6 11/16				1 15/16	1/2x1/4	8				2 11/16	3/8x3/16	10 1/2
			1 11/16	3/8x1/8	6 11/16				2	1/2x1/4	8				2 3/4	5/8x5/16	10 1/2
									2 3/16	1/2x1/8	8				2 15/16	3/4x1/4	10 1/2
															3	3/4x1/4	10 1/2

9 SF			10 SF			12 SF		
W‡	Keyway	Length	W‡	Keyway	Length	W‡	Keyway	Length
2 3/16	1/2x1/4	10 3/4	2 3/16	1/2x1/4	11 3/4	2 11/16	5/8x5/16	13 3/4
2 1/4	1/2x1/4	10 3/4	2 1/4	1/2x1/4	11 3/4	2 3/4	5/8x5/16	13 3/4
2 7/16	5/8x5/16	10 3/4	2 7/16	5/8x5/16	11 3/4	2 15/16	3/4x3/8	13 3/4
2 1/2	5/8x5/16	10 3/4	2 1/2	5/8x5/16	11 3/4	3	3/4x3/8	13 3/4
2 11/16	5/8x5/16	10 3/4	2 11/16	5/8x5/16	11 3/4	3 3/16	3/4x3/8	13 3/4
2 3/4	5/8x5/16	10 3/4	2 3/4	5/8x5/16	11 3/4	3 7/16	7/8x7/16	13 3/4
2 15/16	3/4x3/8	10 3/4	2 15/16	3/4x3/8	11 3/4	3 15/16	1x1/2	13 3/4
3	3/4x3/8	10 3/4	3	3/4x3/8	11 3/4	4 3/16	1x1/2	13 3/4
3 3/16	3/4x3/8	10 3/4	3 3/16	3/4x3/8	11 3/4	4 7/16	1x1/2	13 3/4
3 7/16	7/8x7/16	10 3/4	3 7/16	7/8x7/16	11 3/4			

‡ Bore Tolerances + .000, + .002.

For improved availability, specify bore sizes shown in bold type (super standards) whenever possible. Some bore sizes may require a premium. See price list for details.

SHAFT ARRANGEMENTS:
(STANDARD MOUNTING POSITIONS EXACTLY AS SHOWN)*

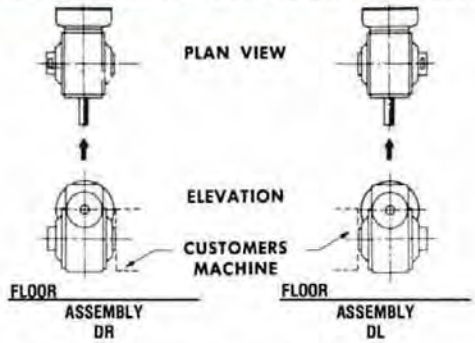

(A) Reducer viewed looking at input shaft.
(B) No extra charge for the above assemblies provided shaft extensions are standard.
(C) The input shaft may be driven in either direction.
*NOTE: Standard mounting position is exactly as shown. If motor is to be oriented in any other position, so state on order.

WINSMITH

single reduction—motorized and gearmotor

SERIES: MSF-
MSFW (WITH MOTOR)

GEAR RATIOS AVAILABLE 5:1 THRU 60:1

COMPLETE TORQUE AND HP RATINGS ..... PAGES 122-150
OVERHUNG LOAD RATINGS .....PAGES 123-223
SERVICE FACTORS ..... PAGE 230
COUPLING ADAPTERS ..... PAGE 120
HYDRAULIC MOTOR ADAPTERS ..... PAGE 116

TABLE OF WEIGHTS

Unit	3	4	5	6	7	8	9
Net Weight	20	34	59	80	125	140	255

Weights are without motor.
Also available with foot mounted housing #CB - CT Type, consult factory.

SFMW
See page 120.

DIMENSIONS:

FRAME, KEYWAY and BORE DIMENSIONS

Frame No.	56C	143TC 145TC	182TC 184TC 213TCZ* 215TCZ*
AJ	5⅞	5⅞	7¼
AK	4½	4½	8½
BB	3/16	3/16	3/16
BD	6½	6½	9
BE	5/16	5/16	⅜
BF	13/32	13/32	17/32
Keyway	3/16 x 3/32	3/16 x 3/32	¼ x ⅛
Bore +.001 −.000	.6255	.8755	1.1255*

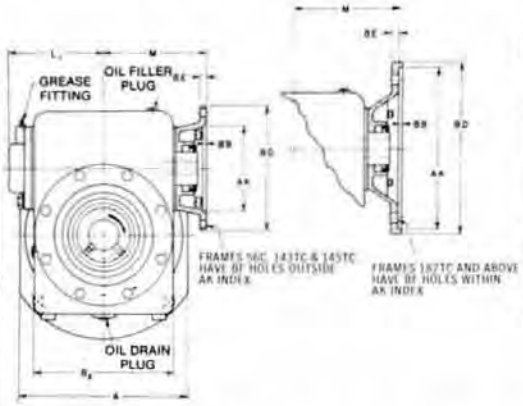

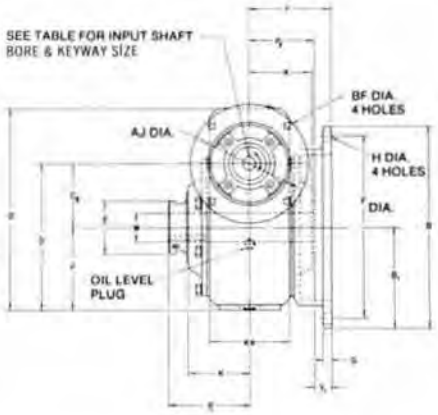

SPEED REDUCER DIMENSIONS (in inches) Refer to D Line for these sizes.

Unit	A	B	B_1	B_2	C_1	D	F Dia.	G	H	J	K	KK	L_1	M	O	P_1	P_2	Y	Y_1	Z	Maximum Frame Size
3MSF	5¾	7⅜	3 11/16	4 9/16	2	4⅝	6½	⅜	13/32	2⅝	2⅝	3	3 9/16	3⅞	6¼	3⅝	2⅞	3⅛	½	1¾	145TC-184C
4MSF	7¾	8⅞	4 7/16	6⅛	2⅝	6⅛	8	⅜	13/32	3½	2 13/16	3¼	4¼	4½	8⅜	3 11/16	3	3⅝	⅝	2¼	145TC-184C
5MSF	8	10½	5¼	6¾	3	7	9¼	½	9/16	4	3	4	4½	5⅛	9⅝	4 1/16	3 3/16	5	1 15/16	2 11/16	184TC-215C
6MSF	9	11	5½	7½	3½	8	10	½	9/16	4½	3⅜	4⅜	5	5½	11	4 7/16	3 9/16	5	1 7/16	2⅞	184TC-215C
7MSF	10½	13	6½	9 5/16	4	9	11½	⅝	11/16	5	3⅝	5	5⅞	6⅜	13	4 11/16	3 13/16	5¾	1 15/16	3⅜	184TC-215C
8MSF	12¼	14¼	7⅛	10⅝	4.6	10.1	13	⅝	11/16	5½	4⅝	6⅛	6⅝	7⅛	14½	5 11/16	4 13/16	5¾	15/16	4¼	184TC-215C
9MSF	12½	15½	7¾	11 11/16	5.17	11.17	14	¾	11/16	6	4⅝	5½	6¾	8 9/16	14¾	5 13/16	4 15/16	7	2 1/16	5⅜	254TC-256TC

For construction purposes send for Certified Dimension Sheets.

MOTOR DIMENSIONS:

H.P. @ 1800 RPM	1/6		¼		⅓		½		¾		1	1½	2	3	5
Phase	Single *	Three	Single *	Three	Single *	Three	Single *	Three	Single *	Three	Three	Three	Three	Three	Three
AG	7½	7½	7¾	8¼	8¼	8¾	8¾	8¾	9¼	9¼	9¾	10¾	10¾	12¼	13¾
AP	5 21/32	5 21/32	5 21/32	5 21/32	6 31/64	6 31/64	6 31/64	6 31/64	6 31/64	6 31/64	6 31/64	6 31/64	6 31/64	10 11/32	10 11/32

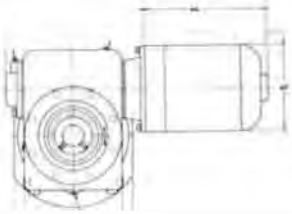

*Single phase motor is capacitor start. Dimensions as shown are for open dripproof enclosure. Motors can be furnished open dripproof or enclosed.

PARTS LIST:

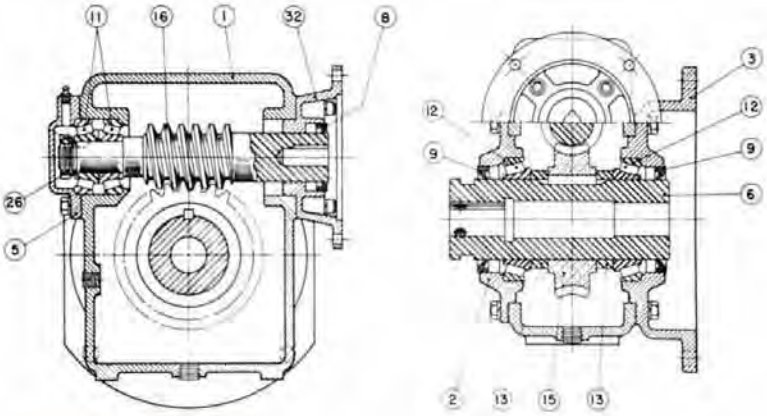

PARTS INDEX

Part No.	Description
1	Housing
2	Slow Speed Cover
3	Slow Speed Cover and Base
5	High Speed Cover — Closed
6	Slow Speed Shaft — Hollow
8	Oil Seal — High Speed
9	Oil Seal — Slow Speed
11	Roller Bearings — High Speed
12	Roller Bearing — Slow Speed
13	Slow Speed Spacer (Not Used on Size 3 or 7 only)
15	Slow Speed Worm Gear — Bronze
16	High Speed Worm and Shaft Integral
26	High Speed Lock Nut
32	Motor Adapter
32B	Motor Adapter Spacer (Size 4 only)

2

DIMENSIONS: SLOW SPEED SHAFT BORES (in inches)

3 SF			4 SF			5 SF			6 SF			7 SF			8 SF		
W‡	Keyway	Length	W‡	Keyway	Length	W‡	Keyway	Length	W‡	Keyway	Length	W‡	Keyway	Length	W‡	Keyway	Length
3/4	3/16x3/32	6 1/4	15/16	1/4x1/8	6 11/16	1 3/16	1/4x1/8	7 1/4	1 3/16	1/4x1/8	8	1 5/8	3/8x3/16	8 1/2	1 11/16	3/8x3/16	10 1/2
13/16	3/16x3/32	6 1/4	**1**	1/4x1/8	6 11/16	1 1/4	1/4x1/8	7 1/4	**1 1/4**	1/4x1/8	8	1 11/16	3/8x3/16	8 1/2	**1 3/4**	3/8x3/16	10 1/2
7/8	3/16x3/32	6 1/4	1 1/16	1/4x1/8	6 11/16	1 3/8	5/16x5/32	7 1/4	**1 3/8**	5/16x5/32	8	1 3/4	3/8x3/16	8 1/2	1 7/8	1/2x1/4	10 1/2
15/16	1/4x1/8	6 1/4	1 1/8	1/4x1/8	6 11/16	1 7/16	3/8x3/16	7 1/4	**1 7/16**	3/8x3/16	8	1 7/8	1/2x1/4	8 1/2	**1 15/16**	1/2x1/4	10 1/2
1	1/4x1/8	6 1/4	1 3/16	1/4x1/8	6 11/16	**1 1/2**	3/8x3/16	7 1/4	**1 1/2**	3/8x3/16	8	1 15/16	1/2x1/4	8 1/2	**2**	1/2x1/4	10 1/2
1 1/16	1/4x1/8	6 1/4	**1 1/4**	1/4x1/8	6 11/16	**1 5/8**	3/8x3/16	7 1/4	1 5/8	3/8x3/16	8	2	1/2x1/4	8 1/2	**2 3/16**	1/2x1/4	10 1/2
1 1/8	1/4x1/8	6 1/4	1 3/8	5/16x5/32	6 11/16	1 11/16	3/8x3/16	7 1/4	1 11/16	3/8x3/16	8	**2 3/16**	1/2x1/4	8 1/2	2 1/4	1/2x1/4	10 1/2
1 3/16	1/4x1/8	6 1/4	1 7/16	3/8x3/16	6 11/16	**1 3/4**	3/8x3/16	7 1/4	**1 3/4**	3/8x3/16	8	2 1/4	1/2x1/4	8 1/2	**2 7/16**	5/8x5/16	10 1/2
1 1/4	1/4x1/8	6 1/4	**1 1/2**	3/8x3/16	6 11/16	**1 7/8**	1/2x3/16	7 1/4	1 7/8	1/2x1/4	8	**2 7/16**	5/8x7/32	8 1/2	**2 1/2**	5/8x5/16	10 1/2
			1 5/8	3/8x1/8	6 11/16				**1 15/16**	1/2x1/4	8				2 11/16	5/8x5/16	10 1/2
			1 11/16	3/8x1/8	6 11/16				**2**	1/2x1/4	8				2 3/4	5/8x5/16	10 1/2
									2 3/16	1/2x1/8	8				**2 15/16**	3/4x1/4	10 1/2
															3	3/4x1/4	10 1/2

9 SF		
W‡	Keyway	Length
2 3/16	1/2x1/4	10 3/4
2 1/4	1/2x1/4	10 3/4
2 7/16	5/8x5/16	10 3/4
2 1/2	5/8x5/16	10 3/4
2 11/16	5/8x5/16	10 3/4
2 3/4	5/8x5/16	10 3/4
2 15/16	3/4x3/8	10 3/4
3	3/4x3/8	10 3/4
3 3/16	3/4x3/8	10 3/4
3 7/16	7/8x7/16	10 3/4

‡ Bore Tolerances + .000, + .002.

SHAFT ARRANGEMENTS:
(STANDARD MOUNTING POSITIONS EXACTLY AS SHOWN)*

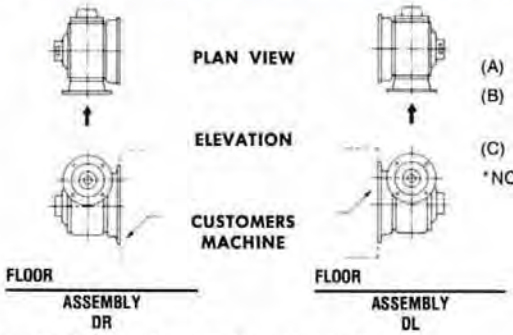

(A) Reducer viewed looking at input shaft.

(B) No extra charge for these assemblies provided shaft extensions are standard.

(C) The input shaft may be driven in either direction.

*NOTE: Standard mounting position is exactly as shown. If motor is to be oriented in any other position, so state on order.

For improved availability, specify bore sizes shown in bold type (super standards) whenever possible. Some bore sizes may require a premium. See price list for details.

WINSMITH

single reduction — motorized and gearmotor

SERIES: MST-
MSTW (WITH MOTOR)

GEAR RATIOS AVAILABLE 5:1 THRU 60:1
COMPLETE TORQUE AND HP RATINGS ..... PAGES 122-150
OVERHUNG LOAD RATINGS ..... PAGES 123-223
SERVICE FACTORS ..... PAGE 230
COUPLING ADAPTERS ..... PAGE 120
HYDRAULIC MOTOR ADAPTERS ..... PAGE 116

TABLE OF WEIGHTS

Unit	3	4	5	6	7	8	9
Net Weight	20	34	59	65	125	140	255

Also available with foot mounted housing #CB - CT type, consult factory.

*Output shaft should rotate in a direction that keeps the torque reaction arm in tension. If otherwise, contact the factory.

STMW
See page 120.

DIMENSIONS: Dimensions apply to speed reducer only.

FRAME, KEYWAY and BORE DIMENSIONS

Frame No.	56C	143TC 145TC	182TC 184TC 213TCZ* 215TCZ*
AJ	5⅞	5⅞	7¼
AK	4½	4½	8½
BB	3/16	3/16	3/16
BD	6½	6½	9
BE	5/16	5/16	⅜
BF	13/32	13/32	17/32
Keyway	3/16 × 3/32	3/16 × 3/32	¼ × ⅛
Bore +.001 −.000	.6255	.8755	1.1255*

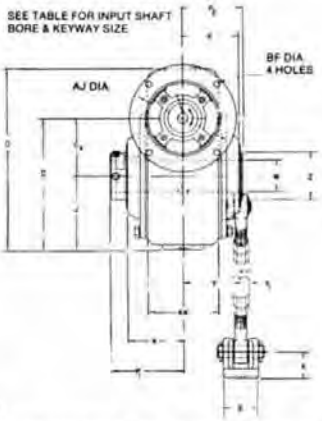

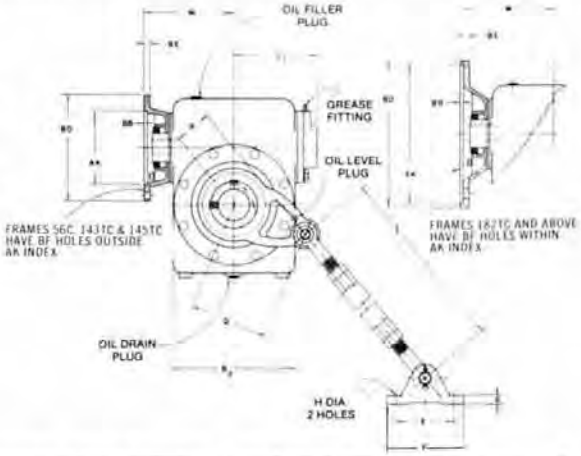

SPEED REDUCER DIMENSIONS (in inches)

Unit	B_2	C_1	D	E	F	G	H	$I_{Max.}$	$I_{Min.}$	J	K	KK	L_1	M	O	P_1	P_2	Q	$R_{Min.}$	S	X	Y	Y_1	Z	Maximum Frame Size
3MST	4 5/16	2	4⅝	2⅞	3¾	⅜	11/32	20	14	2⅝	2⅝	2 15/16	3 9/16	3⅞	6¼	3⅜	2⅞	3	2½	1¼	1⅛	2⅜	⅜	1¾	145TC-184C
4MST	6⅛	2¾	6⅛	3	4	⅜	13/32	23½	16	3½	2 13/16	3¼	4¼	4½	8⅜	3 11/16	3	3¾	3	1¾	1⅜	2 11/16	½	2¼	145TC-184C
5MST	6¾	3	7	3	4	⅜	13/32	23½	18	4	3	4	4½	5⅛	9⅝	4 1/16	3 9/16	4¼	3½	1¾	1⅜	3 1/16	½	2 11/16	184TC-215C
6MST	7½	3½	8	3½	4¾	9/16	17/32	29	21	4½	3⅜	4⅜	5	5½	11	4 7/16	3 9/16	4¾	4	2⅛	1⅝	3½	⅝	2⅞	184TC-215C
7MST	9 3/16	4	9	3½	4¾	9/16	17/32	29	21	5	3⅜	5	5⅞	6⅜	13	4 11/16	3 13/16	5½	4½	2⅛	1⅝	3⅝	⅝	3⅝	184TC-215C
8MST	10⅝	4.6	10.1	3½	4¾	9/16	17/32	29	21	5½	4⅝	6⅛	6⅝	7⅛	14½	5 11/16	4 13/16	6⅛	5	2⅛	1⅝	4 7/16	⅝	4¼	184TC-215C
9MST	11 11/16	5.17	11.17	5	6¾	¾	13/16	31	22	6	4⅝	5½	6¾	8 5/16	14¾	5 13/16	4 15/16	6¾	5½	2 1/16	1 15/16	4⅝	11/16	5⅜	254TC-256TC

For construction purposes send for Certified Dimension Sheets.

☐ Refer to D Line for these sizes.

MOTOR DIMENSIONS:

H.P. @ 1800 RPM	1/6		1/4		1/3		1/2		3/4		1	1½	2	3	5
Phase	Single *	Three	Single *	Three	Single *	Three	Single *	Three	Single *	Three	Three	Three	Three	Three	Three
AG	7½	7½	7¾	8¼	8¼	8¾	8¾	8¾	9¼	9¼	9¾	10¾	10¾	12¼	13¾
AP	5 21/32	5 21/32	5 21/32	5 21/32	6 31/64	6 31/64	6 31/64	6 31/64	6 31/64	6 31/64	6 31/64	6 31/64	6 31/64	10 11/32	10 11/32

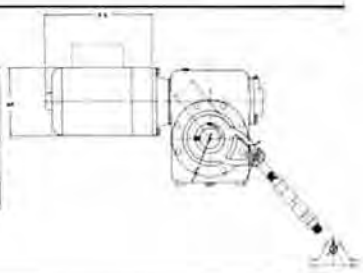

*Single phase motor is capacitor start. Dimensions as shown are for open dripproof enclosure. Motors can be furnished open dripproof or enclosed.

PARTS LIST:

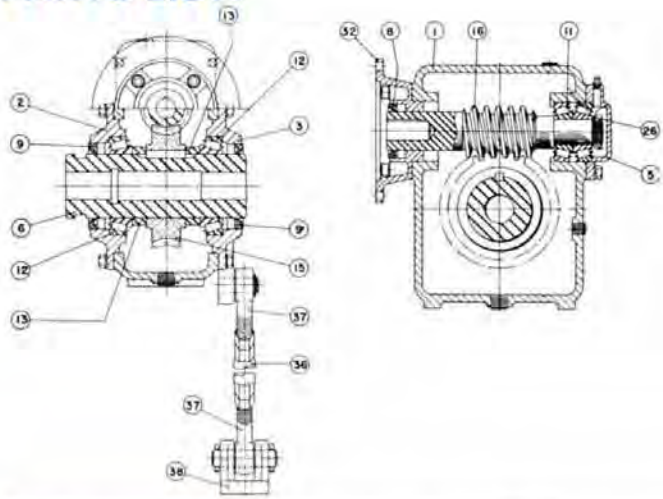

PARTS INDEX

Part No.	Description
1	Housing
2	Slow Speed Cover
3	Slow Speed Cover with Torque Arm Lug
5	High Speed Cap Closed
6	Slow Speed Shaft — Hollow
8	Oil Seal — Motor Adapter End
9	Oil Seal — Slow Speed
11	Roller Bearings — High Speed
12	Roller Bearings — Slow Speed
13	Slow Speed Spacer (Not Used on Size 3 or 7 only)
15	Slow Speed Worm Gear — Bronze
16	High Speed Worm and Shaft Integral
26	High Speed Lock Nut
32	Motor Adapter
32B	Motor Adapter Spacer (Size 4 only)
36	Torque Arm Turnbuckle
37	Torque Arm Rod End — Right Hand & Left Hand
38	Floor Support

2

DIMENSIONS: SLOW SPEED SHAFT BORES (in inches)

3 SF			4 SF			5 SF			6 SF			7 SF			8 SF		
W‡	Keyway	Length	W‡	Keyway	Length	W‡	Keyway	Length	W‡	Keyway	Length	W‡	Keyway	Length	W‡	Keyway	Length
3/4	3/16x3/32	6 1/4	15/16	1/4x1/8	6 11/16	13/16	1/4x1/8	7 1/4	13/16	1/4x1/8	8	1 5/8	3/8x3/16	8 1/2	1 11/16	3/8x3/16	10 1/2
13/16	3/16x3/32	6 1/4	**1**	1/4x1/8	6 11/16	1 1/4	1/4x1/8	7 1/4	**1 1/4**	1/4x1/8	8	1 11/16	3/8x3/16	8 1/2	**1 3/4**	3/8x3/16	10 1/2
7/8	3/16x3/32	6 1/4	1 1/16	1/4x1/8	6 11/16	1 3/8	5/16x5/32	7 1/4	**1 3/8**	5/16x5/32	8	1 3/4	3/8x3/16	8 1/2	1 7/8	1/2x1/4	10 1/2
15/16	1/4x1/8	6 1/4	1 1/8	1/4x1/8	6 11/16	1 7/16	3/8x3/16	7 1/4	**1 7/16**	3/8x3/16	8	1 7/8	1/2x1/4	8 1/2	**1 15/16**	1/2x1/4	10 1/2
1	1/4x1/8	6 1/4	1 3/16	1/4x1/8	6 11/16	**1 1/2**	3/8x3/16	7 1/4	**1 1/2**	3/8x3/16	8	1 15/16	1/2x1/4	8 1/2	**2**	1/2x1/4	10 1/2
1 1/16	1/4x1/8	6 1/4	**1 1/4**	1/4x1/8	6 11/16	**1 5/8**	3/8x3/16	7 1/4	1 5/8	3/8x3/16	8	2	1/2x1/4	8 1/2	**2 3/16**	1/2x1/4	10 1/2
1 1/8	1/4x1/8	6 1/4	1 3/8	5/16x5/32	6 11/16	1 11/16	3/8x3/16	7 1/4	1 11/16	3/8x3/16	8	**2 3/16**	1/2x1/4	8 1/2	2 1/4	1/2x1/4	10 1/2
1 3/16	1/4x1/8	6 1/4	1 7/16	3/8x3/16	6 11/16	**1 3/4**	3/8x3/16	7 1/4	**1 3/4**	3/8x3/16	8	2 1/4	1/2x1/4	8 1/2	**2 7/16**	5/8x5/16	10 1/2
1 1/4	1/4x1/8	6 1/4	**1 1/2**	3/8x3/16	6 11/16	**1 7/8**	1/2x3/16	7 1/4	1 7/8	1/2x1/4	8	**2 7/16**	5/8x7/32	8 1/2	**2 1/2**	5/8x5/16	10 1/2
			1 5/8	3/8x1/8	6 11/16				**1 15/16**	1/2x1/4	8				2 11/16	5/8x5/16	10 1/2
			1 11/16	3/8x1/8	6 11/16				**2**	1/2x1/4	8				2 3/4	5/8x5/16	10 1/2
									2 3/16	1/2x1/8	8				**2 15/16**	3/4x1/4	10 1/2
															3	3/4x1/4	10 1/2

9 SF		
W‡	Keyway	Length
2 3/16	1/2x1/4	10 3/4
2 1/4	1/2x1/4	10 3/4
2 7/16	5/8x5/16	10 3/4
2 1/2	5/8x5/16	10 3/4
2 11/16	5/8x5/16	10 3/4
2 3/4	5/8x5/16	10 3/4
2 15/16	3/4x3/8	10 3/4
3	3/4x3/8	10 3/4
3 3/16	3/4x3/8	10 3/4
3 7/16	7/8x7/16	10 3/4

‡ Bore Tolerances + .000, + .002.

For improved availability, specify bore sizes shown in bold type (super standards) whenever possible. Some bore sizes may require a premium. See price list for details.

SHAFT ARRANGEMENTS:
(STANDARD MOUNTING POSITIONS EXACTLY AS SHOWN)*

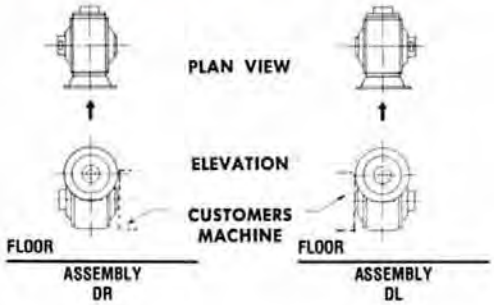

(A) Reducer viewed looking at input shaft.

(B) No extra charge for these assemblies provided the shaft extensions are standard.

(C) The input shaft may be driven in either direction.

*NOTE: Standard mounting position is exactly as shown. If motor is to be oriented in any other position, so state on order.

WINSMITH

single reduction—hollow shaft—fan cooled—motorized and gearmotor

SERIES: MFSF-MFSFW (WITH MOTOR)

GEAR RATIOS AVAILABLE 5:1 THRU 60:1

COMPLETE TORQUE AND HP RATINGS ..... PAGES 122-150
OVERHUNG LOAD RATINGS ..... PAGES 123-223
SERVICE FACTORS ..... PAGE 230
COUPLING ADAPTERS ..... PAGE 120
HYDRAULIC MOTOR ADAPTERS ..... PAGE 116

TABLE OF WEIGHTS

Unit	3	4	5	6	7	8	9
Net Weight	23	39	64	71	132	149	270

Weights are without motor.
Also available with foot mounted housing #CB - CT type, consult factory.

FSFMW
See page 120.

DIMENSIONS: Dimensions apply to speed reducer only.

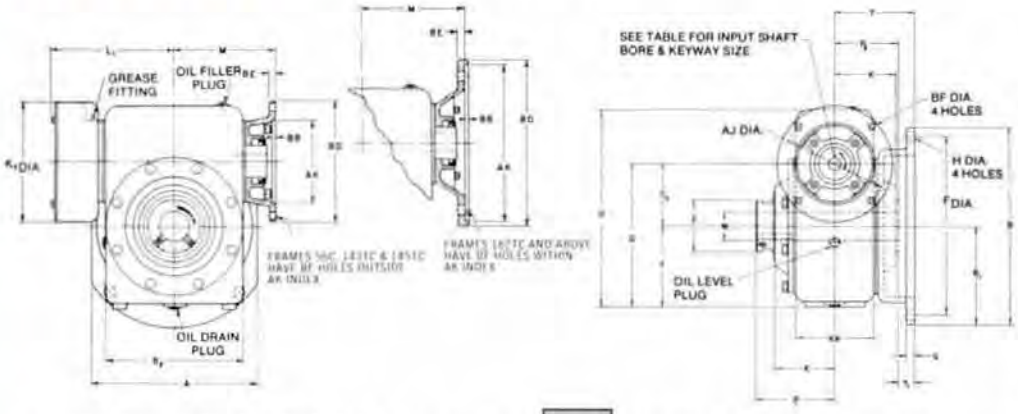

FRAME, KEYWAY and BORE DIMENSIONS

Frame No.	56C	143TC 145TC	182TC 184TC 213TC2* 215TC2*
AJ	5⅞	5⅞	7¼
AK	4½	4½	8½
BB	3/16	3/16	3/16
BD	6½	6½	9
BE	5/16	5/16	⅜
BF	13/32	13/32	17/32
Keyway	3/16 x 3/32	3/16 x 3/32	¼ x ⅛
Bore +.001 −.000	.6255	.8755	1.1255*

SPEED REDUCER DIMENSIONS (in inches) Refer to D Line for these sizes.

Unit	A	B	B_1	B_2	C_1	D	F Dia.	G	H	J	K	KK	K_3Dia.	L_1	M	O	P_1	P_2	Y	Y_1	Z	Maximum Frame Size
3MFSF	5¼	7⅜	3 11/16	4 5/16	2	4⅝	6½	⅜	13/32	2⅝	2⅝	3	4½	5	3⅞	6¼	3⅜	2⅛	3⅜	½	1¾	145TC-184C
4MFSF	7¼	8⅞	4 7/16	6⅛	2⅝	6⅛	8	⅜	13/32	3½	2 13/16	3¼	5¼	5 13/16	4½	8⅜	3 11/16	3	3⅝	⅝	2¼	145TC-184C
5MFSF	8	10½	5¼	6¾	3	7	9¼	½	5/16	4	3	4	6	6¼	5⅛	9⅝	4 1/16	3 9/16	5	1 13/16	2 11/16	184TC-215C
6MFSF	9	11	5½	7½	3½	8	10	½	5/16	4½	3⅜	4⅜	6½	6 11/16	5½	11	4 7/16	3 9/16	5	1 7/16	2⅛	184TC-215C
7MFSF	10½	13	6½	9 9/16	4	9	11½	⅝	11/16	5	3⅝	5	8	7 9/16	6⅜	13	4 11/16	3 13/16	5¾	1 15/16	3⅝	184TC-215C
8MFSF	12¼	14¼	7⅛	10⅝	4.6	10.1	13	⅝	11/16	5½	4⅝	6⅛	9¼	8 5/16	7⅛	14½	5 11/16	4 13/16	5¾	15/16	4¼	184TC-215C
9MFSF	12½	15½	7¾	11 11/16	5.17	11.17	14	¾	11/16	6	4⅝	5½	9¼	8 13/16	8 9/16	14¾	5 13/16	4 15/16	7	2 1/16	5⅜	254TC-256TC

For construction purposes send for Certified Dimension Sheets.

MOTOR DIMENSIONS:

H.P. @ 1800 RPM	1/6		¼		⅓		½		¾		1	1½	2	3	5
Phase	Single *	Three	Single *	Three	Single *	Three	Single *	Three	Single *	Three	Three	Three	Three	Three	Three
AG	7½	7½	7¾	8¼	8¼	8¾	8¾	8¾	9¼	9¼	9¾	10¾	10¾	12¼	13¾
AP	5 21/32	5 21/32	5 21/32	5 21/32	6 31/64	6 31/64	6 31/64	6 31/64	6 31/64	6 31/64	6 31/64	6 31/64	6 31/64	10 11/32	10 11/32

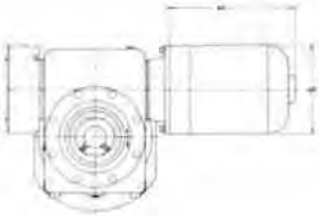

* Single phase motor is capacitor start. Dimensions as shown are for open dripproof enclosure. Motors can be furnished open dripproof or enclosed.

single reduction
hollow shaft — fan cooled — motorized and gearmotor

PARTS LIST:

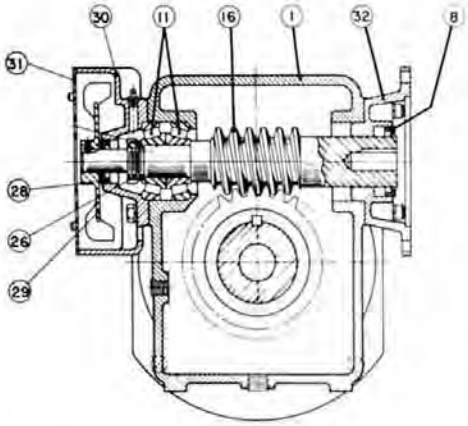

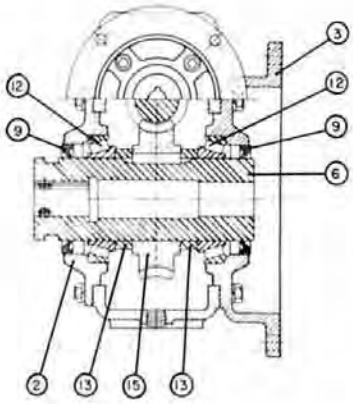

PARTS INDEX

Part No.	Description
1	Housing
2	Slow Speed Cover
3	Slow Speed Cover and Base
5	High Speed Cover — Closed
6	Slow Speed Shaft — Hollow
8	Oil Seal — High Speed Motor Adapter End
9	Oil Seal — Slow Speed
11	Roller Bearings — High Speed
12	Roller Bearing — Slow Speed
13	Slow Speed Spacer (Not Used on Size 3 or 7 only)
15	Slow Speed Worm Gear — Bronze
16	High Speed Worm and Shaft Integral
26	High Speed Lock Nut
28	Oil Seal — High Speed — Fan End
29	Fan
30	Fan Housing and Cap
31	Fan Housing Cover
32	Motor Adapter
32B	Motor Adapter Spacer (Size 4 only)

2

DIMENSIONS: SLOW SPEED SHAFT BORES (in inches)

3 SF			4 SF			5 SF			6 SF			7 SF			8 SF		
W‡	Keyway	Length	W‡	Keyway	Length	W‡	Keyway	Length	W‡	Keyway	Length	W‡	Keyway	Length	W‡	Keyway	Length
3/4	3/16x3/32	6 1/4	15/16	1/4x1/8	6 11/16	1 3/16	1/4x1/8	7 1/4	1 3/16	1/4x1/8	8	1 5/8	3/8x3/16	8 1/2	1 11/16	3/8x3/16	10 1/2
13/16	3/16x3/32	6 1/4	**1**	1/4x1/8	6 11/16	1 1/4	1/4x1/8	7 1/4	**1 1/4**	1/4x1/8	8	1 11/16	3/8x3/16	8 1/2	**1 3/4**	3/8x3/16	10 1/2
7/8	3/16x3/32	6 1/4	1 1/16	1/4x1/8	6 11/16	1 3/8	5/16x5/32	7 1/4	**1 3/8**	5/16x5/32	8	1 3/4	3/8x3/16	8 1/2	1 7/8	1/2x1/4	10 1/2
15/16	1/4x1/8	6 1/4	1 1/8	1/4x1/8	6 11/16	1 7/16	3/8x3/16	7 1/4	**1 7/16**	3/8x3/16	8	1 7/8	1/2x1/4	8 1/2	**1 15/16**	1/2x1/4	10 1/2
1	1/4x1/8	6 1/4	1 3/16	1/4x1/8	6 11/16	**1 1/2**	3/8x3/16	7 1/4	**1 1/2**	3/8x3/16	8	1 15/16	1/2x1/4	8 1/2	**2**	1/2x1/4	10 1/2
1 1/16	1/4x1/8	6 1/4	**1 1/4**	1/4x1/8	6 11/16	**1 5/8**	3/8x3/16	7 1/4	1 5/8	3/8x3/16	8	2	1/2x1/4	8 1/2	**2 3/16**	1/2x1/4	10 1/2
1 1/8	1/4x1/8	6 1/4	1 3/8	5/16x5/32	6 11/16	1 11/16	3/8x3/16	7 1/4	1 11/16	3/8x3/16	8	**2 3/16**	1/2x1/4	8 1/2	2 1/4	1/2x1/4	10 1/2
1 3/16	1/4x1/8	6 1/4	1 7/16	3/8x3/16	6 11/16	**1 3/4**	3/8x3/16	7 1/4	**1 3/4**	3/8x3/16	8	2 1/4	1/2x1/4	8 1/2	**2 7/16**	5/8x5/16	10 1/2
1 1/4	1/4x1/8	6 1/4	**1 1/2**	3/8x3/16	6 11/16	**1 7/8**	1/2x3/16	7 1/4	1 7/8	1/2x1/4	8	**2 7/16**	5/8x7/32	8 1/2	**2 1/2**	5/8x5/16	10 1/2
			1 5/8	3/8x1/8	6 11/16				**1 15/16**	1/2x1/4	8				2 11/16	5/8x5/16	10 1/2
			1 11/16	3/8x1/8	6 11/16				**2**	1/2x1/4	8				2 3/4	5/8x5/16	10 1/2
									2 3/16	1/2x1/8	8				**2 15/16**	3/4x1/4	10 1/2
															3	3/4x1/4	10 1/2

9 SF		
W‡	Keyway	Length
2 3/16	1/2x1/4	10 3/4
2 1/4	1/2x1/4	10 3/4
2 7/16	5/8x5/16	10 3/4
2 1/2	5/8x5/16	10 3/4
2 11/16	5/8x5/16	10 3/4
2 3/4	5/8x5/16	10 3/4
2 15/16	3/4x3/8	10 3/4
3	3/4x3/8	10 3/4
3 3/16	3/4x3/8	10 3/4
3 7/16	7/8x7/16	10 3/4

‡ Bore Tolerances + .000, + .002.

For improved availability, specify bore sizes shown in bold type (super standards) whenever possible. Some bore sizes may require a premium. See price list for details.

SHAFT ARRANGEMENTS:
(STANDARD MOUNTING POSITIONS EXACTLY AS SHOWN)*

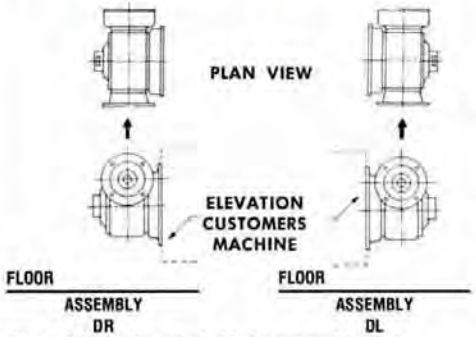

(A) Reducer viewed looking at input shaft.

(B) No extra charge for the above assemblies provided shaft extensions are standard.

(C) The input shaft may be driven in either direction.

*NOTE: Standard mounting position is exactly as shown. If motor is to be oriented in any other position, so state on order.

WINSMITH

single reduction—hollow shaft — fan cooled—motorized and gearmotor

SERIES: MFST-MFSTW (WITH MOTOR)

GEAR RATIOS AVAILABLE 5:1 THRU 60:1

COMPLETE TORQUE AND HP RATINGS ..... PAGES 122-150
OVERHUNG LOAD RATINGS ..... PAGES 123-223
SERVICE FACTORS ..... PAGE 230
COUPLING ADAPTERS ..... PAGE 120
HYDRAULIC MOTOR ADAPTERS ..... PAGE 116

TABLE OF WEIGHTS

Unit	3	4	5	6	7	8	9
Net Weight	23	39	64	71	132	149	270

Weights are without motor.

Also available with foot mounted housing #CB - CT type, consult factory.

FSTMW
See page 120

DIMENSIONS:

Dimensions apply to speed reducer only.

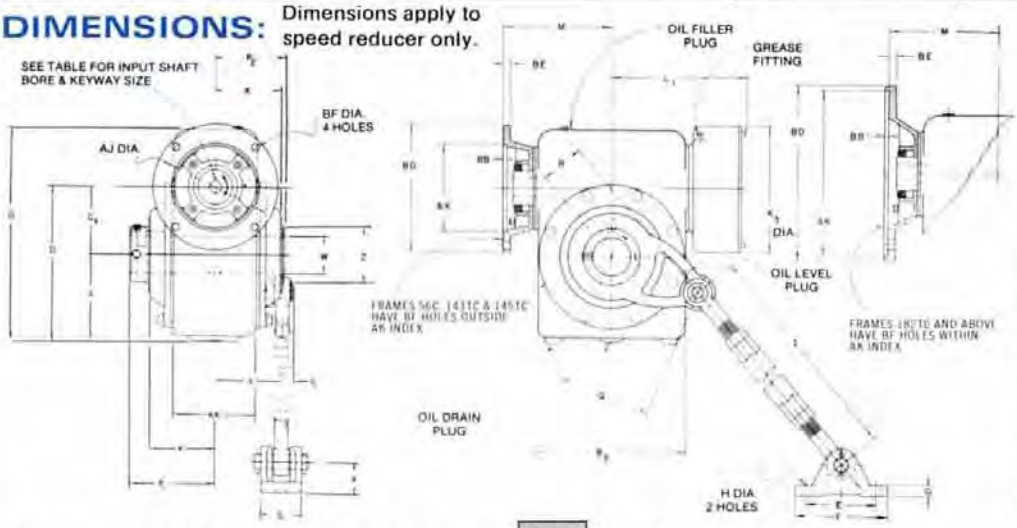

*Output shaft should rotate in a direction that keeps the torque reaction arm in tension. If otherwise, contact the factory.

FRAME, KEYWAY and BORE DIMENSIONS

Frame No.	56C	143TC 145TC	182TC 184TC 213TC2 215TC2 *
AJ	5 7/8	5 7/8	7 1/4
AK	4 1/2	4 1/2	8 1/2
BB	3/16	3/16	3/16
BD	6 1/2	6 1/2	9
BE	5/16	5/16	3/8
BF	13/32	13/32	17/32
Keyway	3/16 × 3/32	3/16 × 3/32	1/4 × 1/8
Bore +.001 −.000	.6255	.8755	1.1255*

SPEED REDUCER DIMENSIONS (in inches) Refer to D Line for these sizes.

Unit	B_2	C_1	D	E	F	G	H	I Max.	I Min.	J	K	KK	K_3 Dia.	L_1	M	O	P_1	P_2	Q	R Min.	S	X	Y	Y_1	Z	Maximum Frame Size
3MFST	4 9/16	2	4 5/8	2 7/8	3 3/4	3/8	11/32	20	14	2 5/8	2 5/8	3	4 1/2	5	3 7/8	6 1/4	3 3/8	2 7/8	3	2 1/2	1 1/4	1 1/8	2 3/8	3/8	1 3/4	145TC-184C
4MFST	6 1/8	2 5/8	6 1/8	3	4	3/8	13/32	23 1/2	18	3 1/2	2 13/16	3 1/4	5 3/4	5 13/16	4 1/2	8 3/8	3 11/16	3	3 3/4	3	1 3/4	1 3/8	2 11/16	1/2	2 1/4	145TC-184C
5MFST	6 3/4	3	7	3	4	3/8	13/32	23 1/2	18	4	3	4	6	6 1/4	5 1/8	9 5/8	4 1/16	3 3/16	4 1/4	3 1/2	1 3/4	1 3/8	3 1/16	1/2	2 11/16	184TC-215C
6MFST	7 1/2	3 1/2	8	3 1/2	4 3/4	9/16	17/32	29	21	4 1/2	3 3/8	4 3/8	6 1/2	6 11/16	5 1/2	11	4 7/16	3 9/16	4 3/4	4	2 1/8	1 5/8	3 1/2	5/8	2 7/8	184TC-215C
7MFST	9 3/16	4	9	3 1/2	4 3/4	9/16	17/32	29	21	5	3 5/8	5	8	7 9/16	6 3/8	13	4 11/16	3 13/16	5 1/2	4 1/2	2 1/8	1 5/8	3 5/8	5/8	3 5/8	184TC-215C
8MFST	10 5/8	4.6	10.1	3 1/2	4 3/4	9/16	17/32	29	21	5 1/2	4 5/8	6 1/8	9 1/4	8 5/16	7 1/8	14 1/2	5 11/16	4 13/16	6 1/8	5	2 1/8	1 5/8	4 7/16	5/8	4 1/4	184TC-215C
9MFST	11 11/16	5.17	11.17	5	6 1/4	3/4	13/16	31	22	6	4 5/8	5 1/2	9 1/4	8 13/16	8 5/16	14 3/4	5 13/16	4 15/16	6 3/4	5 1/2	2 1/16	1 15/16	4 5/16	11/16	5 3/8	254TC-256TC

For construction purposes send for Certified Dimension Sheets.

MOTOR DIMENSIONS:

H.P. @ 1800 RPM	1/6		1/4		1/3		1/2		3/4		1	1 1/2	2	3	5
Phase	Single *	Three	Single *	Three	Single *	Three	Single *	Three	Single *	Three	Three	Three	Three	Three	Three
AG	7 1/2	7 1/2	7 3/4	8 1/4	8 1/4	8 3/4	8 3/4	8 3/4	9 1/4	9 1/4	9 3/4	10 3/4	10 3/4	12 1/4	13 3/4
AP	5 21/32	5 21/32	5 21/32	5 21/32	6 31/64	6 31/64	6 31/64	6 31/64	6 31/64	6 31/64	6 31/64	6 31/64	6 31/64	10 11/32	10 11/32

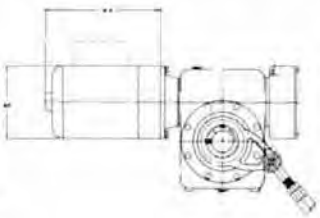

*Single phase motor is capacitor start. Dimensions as shown are for open dripproof enclosure. Motors can be furnished open dripproof or enclosed.

single reduction
hollow shaft — fan cooled — motorized and gearmotor

PARTS LIST:

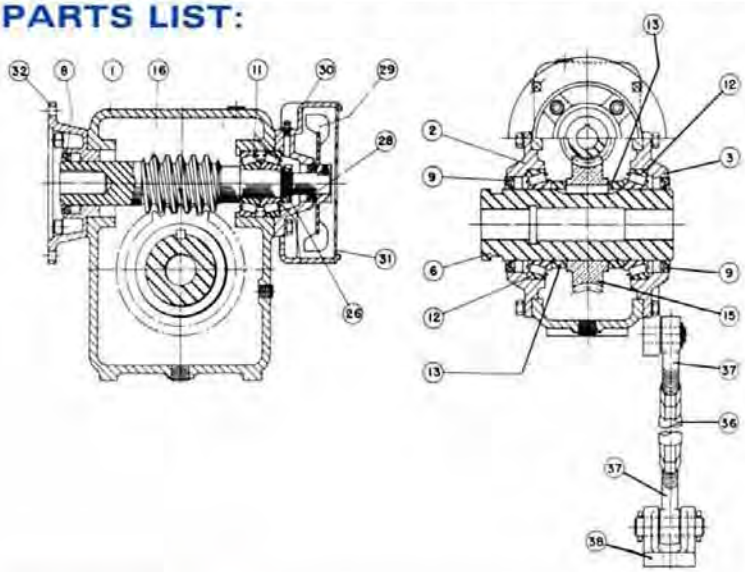

PARTS INDEX

Part No.	Description
1	Housing
2	Slow Speed Cover
3	Slow Speed Cover With Torque Arm Lug
6	Slow Speed Shaft — Hollow
8	Oil Seal — Motor Adapter End
9	Oil Seal — Slow Speed
11	Roller Bearings — High Speed
12	Roller Bearings — Slow Speed
13	Slow Speed Spacer (Not Used on Size 3 or 7 only)
15	Slow Speed Worm Gear — Bronze
16	High Speed Worm Gear and Shaft Integral
26	High Speed Lock Nut
28	Oil Seal — High Speed Fan End
29	Fan
30	Fan Housing and Cap
31	Fan Housing Cover
32	Motor Adapter
32B	Motor Adapter Spacer (Size 4 only)
36	Torque Arm Turnbuckle
37	Torque Arm Rod End — Right Hand & Left Hand
38	Floor Support

2

DIMENSIONS: SLOW SPEED SHAFT BORES (in inches)

3 SF			4 SF			5 SF			6 SF			7 SF			8 SF		
W‡	Keyway	Length	W‡	Keyway	Length	W‡	Keyway	Length	W‡	Keyway	Length	W‡	Keyway	Length	W‡	Keyway	Length
3/4	3/16x3/32	6 1/4	15/16	1/4x1/8	6 11/16	1 3/16	1/4x1/8	7 1/4	1 3/16	1/4x1/8	8	1 5/8	3/8x3/16	8 1/2	1 11/16	3/8x3/16	10 1/2
13/16	3/16x3/32	6 1/4	1	1/4x1/8	6 11/16	1 1/4	1/4x1/8	7 1/4	1 1/4	1/4x1/8	8	1 11/16	3/8x3/16	8 1/2	1 3/4	3/8x3/16	10 1/2
7/8	3/16x3/32	6 1/4	1 1/16	1/4x1/8	6 11/16	1 3/8	5/16x5/32	7 1/4	1 3/8	5/16x5/32	8	1 3/4	3/8x3/16	8 1/2	1 7/8	1/2x1/4	10 1/2
15/16	1/4x1/8	6 1/4	1 1/8	1/4x1/8	6 11/16	1 7/16	3/8x3/16	7 1/4	1 7/16	3/8x3/16	8	1 7/8	1/2x1/4	8 1/2	1 15/16	1/2x1/4	10 1/2
1	1/4x1/8	6 1/4	1 3/16	1/4x1/8	6 11/16	1 1/2	3/8x3/16	7 1/4	1 1/2	3/8x3/16	8	1 15/16	1/2x1/4	8 1/2	2	1/2x1/4	10 1/2
1 1/16	1/4x1/8	6 1/4	1 1/4	1/4x1/8	6 11/16	1 5/8	3/8x3/16	7 1/4	1 5/8	3/8x3/16	8	2	1/2x1/4	8 1/2	2 3/16	1/2x1/4	10 1/2
1 1/8	1/4x1/8	6 1/4	1 3/8	5/16x5/32	6 11/16	1 11/16	3/8x3/16	7 1/4	1 11/16	3/8x3/16	8	2 3/16	1/2x1/4	8 1/2	2 1/4	1/2x1/4	10 1/2
1 3/16	1/4x1/8	6 1/4	1 7/16	3/8x3/16	6 11/16	1 3/4	3/8x3/16	7 1/4	1 3/4	3/8x3/16	8	2 1/4	1/2x1/4	8 1/2	2 7/16	5/8x5/16	10 1/2
1 1/4	1/4x1/8	6 1/4	1 1/2	3/8x3/16	6 11/16	1 7/8	1/2x3/16	7 1/4	1 7/8	1/2x1/4	8	2 7/16	5/8x7/32	8 1/2	2 1/2	5/8x5/16	10 1/2
			1 5/8	3/8x1/8	6 11/16				1 15/16	1/2x1/4	8				2 11/16	5/8x5/16	10 1/2
			1 11/16	3/8x1/8	6 11/16				2	1/2x1/4	8				2 3/4	5/8x5/16	10 1/2
									2 3/16	1/2x1/8	8				2 15/16	3/4x1/4	10 1/2
															3	3/4x1/4	10 1/2

9 SF		
W‡	Keyway	Length
2 3/16	1/2x1/4	10 3/4
2 1/4	1/2x1/4	10 3/4
2 7/16	5/8x5/16	10 3/4
2 1/2	5/8x5/16	10 3/4
2 11/16	5/8x5/16	10 3/4
2 3/4	5/8x5/16	10 3/4
2 15/16	3/4x3/8	10 3/4
3	3/4x3/8	10 3/4
3 3/16	3/4x3/8	10 3/4
3 7/16	7/8x7/16	10 3/4

‡ Bore Tolerances + .000, + .002.

SHAFT ARRANGEMENTS:
(STANDARD MOUNTING POSITIONS EXACTLY AS SHOWN)*

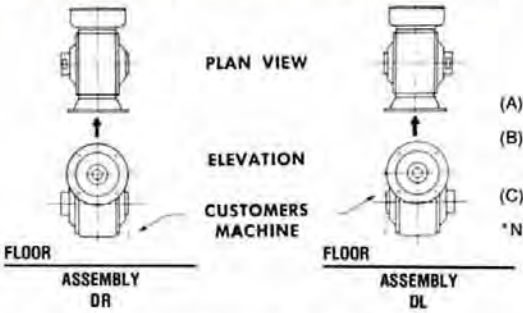

(A) Reducer viewed looking at input shaft.

(B) No extra charge for these assemblies provided shaft extensions are standard.

(C) The input shaft may be driven in either direction.

*NOTE: Standard mounting position is exactly as shown. If motor is to be oriented in any other position, so state on order.

For improved availability, specify bore sizes shown in bold type (super standards) whenever possible. Some bore sizes may require a premium. See price list for details.

WINSMITH

single reduction—drop bearing

SERIES: L

GEAR RATIOS AVAILABLE 5:1 THRU 60:1
COMPLETE TORQUE AND HP RATINGS ..... PAGES 122-150
OVERHUNG LOAD RATINGS ..... PAGES 123-223
SERVICE FACTORS ..... PAGE 230
COUPLING ADAPTERS ..... PAGE 120
HYDRAULIC MOTOR ADAPTERS ..... PAGE 116

TABLE OF WEIGHTS

Unit	4	5	6	7	8	9	10	12
Net Weight	49	71	101	136	181	238	318	489

Alloy steel slow speed shafts

DIMENSIONS:

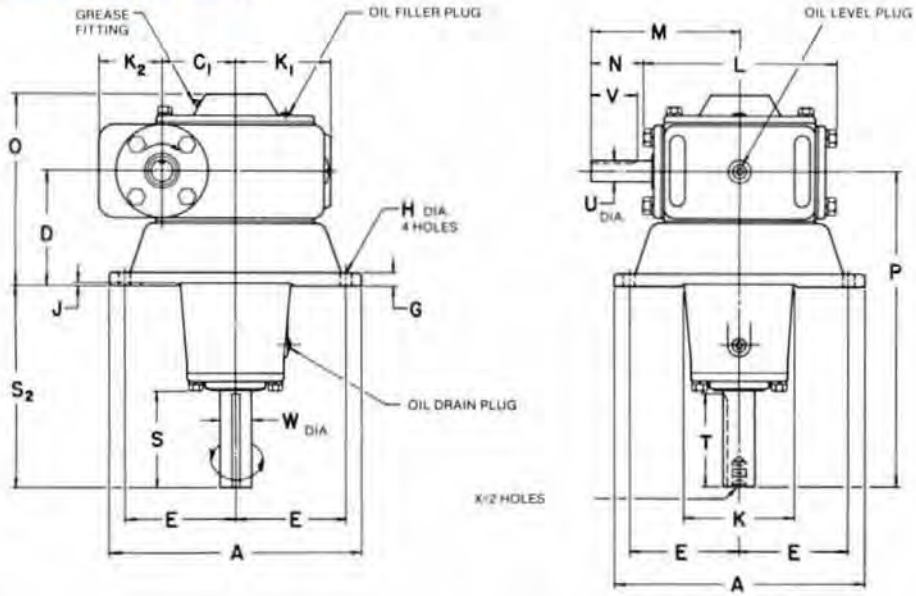

X DIMENSIONS

Unit	Tap	Depth	Bolt Circle
4L	1/4" x 20"	3/4"	5/8"
5L	5/16"x18"	1"	3/4"
6L	5/16" x 18"	1"	3/4"
7L	3/8"x16"	1"	1"
8L	3/8" x 16"	1"	1 1/8"
9L	3/8"x16"	1"	1 1/2"
10L	3/8" x 16"	1"	1 1/2"
12L	3/8" x 16"	1"	2"

SPEED REDUCER DIMENSIONS (in inches) Refer to D Line for these sizes.

Unit	A	C_1	D	E	G	H	J	K	K_1	K_2	L	M	O	P	High Speed Shaft U*	N	V	Keyway	Slow Speed Shaft W*	S	S_2	T	Keyway
4L	9	2 5/8	4	4	1/2	13/32	1/8	4 3/8	3 1/2	2 1/4	7 7/8	6	6 11/16	11 1/2	3/4	2 1/16	2	3/16x3/32	1	3 11/16	7 1/2	3 1/2	1/4x1/8
5L	9 3/4	3	5 3/8	4 1/8	5/8	5/16	1/8	5 1/4	4	2 5/8	8 3/8	6 1/2	8 3/8	14 7/8	7/8	2 5/16	2 1/4	3/16x3/32	1 7/16	4 11/16	9 1/2	4 3/16	3/8x3/16
6L	12	3 1/2	5 3/8	5 1/4	5/8	5/16	1/8	5 1/4	4 1/2	3	9 1/4	7 1/16	9	14 7/8	1	2 7/16	2 1/2	1/4x1/8	1 5/8	4 11/16	9 1/2	4 3/16	3/8x3/16
7L	12 1/2	4	6	5 3/8	3/4	11/16	1/8	5 3/4	5	4	11	8	9 5/8	16 1/2	1	2 1/2	2 1/2	1/4x1/8	1 3/4	5 3/4	10 1/2	5 1/4	3/8x3/16
8L	15 3/4	4.6	6	7	7/8	13/16	1/8	6 3/8	5 1/2	4.4	12 1/2	9	10 5/8	16 1/2	1 1/8	2 3/4	2 3/4	1/4x1/8	1 3/4	5 3/4	10 1/2	5 1/2	3/8x3/16
9L	16 1/2	5.167	7	7 1/4	1	15/16	3/16	7 3/4	6	3.6	13 1/2	9 1/2	11 3/8	19 1/2	1 1/8	2 3/4	2 3/4	1/4x1/8	2 3/16	5 3/4	12 1/2	5 1/2	1/2x1/4
10L	19	6	7	8 1/2	1	15/16	3/16	8 3/4	7	5 1/2	15 5/8	10 1/4	12 1/8	22 1/2	1 1/4	2 11/16	2 3/4	1/4x1/8	2 7/16	7 11/16	15 1/2	7 1/2	5/8x3/16
12L	21 1/2	7	8	9 1/2	1 1/4	1 1/8	1/4	9 3/4	8 1/2	6	18 1/2	12 3/8	14 1/16	23 1/2	1 1/2	3 1/4	3 1/4	3/8x3/16	2 15/16	7 5/8	15 1/2	7 1/2	3/4x3/8

*Shaft diameter tolerance +.000 —.001. For construction purposes send for Certified Dimension Sheets.

PARTS LIST:

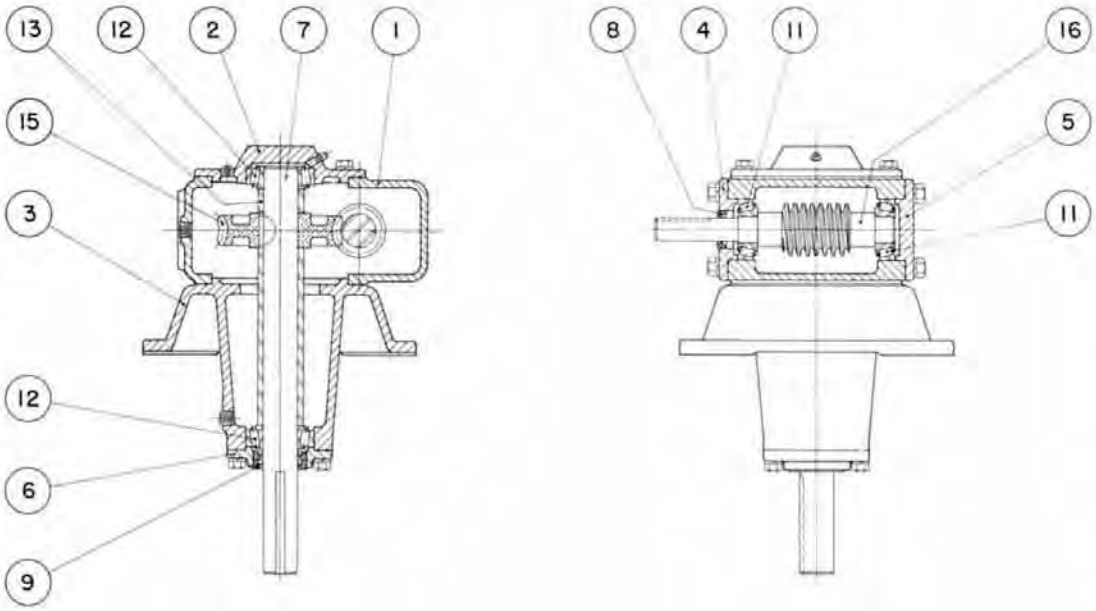

PARTS INDEX

Part No.	Description	Part No.	Description
1	Housing	*11	Roller Bearing — High Speed
2	Slow Speed Cover	12	Roller Bearing — Slow Speed
3	Slow Speed Cover and Base	13	Slow Speed Spacer — Short
4	High Speed Cover — Open	15	Slow Speed Worm Gear — Bronze
5	High Speed Cover — Closed	16	High Speed Worm and Shaft Integral
5A	High Speed Adapter — Not Shown — Use with H.S. Cover — Closed Units 10 thru 12 incl.	26	High Speed Lock Nut — Not Shown — Use on Units 10 thru 12 incl.
6	Slow Speed Cap		
7	Slow Speed Shaft		
8	Oil Seal — High Speed		
9	Oil Seal — Slow Speed		

* Series 4 thru 9 Uses 2 Single Row Bearings. Series 10 and 12 Uses 1 Single and 1 Double Row Bearings.

SHAFT ARRANGEMENTS:

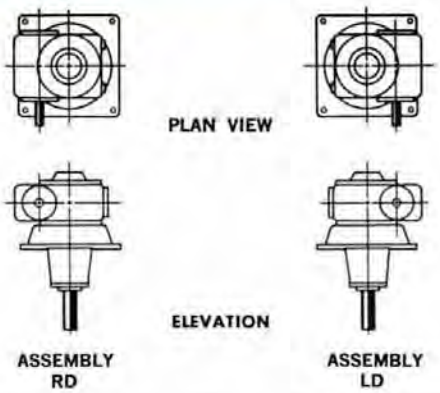

(A) Reducer viewed looking at the high speed shaft.

(B) No extra charge for these assemblies provided the shaft extensions are of standard length.

(C) The input shaft may be driven in either direction.

(D) Units may be mounted in any position, (ceiling, sidewall, etc.(if specified when ordered.)

WINSMITH

single reduction—drop bearing—motorized and gearmotor

SERIES: ML-MLW (WITH MOTOR)

GEAR RATIOS AVAILABLE 5:1 THRU 60:1

COMPLETE TORQUE AND HP RATINGS ..... PAGES 122-150
OVERHUNG LOAD RATINGS ..... PAGES 123-223
SERVICE FACTORS ..... PAGE 230
COUPLING ADAPTERS ..... PAGE 120
HYDRAULIC MOTOR ADAPTERS ..... PAGE 116

LMW
See page 120.

TABLE OF WEIGHTS

Unit	4	5	6	7	8
Net Weight	51	73	104	139	185

Weights are without motor.
Alloy steel slow speed shafts available.
Hydraulic Motor Flanges available, see pages 116-118.
Units 4 through 10 & 12 available in "C" flange coupling type, see page 120.

DIMENSIONS: Dimensions apply to speed reducer only. For motor dimension see next page.

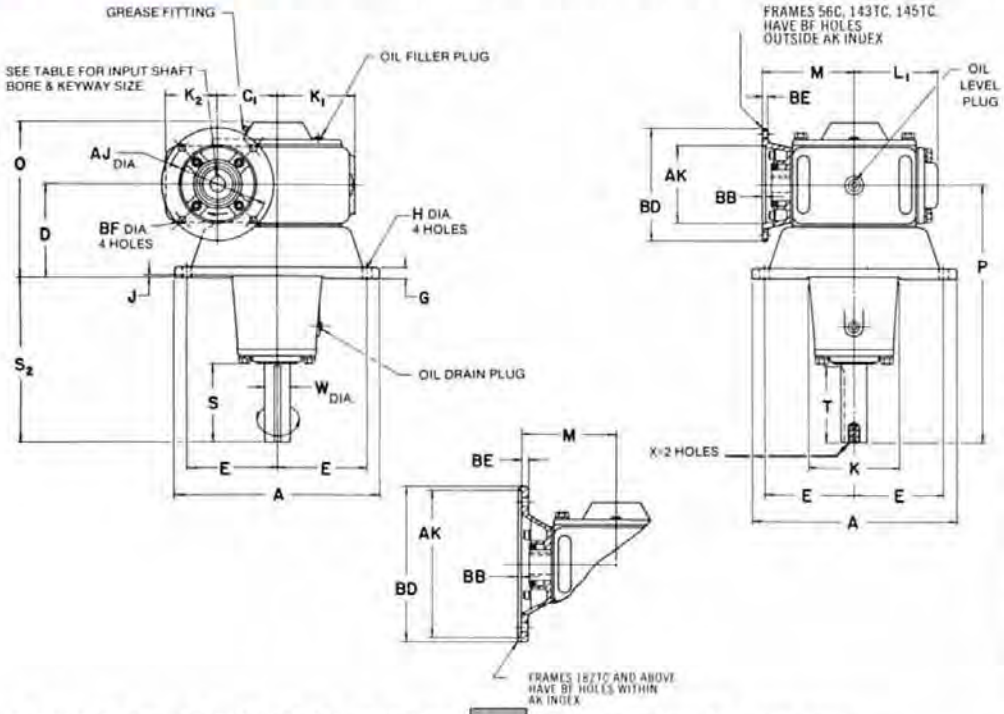

X DIMENSIONS

Unit	Tap	Depth	Bolt Circle
4ML	1/4" x 20"	3/4"	5/8"
5ML	3/16- 18	1	3/4
6ML	3/16" x 18"	1"	3/4"
7ML	3/8- 16	1	1
8ML	3/8" x 16"	1"	1 1/8"

FRAME, KEYWAY and BORE DIMENSIONS

Frame No.	56C	143TC 145TC	182TC 184TC 213TC 215TC
AJ	5 7/8	5 7/8	7 1/4
AK	4 1/2	4 1/2	8 1/2
BB	3/16	3/16	3/16
BD	6 1/2	6 1/2	9
BE	5/16	5/16	3/8
BF	13/32	13/32	17/32
Keyway	3/16 x 3/32	3/16 x 3/32	1/4 x 1/8
Bore +.001 −.000	.6255	.8755	1.1255 *

SPEED REDUCER DIMENSIONS (in inches) Refer to D Line for these sizes.

Unit	A	C_1	D	E	G	H	J	K	K_1	K_2	L_1	M	O	P	Slow Speed Shaft W*	S	S_2	T	Keyway	Maximum Frame Size
4ML	9	2 5/8	4	4	1/2	11/32	1/8	4 3/8	3 1/2	2 1/4	4 1/4	4 1/2	6 11/16	11 1/2	1	3 11/16	7 1/2	3 1/2	1/4 x 1/8	145TC - 184C
5ML	9 3/4	3	5 3/8	4 1/8	3/8	3/16	1/8	5 1/4	4	2 5/8	4 1/2	5 1/8	8 3/8	14 7/8	1 7/16	4 11/16	9 1/2	4 9/16	3/8 x 3/16	184TC - 215C
6ML	12	3 1/2	5 3/8	5 1/4	3/8	3/16	1/8	5 1/4	4 1/2	3	5	5 1/2	9	14 7/8	1 5/8	4 11/16	9 1/2	4 9/16	3/8 x 3/16	184TC - 215C
7ML	12 1/2	4	6	5 3/8	3/4	11/16	1/8	5 3/4	5	4	5 7/8	6 3/8	9 5/8	16 1/2	1 3/4	5 3/4	10 1/2	5 1/4	3/8 x 3/16	184TC - 215C
8ML	15 3/4	4.6	6	7	7/8	13/16	1/8	6 3/8	5 1/2	4.4	6 5/8	7 1/8	10 5/8	16 1/2	1 3/4	5 3/4	10 1/2	5 1/2	3/8 x 3/16	184TC - 215C
9ML	16 1/2	5.17	7	7 1/4	1	15/16	3/16	7 3/4	6	4 19/32	6 3/4	8 9/16	11 5/8	19 1/2	2 3/16	5 3/4	12 1/2	5 1/2	1/2 x 1/4	254TC - 256TC

***Slow speed shaft diameter tolerance +.000 −.001. For construction purposes send for Certified Dimension Sheets.**

single reduction
drop bearing—motorized and gearmotor

MOTOR DIMENSIONS:

H.P. @ 1800 RPM	1/6		1/4		1/3		1/2		3/4		1	1½	2	3	5
Phase	Single *	Three	Single *	Three	Single *	Three	Single *	Three	Single *	Three	Three	Three	Three	Three	Three
AG	7½	7½	7¾	8¼	8¼	8¾	8¾	8¾	9¼	9¼	9¾	10¾	10¾	12¼	13¾
AP	5 21/32	5 21/32	5 21/32	5 21/32	6 31/64	6 31/64	6 31/64	6 31/64	6 31/64	6 31/64	6 31/64	6 31/64	6 31/64	10 11/32	10 11/32

*Single phase motor is capacitor start. Dimensions as shown are for open dripproof enclosure. Motors can be furnished open dripproof or enclosed.

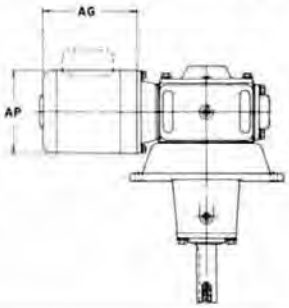

PARTS LIST:

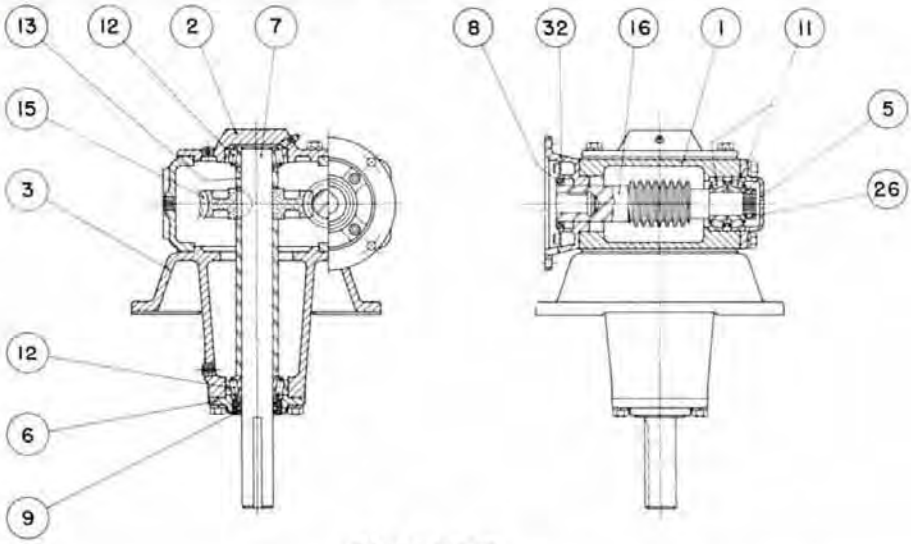

PARTS INDEX

Part No.	Description	Part No.	Description
1	Housing	11	Roller Bearing — High Speed
2	Slow Speed Cover	12	Roller Bearing — Slow Speed
3	Slow Speed Cover and Base	13	Slow Speed Spacer — Short
5	High Speed Cover — Closed	15	Slow Speed Worm Gear — Bronze
6	Slow Speed Cap	16	High Speed Worm and Shaft Integral
7	Slow Speed Shaft	26	High Speed Lock Nut
8	Oil Seal — High Speed	32	Motor Adapter
9	Oil Seal — Slow Speed	32B	Motor Adapter Spacer (Size 4 only)

SHAFT ARRANGEMENTS:

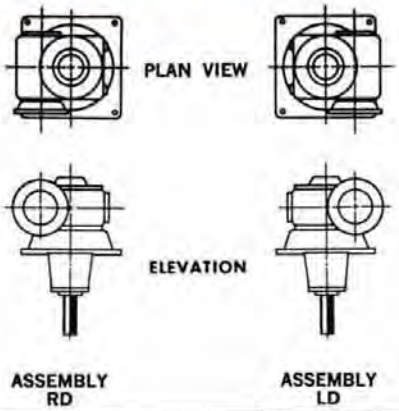

(A) The reducer is viewed looking at the motor end of the high speed shaft.

(B) No extra charge for the above assemblies provided the shaft extensions are of standard length.

(C) The input shaft may be driven in either direction.

(D) Units may be mounted in any position, (ceiling, sidewall, etc.) if specified when ordered.

WINSMITH

INDEX SPECIFICATIONS AND DIMENSIONS

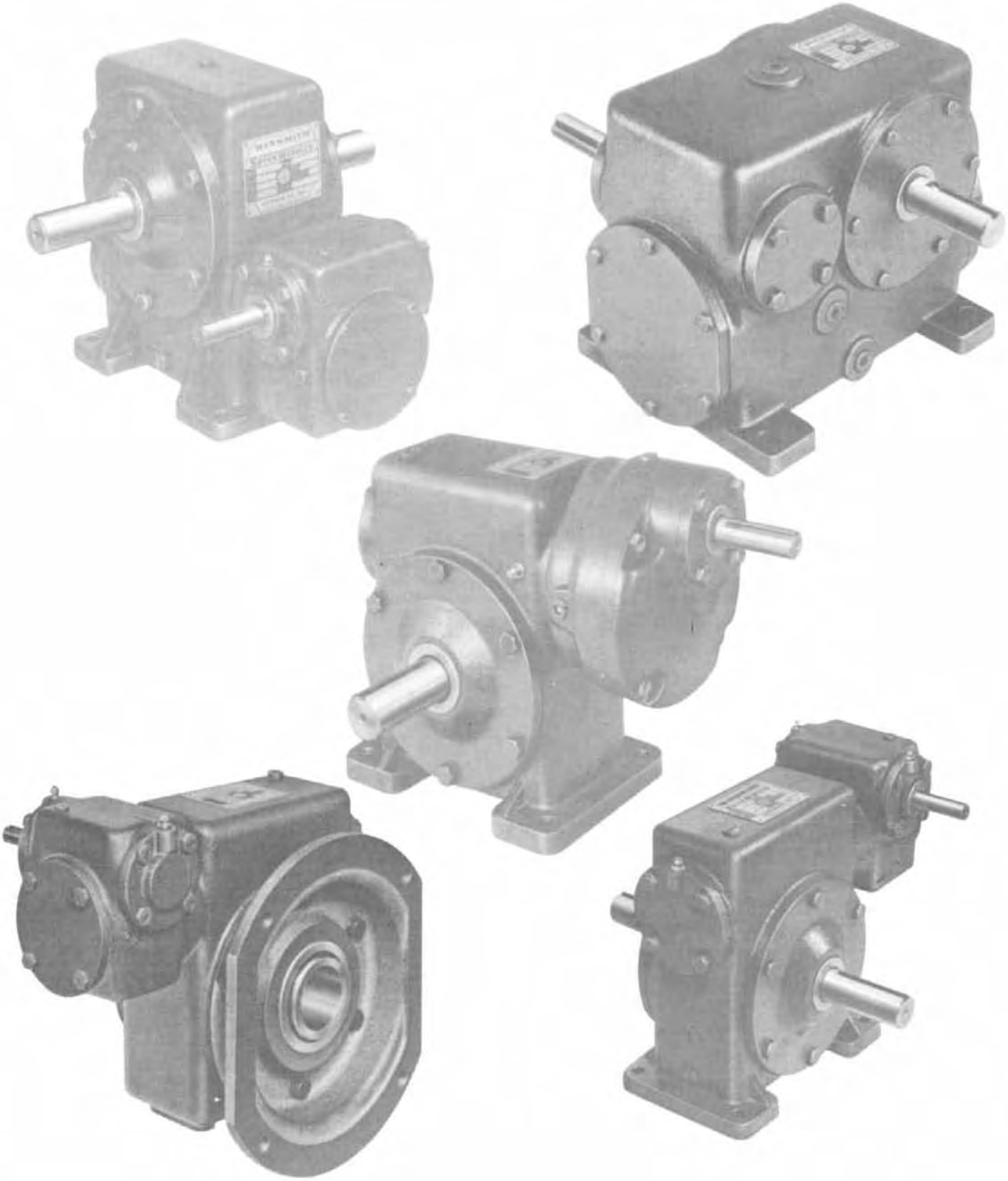

Section 3

Double Reduction Units

Model	Page
CBD	72
CTD	74
CVD	76
MCTD-MCTDW	78
MCVD-MCVDW	80
CBX	82
CTX-SCTX	84
CVX-LX	86
DBI	88
SFD-SFX	90
STD-SCTX	92
MSFD-MSFDW	94
MSTD-MSTDW	96
LD-LX	98
MLD-MLDW	100

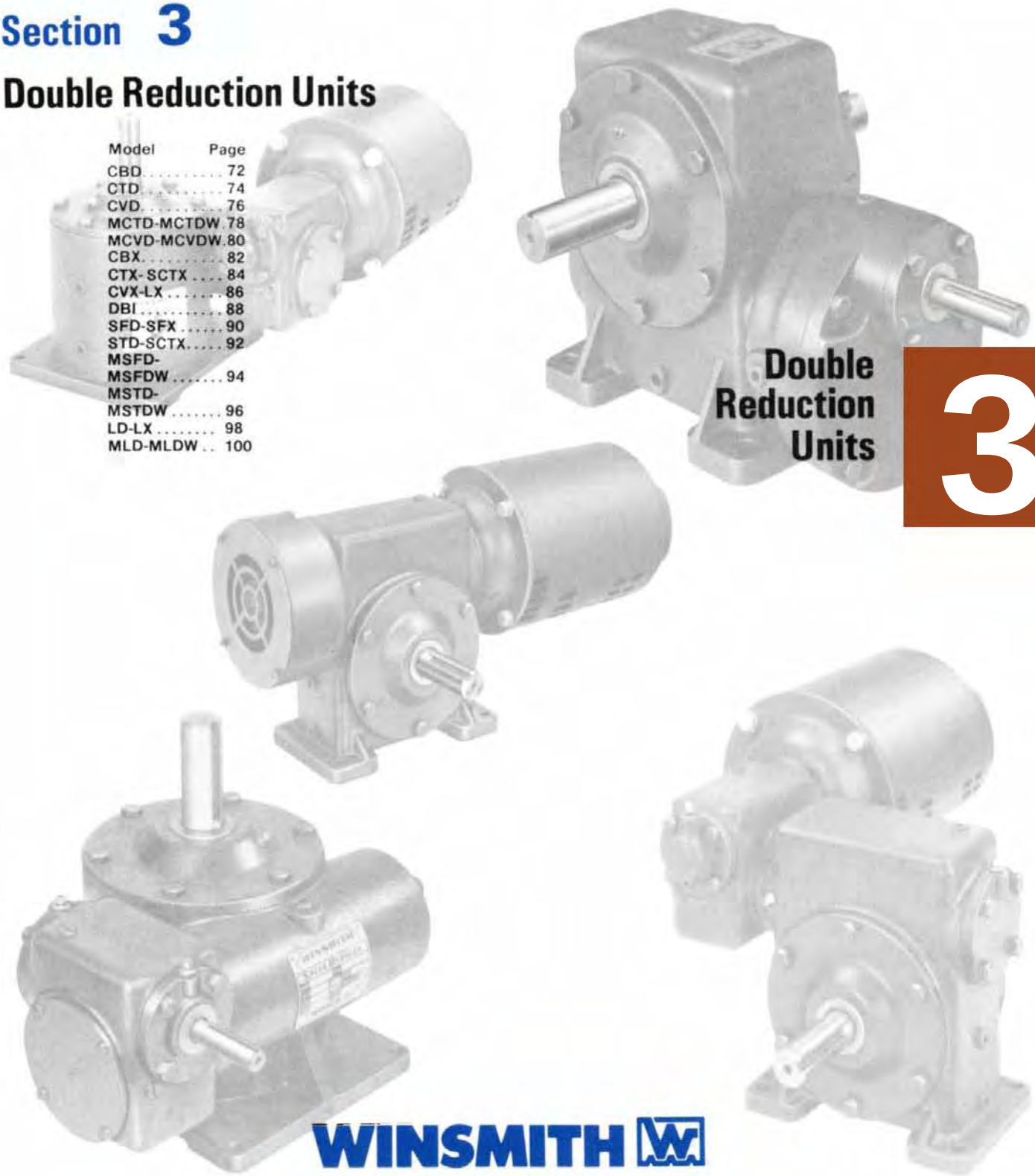

double reduction

SERIES: CBD

GEAR RATIOS AVAILABLE 50:1 THRU 3600:1
COMPLETE TORQUE AND HP RATINGS ..... PAGES 152-222
OVERHUNG LOAD RATINGS .....PAGES 153-223
SERVICE FACTORS ..... PAGE 230
COUPLING ADAPTERS ..... PAGE 120
HYDRAULIC MOTOR ADAPTERS ..... PAGE 116

TABLE OF WEIGHTS

Unit	2	3	4	5	6	7	8	9	10	11	12	13	14	15
Net Weight	25	26	40	60	77	120	157	180	265	300	468	500	681	1235

Units #3, 4, 5, 6, 7, 8, 9, 10, and 12 are available with hollow output shafts, see page 90-92.
Alloy steel slow speed shafts available.

DIMENSIONS:

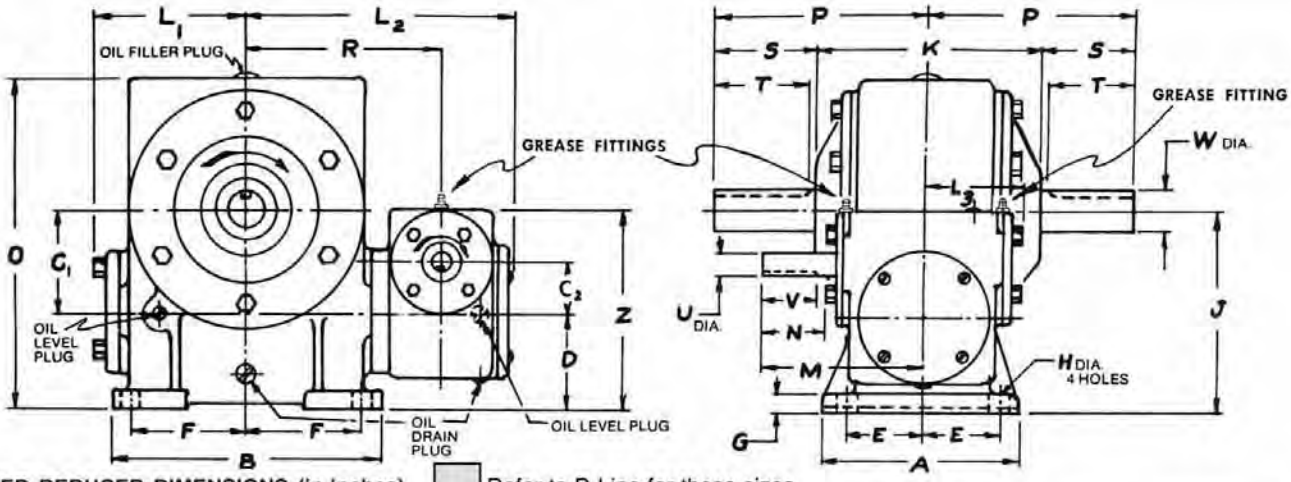

SPEED REDUCER DIMENSIONS (in inches) Refer to D Line for these sizes.

Unit	A	B	C_1	C_2	D	E	F	G	H	J	K	L_1	L_2	L_3	M	O	P	R	Z	High Speed Shaft U*	N	V	Keyway	Slow Speed Shaft W*	S	T	Keyway
2	5⅛	4¼	1¾	1.33	2	2 1/16	1 7/16	½	13/32	3¾	4¾	2⅞	5 5/16	2 7/16	4⅛	6	4½	4	4⅞	½	1 11/16	1½	⅛ x 1/16	¾	2⅛	2	3/16 x 3/32
3	5⅛	4 5/16	2	1.33	2	2 1/16	1 7/16	½	13/32	4	4¾	2⅞	5 13/16	2 7/16	4⅛	6¼	4¾	4	4⅞	½	1 11/16	1½	⅛ x 1/16	⅞	2⅛	2¼	3/16 x 3/32
4	5	7	2⅝	1.33	2½	2	3	½	13/32	5⅛	5⅝	3 15/16	6 15/16	2 7/16	4⅛	8⅜	5⅜	5	5⅜	½	1 11/16	1½	⅛ x 1/16	1	2 11/16	2½	¼ x ⅛
5	6	8¼	3	2	3	2⅜	3½	⅝	9/16	6	6	4 5/16	7 15/16	2⅞	4¾	9⅜	5⅞	5¾	6 11/16	⅞	1⅛	1¾	3/16 x 3/32	1¼	2⅞	2¾	¼ x ⅛
6	6¼	9¼	3½	2	3⅛	2⅝	4⅛	⅝	¾	6⅛	7¼	4⅛	8 1/16	2¾	4¾	11	7	6¼	6 13/16	⅞	1⅞	1¾	3/16 x 3/32	1½	3⅛	3¼	⅜ x 3/16
7	7	11	4	2⅝	3½	2⅞	4⅞	⅝	¾	7½	7⅞	5½	9 11/16	3 15/16	6	13	7½	7¼	8 9/16	⅞	2 1/16	2	3/16 x 3/32	1¾	3⅞	3¾	⅜ x 3/16
8	8	12½	4.60	2⅛	3¼	3¼	5½	¾	11/16	8.350	9¼	6¼	10 11/16	3 15/16	6	14½	8½	8¼	8 13/16	⅞	2 1/16	2	3/16 x 1/32	1¾	3⅞	3¾	⅜ x 3/16
9	8½	13½	5.167	2⅛	3¼	3½	6	¾	11/16	8.917	9¼	6¾	11 3/16	3 15/16	6	16	9	8½	8 13/16	⅞	2 1/16	2	3/16 x 1/32	2	4⅛	4¼	½ x ¼
10	10	15	6	3	4½	4	6½	¾	13/16	10½	10¼	8 1/16	12 5/16	4 3/16	6½	18½	9¾	9½	10¼	⅞	2 5/16	2¼	3/16 x 1/32	2¼	4⅝	4½	½ x ¼
11	10	16	6½	3	5	4	7	¾	13/16	11½	10¾	8 1/16	12 5/16	4 3/16	6½	20	10½	9¾	10¼	⅞	2 5/16	2¼	3/16 x 1/32	2½	5⅛	5	⅝ x 5/16
12	12⅛	18	7	3½	6	5	7½	1	1 1/16	13	12¼	9½	14 5/16	4⅝	7 1/16	21½	11⅜	11½	12 11/16	1	2 7/16	2½	¼ x ⅛	2¼	5⅝	5½	⅝ x 5/16
13	14½	19	7⅝	3½	6½	5¼	8	1	1 1/16	14⅛	14¾	10¼	15 5/16	4⅝	7 1/16	23	13½	12¼	13 5/16	1	2 7/16	2½	¼ x ⅛	3	6⅛	6	¾ x ⅜
14	16½	21	8⅛	4	7	6¼	9	1¼	1 5/16	15⅛	16¾	11¾	16⅛	5½	8	25	15	13	14 1/16	1	2½	2½	¼ x ⅛	3¼	6⅝	6½	¾ x ⅜
15	19	23	9	5.167	8 1/16	7½	8¼	1¼	1 5/16	17 7/16	18	13⅛	19¾	6¾	9½	29 13/16	16¼	16	17 7/16	1⅛	2¾	2¾	¼ x ⅛	3¾	7¼	7	⅞ x 7/16

***Shaft diameter tolerances +.000-.001. For construction purposes send for Certified Dimension Sheets.**

PARTS LIST:

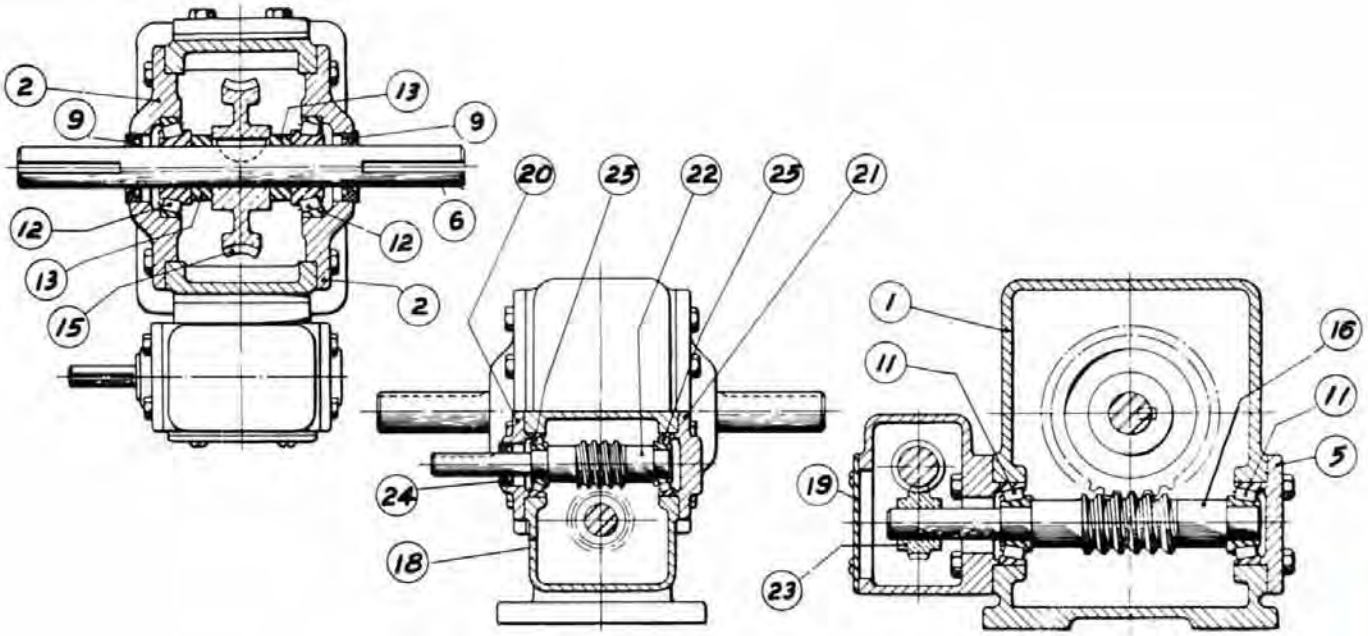

PARTS INDEX

Part No.	Description	Part. No.	Description
1	Housing	18	High Speed Attachment Housing
2	Slow Speed Cover — Open	19	High Speed Attachment Housing Cover
3	Slow Speed Cover Closed — Not Shown	20	High Speed Cover — Open
5	Intermediate Cover Closed	21	High Speed Cover — Closed
5A	Intermediate Adapter — Not Shown Used With Inter. Cover Closed Units 10 Thru 15 Incl.	22	High Speed Worm and Shaft — Integral
6	Slow Speed Shaft — Double Extension	23	High Speed Worm Gear — Bronze
7	Slow Speed Shaft — Single Extension — Not Shown	24	Oil Seal — High Speed
9	Oil Seal — Slow Speed	25	Roller Bearing — High Speed
*11	Roller Bearing — Intermediate Speed	26	Intermediate Lock Nut — Not Shown Used On Units 10 Thru 15 Incl.
12	Roller Bearing — Slow Speed		
13	Slow Speed Spacer		
15	Slow Speed Worm Gear — Bronze		
16	Intermediate Speed Worm and Shaft Integral		

* Series 2 Thru 9 Uses 2 Single Row Bearings. Series 10 Thru15 Uses 1 Single and 1 Two Row Bearing.

SHAFT ARRANGEMENTS:

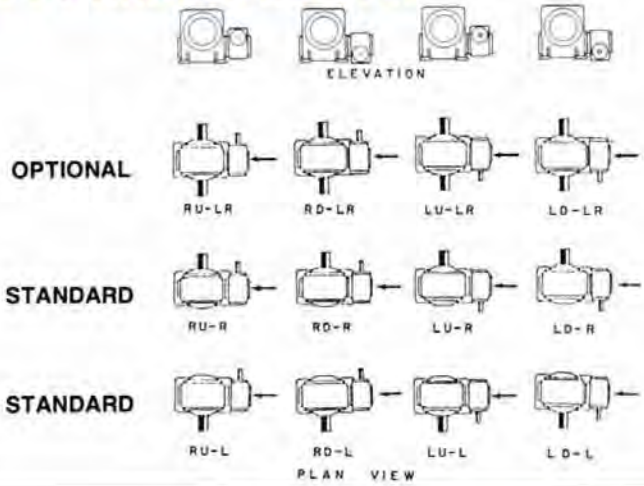

(A) The Reducer is viewed looking at the attachment housing.

(B) No extra charge for standard assemblies provided the shaft extensions are of standard length.

(C) The input shaft may be driven in either direction.

(D) Units may be mounted in any position, (ceiling, sidewall, etc.), if specified when ordered.

WINSMITH

double reduction

SERIES: CTD

GEAR RATIOS AVAILABLE 50:1 THRU 3600:1
COMPLETE TORQUE AND HP RATINGS ..... PAGES 152-222
OVERHUNG LOAD RATINGS ..... PAGES 153-223
SERVICE FACTORS ..... PAGE 230
COUPLING ADAPTERS ..... PAGE 120
HYDRAULIC MOTOR ADAPTERS ..... PAGE 116

TABLE OF WEIGHTS

Unit	2	3	4	5	6	7	8	9	10	11	12	13	14	15
Net Weight	25	26	40	65	76	142	156	173	267	310	468	495	679	1235

Units #3, 4, 5, 6, 7, 8, 9, 10, and 12 are available with hollow output shafts. see page 90-92. Alloy steel slow speed shafts available

DIMENSIONS:

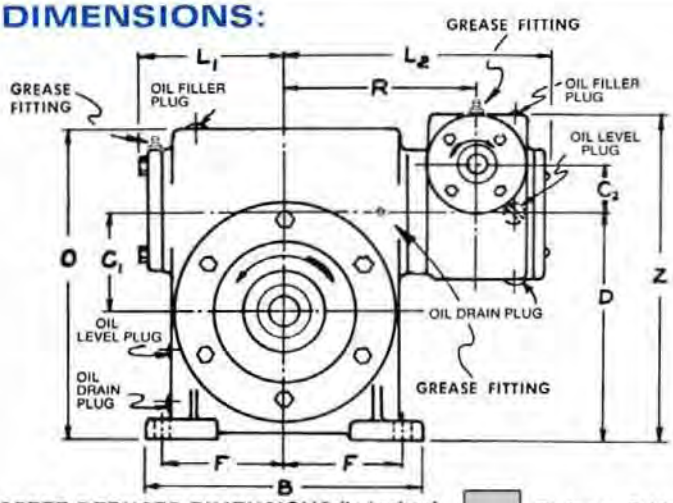

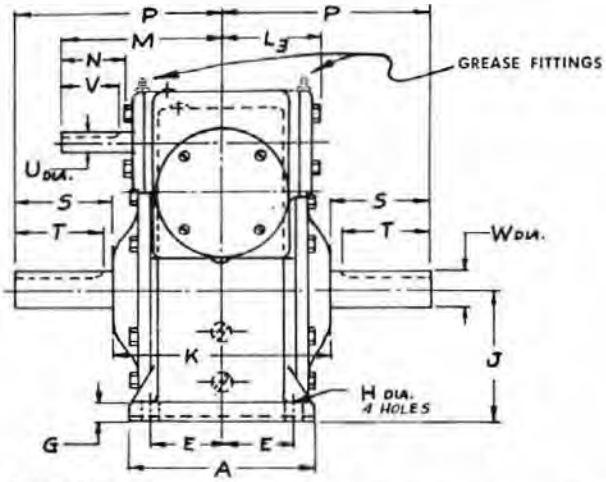

SPEED REDUCER DIMENSIONS (in inches) Refer to D Line for these sizes.

Unit	A	B	C_1	C_2	D	E	F	G	H	J	K	L_1	L_2	L_3	M	O	P	R	Z	High Speed Shaft U*	N	V	Keyway	Slow Speed Shaft W*	S	T	Keyway
2	4 3/8	5 1/2	1 3/4	1.33	4 3/16	1 3/4	2 5/16	1/2	13/32	2 7/16	4 3/4	2 7/8	5 15/16	2 7/16	4 1/8	6	4 1/2	4	7 1/16	1/2	1 11/16	1 1/2	1/8 × 1/16	3/4	2 1/8	2	3/16 × 3/32
3	4 3/4	6	2	1.33	4 5/8	1 7/8	2 1/2	1/2	13/32	2 5/8	4 3/4	2 7/8	5 15/16	2 7/16	4 1/8	6 1/4	4 3/4	4	7 1/2	1/2	1 11/16	1 1/2	1/8 × 1/16	7/8	2 3/8	2 1/4	3/16 × 3/32
4	4 3/4	7 1/2	2 5/8	1.33	6 1/8	1 7/8	3 1/4	1/2	13/32	3 1/2	5 3/8	3 15/16	6 15/16	2 7/16	4 1/8	8 3/8	5 3/8	5	9	1/2	1 11/16	1 1/2	1/8 × 1/16	1	2 11/16	2 1/2	1/4 × 1/8
5	6	8 1/4	3	2	7	2 3/8	3 1/2	5/8	9/16	4	6	4 3/16	7 15/16	2 7/8	4 3/4	9 3/8	5 7/8	5 3/4	10 11/16	5/8	1 7/8	1 3/4	3/16 × 3/32	1 1/4	2 7/8	2 3/4	1/4 × 1/8
6	6 1/4	9 1/4	3 1/2	2	8	2 5/8	4 1/8	5/8	9/16	4 1/2	7 1/4	4 5/8	8 7/16	2 7/8	4 3/4	11	7	6 1/4	11 11/16	5/8	1 7/8	1 3/4	3/16 × 3/32	1 1/2	3 3/8	3 1/4	3/8 × 3/16
7	7	11	4	2 5/8	9	2 7/8	4 7/8	5/8	9/16	5	7 1/4	5 1/2	9 11/16	3 15/16	6	13	7 1/2	7 1/4	14 1/16	3/4	2 1/16	2	3/16 × 3/32	1 3/4	3 7/8	3 3/4	3/8 × 3/16
8	8	12 1/2	4.60	2 5/8	10.100	3 1/4	5 1/2	3/4	11/16	5 1/2	9 1/4	6 1/4	10 11/16	3 15/16	6	14 1/2	8 1/2	8 1/4	15 3/16	3/4	2 1/16	2	3/16 × 3/32	1 3/4	3 7/8	3 3/4	3/8 × 3/16
9	8 1/2	13 1/2	5.167	2 5/8	11.167	3 1/2	6	3/4	11/16	6	9 1/4	6 3/4	11 3/16	3 15/16	6	16	9	8 3/4	16 1/4	3/4	2 1/16	2	3/16 × 3/32	2	4 3/8	4 1/4	1/2 × 1/4
10	10	15	6	3	13	4	6 1/2	3/4	13/16	7	10 1/4	8 1/16	12 5/16	4 3/16	6 1/2	18 1/2	9 3/4	9 1/2	18 3/4	7/8	2 5/16	2 1/4	3/16 × 3/32	2 1/4	4 5/8	4 1/2	1/2 × 1/4
11	10	16	6 1/2	3	14	4	7	3/4	13/16	7 1/2	10 3/4	8 5/16	12 9/16	4 3/16	6 1/2	20	10 1/2	9 3/4	19 3/4	7/8	2 5/16	2 1/4	3/16 × 3/32	2 1/2	5 1/8	5	5/8 × 5/16
12	12 1/2	18	7	3 1/2	15 1/2	5	7 1/2	1	1 1/16	8 1/2	12 1/4	9 1/2	14 9/16	4 5/8	7 1/16	21 1/2	11 3/4	11 1/2	22 3/16	1	2 7/16	2 1/2	1/4 × 1/8	2 3/4	5 5/8	5 1/2	5/8 × 5/16
13	14 1/2	19	7 5/8	3 1/2	17	5 3/4	8	1	1 1/16	9 3/8	14 3/4	10 1/4	15 5/16	4 5/8	7 1/16	23	13 1/2	12 1/4	23 11/16	1	2 7/16	2 1/2	1/4 × 1/8	3	6 1/8	6	3/4 × 3/8
14	16 1/2	21	8 1/8	4	18 1/8	6 3/4	9	1 1/4	1 5/16	10	16 3/4	11 3/4	16 1/8	5 1/2	8	25	15	13	25 7/16	1	2 1/2	2 1/2	1/4 × 1/8	3 1/4	6 5/8	6 1/2	3/4 × 3/8
15	19	23	9	5.167	22	7 1/2	8 1/4	1 3/4	1 5/16	13	18	13 5/8	19 3/4	6 3/4	9 1/2	29 13/16	16 1/4	16	30 3/4	1 1/8	2 3/4	2 3/4	1/4 × 1/8	3 3/4	7 1/4	7	7/8 × 7/16

*Shaft diameter tolerances +.000 −.001. For construction purposes send for Certified Dimension Sheets.

PARTS LIST:

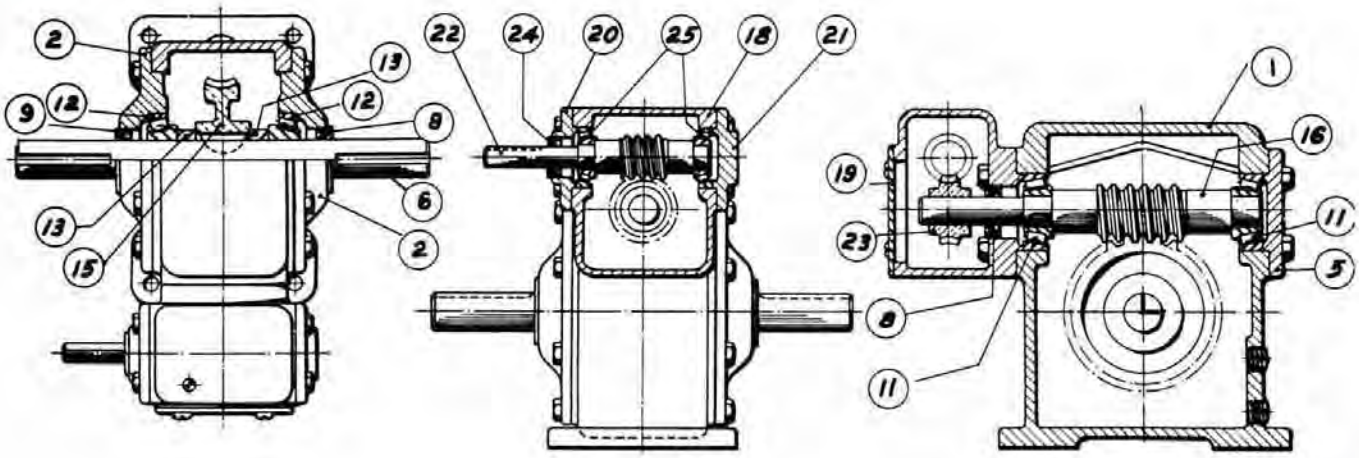

PARTS INDEX

Part No.	Description
1	Housing
2	Slow Speed Cover — Open
3	Slow Speed Cover — Closed — Not Shown
5	Intermediate Cover — Closed
5A	Intermediate Adapter — Not Shown Used With Inter. Cover — Closed — Units 10 Thru 15 Incl.
6	Slow Speed Shaft — Double Extension
7	Slow Speed Shaft — Single Extension — Not Shown
8	Oil Seal — Intermediate Speed
9	Oil Seal — Slow Speed
*11	Roller Bearing — Intermediate Speed
12	Roller Bearing — Slow Speed
13	Slow Speed Spacer
15	Slow Speed Worm Gear — Bronze
16	Intermediate Speed Worm and Shaft Integral
18	High Speed Attachment Housing
19	High Speed Attachment Housing Cover
20	High Speed Cover — Open
21	High Speed Cover — Closed
22	High Speed Worm and Shaft Integral
23	High Speed Worm Gear — Bronze
24	Oil Seal — High Speed
25	Roller Bearing — High Speed
26	Intermediate Lock Nut — Not Shown Used On Units 10 Thru 15 Incl.

* Series 2 thru 9 Uses 2 Single Row Bearings. Series 10 thru 15 Uses 1 Single and 1 Two Row Bearing.

SHAFT ARRANGEMENTS:

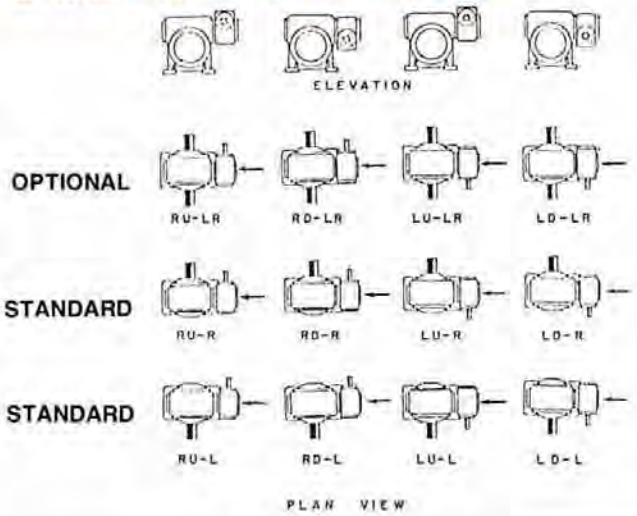

(A) The Reducer is viewed looking at the attachment housing.

(B) No extra charge for standard assemblies provided the shaft extensions are of standard length.

(C) The input shaft may be driven in either direction.

(D) Units may be mounted in any position, (ceiling, sidewall, etc.), if specified when ordered.

WINSMITH

double reduction

SERIES: CVD

GEAR RATIOS AVAILABLE 50:1 THRU 3600:1
COMPLETE TORQUE AND HP RATINGS ..... PAGES 152-222
OVERHUNG LOAD RATINGS ..... PAGES 153-223
SERVICE FACTORS ..... PAGE 230
COUPLING ADAPTERS ..... PAGE 120
HYDRAULIC MOTOR ADAPTERS ..... PAGE 116

TABLE OF WEIGHTS

Unit	2	3	4	5	6	7	8	9	10	11	12	13	14	15
Net Weight	25	27	43	63	80	116	148	200	305	392	498	680	920	1230

Alloy steel slow speed shafts available.

DIMENSIONS:

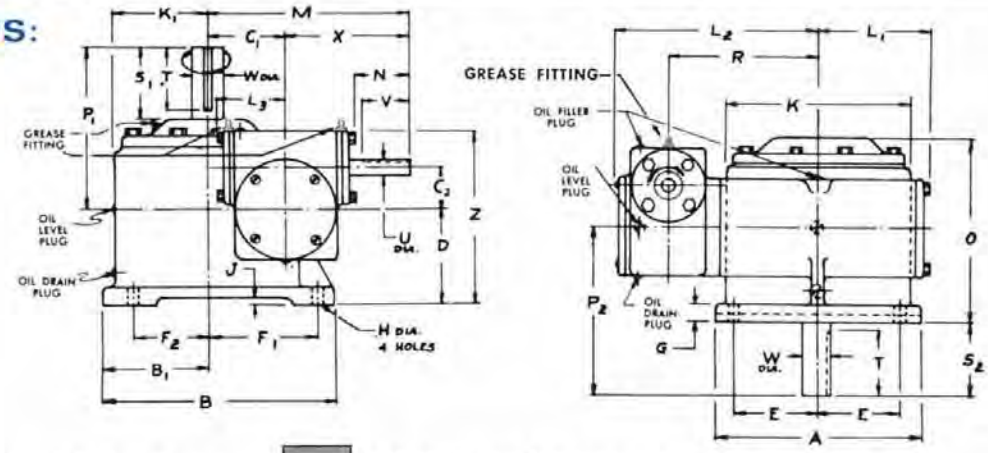

Refer to D Line for these sizes.

SPEED REDUCER DIMENSIONS (in inches)

Unit	A	B	B_1	C_1	C_2	D	E	F_1	F_2	G	H	J	K	K_1	L_1	L_2	L_3	M	O	P_1	P_2	R	X	Z	High Speed Shaft U*	N	V	Keyway	Slow Speed Shaft W*	S_1	S_2	T	Keyway
2	4¾	5¾	2½	1¾	1.33	2 13/16	2	2⅞	2⅛	½	13/32	⅛	4 9/16	2 9/16	2⅞	5 15/16	2 7/16	5⅞	5 5/16	4½	4 13/16	4	4⅛	5½	½	1 11/16	1½	⅛x1/16	¾	2⅛	2	2	3/16x3/32
3	4⅜	6	2½	2	1.33	3¼	2	3⅛	2⅛	½	13/32	⅛	4 5/16	2 9/16	2⅞	5 15/16	2 7/16	6⅛	5⅝	4¾	5½	4	4⅛	6⅛	½	1 11/16	1½	⅛x1/16	⅞	2⅜	2¼	2¼	3/16x3/32
4	8¾	7½	3¼	2⅝	1.33	3⅝	2⅞	3⅞	2⅞	½	13/32	3/16	5⅞	2 15/16	3 15/16	6 15/16	2 7/16	6¾	6 5/16	5⅜	6⅛	5	4⅛	6½	½	1 11/16	1½	⅛x1/16	1	2 11/16	2½	2½	¼x⅛
5	7⅛	8⅜	3¾	3	2	3¾	3⅛	4½	3⅛	⅝	5/16	¼	6¾	3⅝	4 3/16	7 15/16	2⅞	7¾	6¾	5⅞	6½	5¾	4¾	7 1/16	⅝	1⅞	1¾	3/16x3/32	1⅛	2⅞	2⅝	2¾	¼x⅛
6	8	10	4¼	3½	2	4	3½	5¼	3¾	⅝	5/16	3/16	7½	3¾	4⅝	8 7/16	2⅞	8¼	7⅝	7	7¼	6¼	4¾	7 11/16	⅝	1⅞	1¾	3/16x3/32	1½	3⅜	3¼	3¼	3/16x3/16
7	9½	10⅞	4¾	4	2⅝	4½	4⅛	5½	4⅛	⅝	5/16	0	8 9/16	4 5/16	5½	9 11/16	3 15/16	10	8⅛	7½	8¼	7¼	6	9 9/16	¾	2 1/16	2	3/16x3/32	1¾	3⅞	3¾	3¾	3/16x3/16
8	11½	12½	5¾	4.60	2⅝	5	5	6	5	¾	11/16	5/16	10¼	5⅛	6¼	10 11/16	3 15/16	10⅝	9⅝	8½	8¾	8¼	6	10 1/16	¾	2 1/16	2	3/16x3/32	1¾	3⅞	3¾	3¾	3/16x3/16
9	12½	16¾	7½	5.167	2⅝	5½	5½	8½	6¾	¾	11/16	3/16	11⅝	6	6¾	11 3/16	3 15/16	11 3/16	10⅛	9	9¾	8¾	6	10 9/16	¾	2 1/16	2	3/16x3/32	2	4⅜	4¼	4¼	½x¼
10	14	20½	8½	6	3	6	6	11	7½	¾	13/16	¼	12⅞	6 7/16	8 1/16	12 5/16	4 3/16	12½	11⅛	9¾	10½	9½	6½	11¾	⅞	2 5/16	2¼	3/16x3/32	2¼	4⅝	4½	4½	½x¼
11	14½	22	9⅝	6½	3	7	6¼	11⅜	8⅝	¾	13/16	3/16	13½	7 11/16	8 5/16	12 9/16	4 3/16	13	12⅜	10½	12	9¾	6½	12¾	⅞	2 5/16	2¼	3/16x3/32	2½	5⅛	5	5	5/8x5/16
12	17½	25	11¼	7	3½	8	7½	12½	10	1	1 1/16	3/16	15¾	8¾	9½	14 9/16	4⅝	14⅛	14⅛	11¾	13½	11½	7⅛	14 11/16	1	2 5/16	2½	¼x⅛	2¾	5⅝	5½	5½	5/8x5/16
13	19	27	12	7⅝	3½	9	8	13½	10½	1	1 1/16	5/16	17¼	9½	10¼	15 9/16	4⅝	14¾	16⅜	13½	15	12¼	7⅛	15 11/16	1	2 5/16	2½	¼x⅛	3	6⅛	6	6	¾x⅜
14	22½	30	13	8⅛	4	10	9¾	15½	11½	1¼	1 5/16	¼	20	10	11¾	16⅛	5½	16⅛	18⅞	15	16½	13	8	17 5/16	1	2½	2½	¼x⅛	3¼	6⅝	6½	6½	¾x⅜
15	25½	30	15	9	5.167	10½	11	13¼	13¼	1⅜	1 5/16	¼	23	11½	13⅝	19¾	6¾	18½	19½	16¼	17½	16	9½	19 13/16	1⅛	2¾	2¾	¼x⅛	3¾	7¼	7	7	⅞x7/16

*Shaft diameter tolerance + .000—.001. For construction purposes, send for certified dimension sheets.

PARTS LIST:

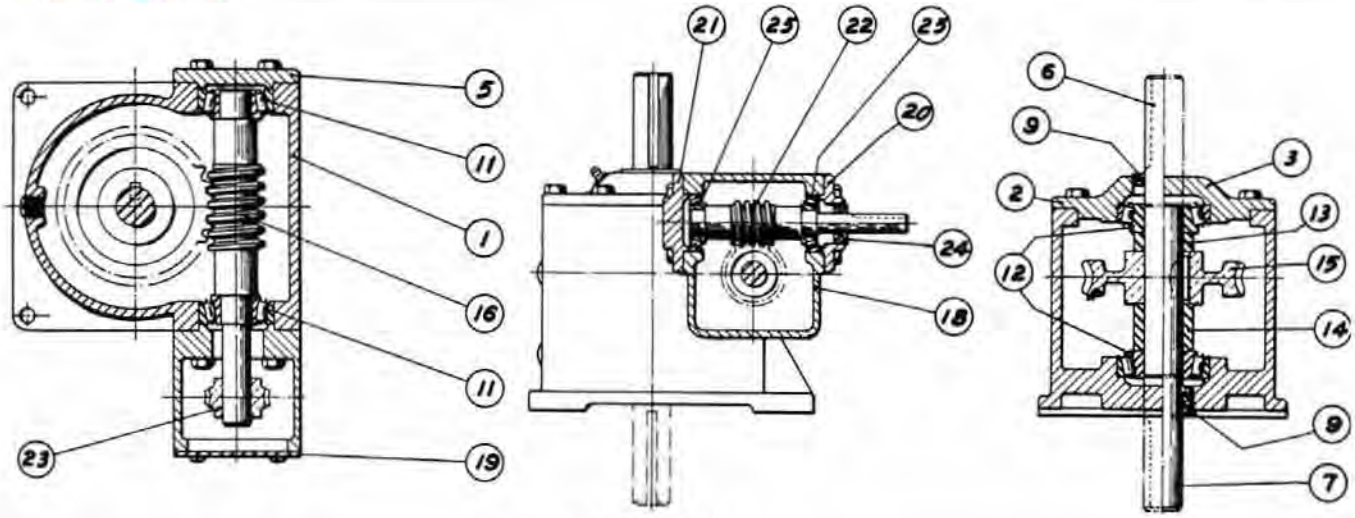

PARTS INDEX

Part No.	Description
1	Housing
2	Slow Speed Cover — Open
3	Slow Speed Cover — Closed
5	Intermediate Cover — Closed
5A	Intermediate Adapter — Not Shown — Used with Inter. Cover — Closed Units 10 Thru 15 Incl.
6	Slow Speed Shaft — Top Extension
7	Slow Speed Shaft — Bottom Extension
9	Oil Seal — S. S. Shaft
*11	Roller Bearing — Intermediate Speed
12	Roller Bearing — Slow Speed
13	Slow Speed Spacer — Short
14	Slow Speed Spacer — Long
15	Slow Speed Worm Gear — Bronze
16	Intermediate Speed Worm and Shaft Integral
18	High Speed Attachment Housing
19	High Speed Attachment Housing Cover
20	High Speed Cover — Open
21	High Speed Cover — Closed
22	High Speed Worm and Shaft Integral
23	High Speed Worm Gear — Bronze
24	Oil Seal — High Speed
25	Roller Bearing — High Speed
26	Intermediate Lock Nut — Not Shown

* Series 2 thru 9 uses 2 Single Row Bearings. Series 10 thru 15 uses 1 Single and 1 Two Row Bearing.

SHAFT ARRANGEMENTS:

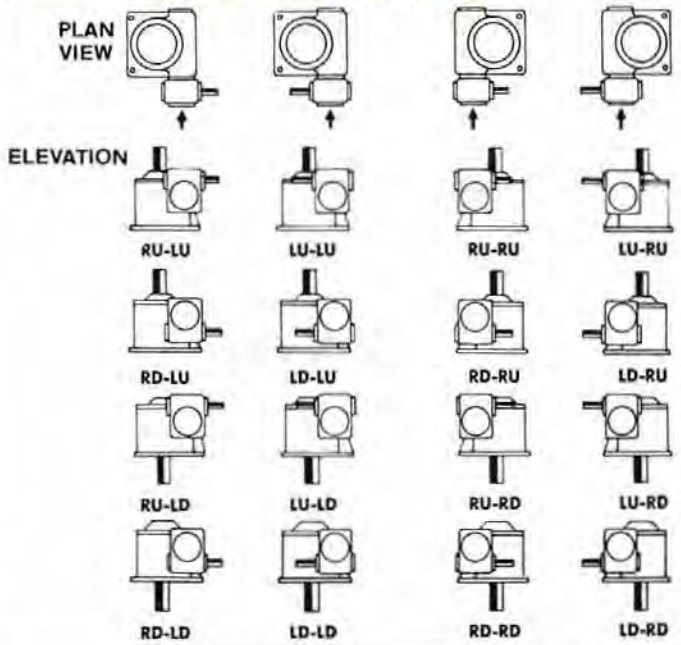

(A) The Reducer is viewed looking at the attachment housing.

(B) No extra charge for these assemblies provided the shaft extensions are of standard length.

(C) The input shaft may be driven in either direction.

(D) Units may be mounted in any position, (ceiling, sidewall, etc.), if specified when ordered.

WINSMITH

double reduction—motorized and gearmotor

SERIES MCTD-MCTDW (WITH MOTOR)

GEAR RATIOS AVAILABLE 50:1 THRU 3600:1
COMPLETE TORQUE AND HP RATINGS ..... PAGES 152-222
OVERHUNG LOAD RATINGS .....PAGES 153-223
SERVICE FACTORS ..... PAGE 230
COUPLING ADAPTERS ..... PAGE 120
HYDRAULIC MOTOR ADAPTERS ..... PAGE 116

TABLE OF WEIGHTS

Unit	2	3	4	5	6	7	8	9	10	11	12	13	14	15
Net Weight	26	27	38	67	75	141	151	173	267	310	468	495	679	1360

Units #3, 4, 5, 6, 7, 8, 9, 10, and 12 are available with hollow output shafts. See page 98.
Alloy steel slow speed shafts available.
Hydraulic Motor Flanges available, see pages 116-118. **Weights are without motor.*
Units 2 through 15 available in "C" flange coupling type, see page 120.

CTDMW
See page 120.

DIMENSIONS: Dimensions apply to speed reducer only. For motor dimensions see next page.

FRAME, KEYWAY and BORE DIMENSIONS

Frame No.	56C	143TC 145TC	182TC 184TC 213TCZ* 215TCZ*	213TC 215TC
AJ	5⅞	5⅞	7¼	7¼
AK	4½	4½	8½	8½
BB	3/16	3/16	3/16	3/16
BD	6½	6½	9	10
BE	3/16	3/16	3/8	½
BF	13/32	13/32	17/32	17/32
Keyway	3/16 x 3/32	3/16 x 3/32	¼ x ⅛	3/16 x 3/32
Bore +.001 −.000	.6255	.8755	1.1255*	1.3755

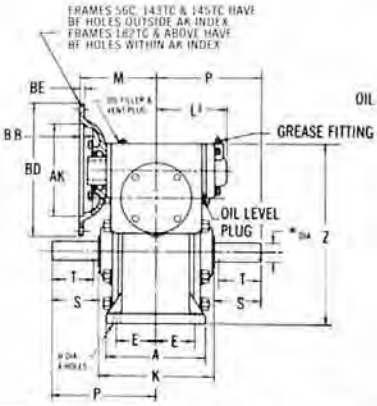

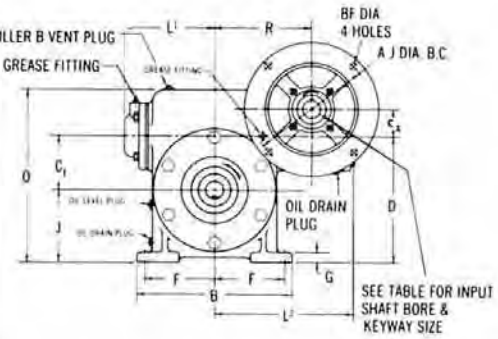

SPEED REDUCER DIMENSIONS (in inches) Refer to Section D for these sizes.

Unit No.	A	B	C_1	C_2	D	E	F	G	H	J	K	L_1	L_2	L_3	M	O	P	R	Z	Slow Speed Shaft W*	S	T	Keyway	Maximum Frame Size
2MCTD	4⅜	5½	1¾	1.33	4 3/16	1¾	2 5/16	½	13/32	2 7/16	4¾	2⅞	5 15/16	3 3/16	3⅝	6	4½	4	7 1/16	¾	2⅛	2	3/16 x 3/32	56C
3MCTD	4¾	6	2	1.33	4⅝	1⅞	2½	½	13/32	2⅝	4¾	2⅞	5 15/16	3 3/16	3⅝	6¼	4¾	4	7½	⅞	2⅜	2¼	3/16 x 3/32	56C
4MCTD	4¾	7½	2⅜	1.33	6⅛	1⅞	3¼	½	13/32	3½	5⅜	3 15/16	6 15/16	3 3/16	3⅝	8⅜	5⅜	5	9	1	2 11/16	2½	¼ x ⅛	56C
5MCTD	6	8¼	3	2	7	2⅜	3½	⅝	9/16	4	6	4 3/16	7 13/16	3 9/16	3⅝	9⅜	5⅞	5¾	10 11/16	1¼	2⅞	2¾	¼ x ⅛	145TC - 184C
6MCTD	6¼	9¼	3½	2	8	2⅝	4⅛	⅝	9/16	4½	7¼	4⅝	8 7/16	3 9/16	3⅝	11	7	6¼	11 11/16	1½	3⅜	3¼	3/8 x 3/16	145TC - 184C
7MCTD	7	11	4	2⅝	9	2⅞	4⅞	⅝	9/16	5	7¼	5½	9 11/16	4¼	4½	13	7½	7¼	14 1/16	1¾	3⅞	3¾	3/8 x 3/16	145TC - 184C
8MCTD	8	12½	4.60	2⅝	10.100	3¼	5½	¾	11/16	5½	9¼	6¼	10 11/16	4¼	4½	14½	8½	8¼	15 3/16	1¾	3⅞	3¾	3/8 x 3/16	145TC - 184C
9MCTD	8½	13½	5.167	2⅝	11.167	3½	6	¾	11/16	6	9¼	6¾	11 3/16	4¼	4½	16	9	8¾	16¼	2	4⅜	4¼	½ x ¼	145TC - 184C
10MCTD	10	15	6	3	13	4	6½	¾	13/16	7	10¼	8 3/16	12 5/16	4½	5⅛	18½	9¾	9½	18¾	2¼	4⅝	4½	½ x ¼	184TC - 215C
11MCTD	10	16	6½	3	14	4	7	¾	13/16	7½	10¾	8 5/16	12 9/16	4½	5⅛	20	10½	9¾	19¾	2½	5⅛	5	5/8 x 5/16	184TC - 215C
12MCTD	12½	18	7	3½	15½	5	7½	1	1 1/16	8½	12¼	9½	14 9/16	5	5½	21½	11¾	11½	22 3/16	2¾	5⅝	5½	5/8 x 5/16	184TC - 215C
13MCTD	14½	19	7⅝	3½	17	5¾	8	1	1 1/16	9⅜	14¾	10¼	15 5/16	5	5½	23	13½	12¼	23 11/16	3	6⅛	6	¾ x ⅜	184TC - 215C
14MCTD	16½	21	8⅛	4	18⅛	6¾	9	1¼	1 5/16	10	16¾	11¾	16⅛	5⅞	6⅜	25	15	13	25 7/16	3¼	6⅝	6½	¾ x ⅜	184TC - 215C
15MCTD	19	23	9	5.17	22	7½	8¼	1¾	1 5/16	13	18	13⅝	19¾	6¾	8 9/16	29 13/16	16¼	16	30¾	3¾	7¼	7	7/8 x 7/16	256TC

***Slow speed shaft diameter tolerance +.000 −.001. For construction purposes send for certified dimension sheets.**

MOTOR DIMENSIONS:

H.P. @ 1800 RPM	1/6		1/4		1/3		1/2		3/4		1	1 1/2	2	3	5
Phase	Single *	Three	Single *	Three	Single *	Three	Single *	Three	Single *	Three	Three	Three	Three	Three	Three
AG	7 1/2	7 1/2	7 3/4	8 1/4	8 1/4	8 3/4	8 3/4	8 3/4	9 1/4	9 1/4	9 3/4	10 3/4	10 3/4	12 1/4	13 3/4
AP	5 21/32	5 21/32	5 21/32	5 21/32	6 31/64	6 31/64	6 31/64	6 31/64	6 31/64	6 31/64	6 31/64	6 31/64	6 31/64	10 11/32	10 11/32

*Single phase motor is capacitor start. Dimensions as shown are for open dripproof enclosure.
Motors can be furnished open dripproof or enclosed.

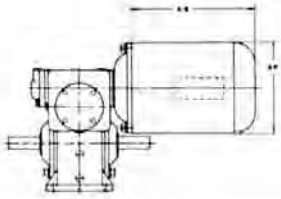

PARTS LIST:

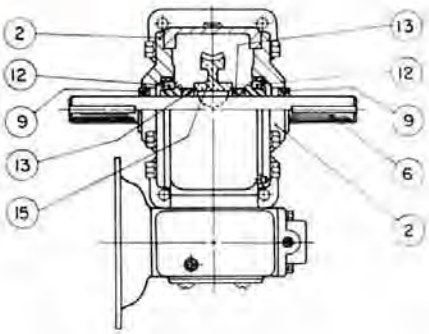

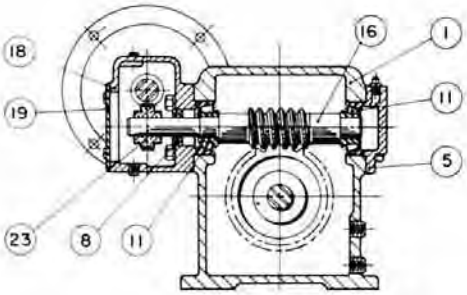

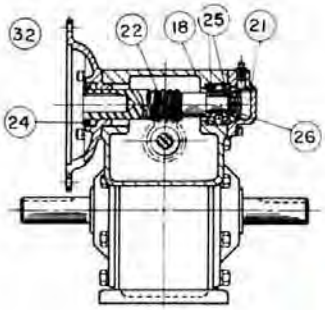

PARTS INDEX

Part No.	Description
1	Housing
2	Slow Speed Cover — Open
3	Slow Speed Cover—Closed—Not Shown
5	Intermediate Cover — Closed
5A	Intermediate Adapter — Not Shown Used With Inter. Cover — Closed Units 10 Thru 15 Incl.
6	Slow Speed Shaft — Double Extension
7	Slow Speed Shaft — Single Extension — Not Shown
8	Oil Seal — Intermediate Speed
9	Oil Seal Slow Speed
*11	Roller Bearing — Intermediate Speed Shaft
12	Roller Bearing — Slow Speed
13	Slow Speed Spacer
15	Slow Speed Worm Gear — Bronze
16	Intermediate Speed Worm and Shaft Integral
18	High Speed Attachment Housing
19	High Speed Attachment Housing Cover
21	High Speed Cover — Closed
22	High Speed Worm and Shaft Integral
23	High Speed Worm Gear — Bronze
24	High Speed Oil Seal
25	Roller Bearing — High Speed
26	High Speed Lock Nut
32	Motor Adapter
32B	Motor Adapter Spacer (Sizes 7, 8 & 9 only)
34	Intermediate Speed Lock Nut–Not Shown Used on Units 10 Thru 15 Incl.
35	Intermediate Speed Lock Washer — Not Shown — Used on Units 10 Thru 15 Incl.

* Series 2 thru 9 incl. use 2 Single Row Bearings. Series 10 thru 15 incl. use 1 Single Row and 1 Double Row Bearing.

SHAFT ARRANGEMENTS:

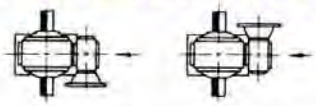

ASSEMBLY LU-LR ASSEMBLY RU-LR

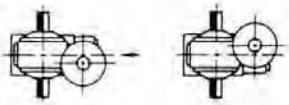

OPTIONAL

ASSEMBLY UL-LR* ASSEMBLY UR-LR*

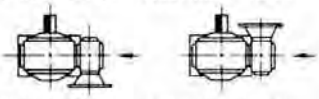

ASSEMBLY LU-R ASSEMBLY RU-R

PLAN VIEW

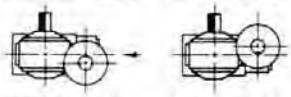

STANDARD

ASSEMBLY UL-R* ASSEMBLY UR-R*

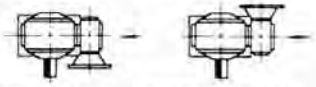

ASSEMBLY LU-L ASSEMBLY RU-L

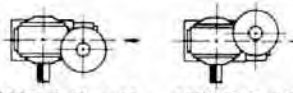

STANDARD

ASSEMBLY UL-L* ASSEMBLY UR-L*

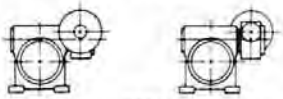

ELEVATION

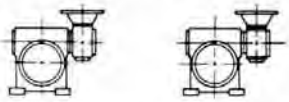

For larger sizes, use CTDM (Page 120).

*These assembles can be supplied in Units 2-8 only.
For larger units use Model CTDM. See Page 120.

(A) The Reducer is viewed looking at the attachment housing.

(B) No extra charge for standard assemblies provided shaft extensions are standard length.

(C) The input shaft may be driven in either direction.

(D) Units may be mounted in any position, (ceiling, sidewall etc.) if specified when ordered.

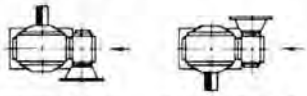

ASSEMBLY LD-R ASSEMBLY RD-L

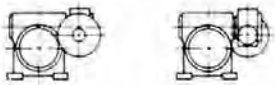

WINSMITH

double reduction — motorized and gearmotor

SERIES: MCVD-MCVDW (WITH MOTOR)

GEAR RATIOS AVAILABLE 50:1 THRU 3600:1

COMPLETE TORQUE AND HP RATINGS ..... PAGES 152-222
OVERHUNG LOAD RATINGS ..... PAGES 153-223
SERVICE FACTORS ..... PAGE 230
COUPLING ADAPTERS ..... PAGE 120
HYDRAULIC MOTOR ADAPTERS ..... PAGE 116

TABLE OF WEIGHTS

Unit	2	3	4	5	6	7	8	9	10	11	12	13	14	15
Net Weight	27	28	46	65	82	118	150	200	305	392	498	680	920	1240

Alloy steel slow speed shafts available.
Hydraulic Motor Flanges available, see pages 116-118.

Units 2 through 15 available in "C" flange coupling type, see page 120.

CVDMW
See page 120.

DIMENSIONS: Dimensions apply to speed reducer only. For motor dimension see next page.

FRAME, KEYWAY and BORE DIMENSIONS

Frame No.	56C	143TC 145TC	182TC 184TC 213TCZ* 215TCZ*	213TC 215TC
AJ	5⅞	5⅞	7¼	7¼
AK	4½	4½	8½	8½
BB	¾	¾	¾	¾
BD	6½	6½	9	10
BE	¾	¾	⅞	½
BF	13/32	13/32	13/32	13/32
Keyway	3/16 x 3/32	3/16 x 3/32	¼ x 1/8	3/16 x 3/32
Bore +.001 −.000	.6255	.8755	1.1255*	1.3755

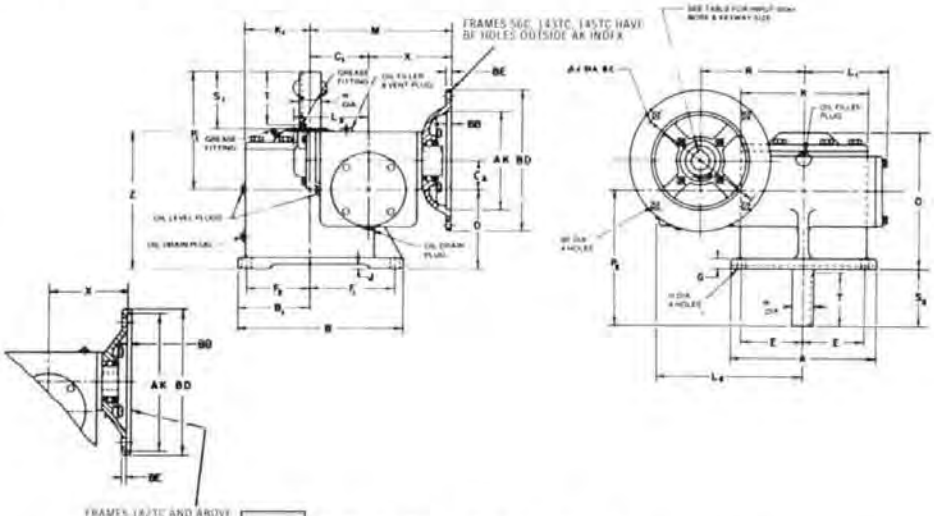

SPEED REDUCER DIMENSIONS (in inches)

Refer to D Line for these sizes.

Unit No.	A	B	B_1	C_1	C_2	D	E	F_1	F_2	G	H	J	K	K_1	L_1	L_2	L_3	M	O	P_1	P_2	R	X	Z	Slow Speed Shaft W*	S_1	S_2	T	Keyway	Maximum Frame Size
2MCVD	4¾	5¾	2½	1¾	1.33	2 13/16	2	2⅞	2⅛	½	13/32	⅛	4 5/16	2 3/16	2⅞	5 15/16	3 3/16	5⅛	5 5/16	4½	4 13/16	4	3⅝	5½	⅜	2⅛	2	2	3/16x3/32	56C
3MCVD	4¾	6	2⅛	2	1.33	3¼	2	3⅛	2⅛	½	13/32	⅛	4 5/16	2 3/16	2⅞	5 15/16	3 3/16	5⅛	5⅝	4¾	5½	4	3⅝	6⅛	⅞	2⅜	2¼	2⅛	3/16x3/32	56C
4MCVD	6¾	7½	3¼	2⅜	1.33	3⅝	2⅞	3⅞	2⅞	½	13/32	3/16	5⅞	2 15/16	3 15/16	6 15/16	3 3/16	6¼	6 5/16	5⅜	6⅛	5	3⅝	6½	1	2 11/16	2½	2½	¼x⅛	56C
5MCVD	7¼	8¾	3¾	3	2	3¾	3⅛	4½	3¼	⅜	9/16	⅛	6¾	3⅜	4 3/16	7 15/16	3 9/16	6⅝	6¾	5⅞	6½	5¾	3⅝	7 7/16	1¼	2⅞	2¾	2¾	¼x⅛	145TC-184C
6MCVD	8	10	4¼	3½	2	4	3½	5¼	3¾	⅜	9/16	3/16	7½	3¼	4⅝	8 7/16	3 9/16	7⅛	7⅜	7	7¼	6¼	3⅝	7 11/16	1½	3⅜	3¼	3¼	5/16x5/16	145TC-184C
7MCVD	9½	10⅞	4¾	4	2⅝	4½	4⅛	5½	4⅛	⅜	9/16	0	8 9/16	4 5/16	5½	9 11/16	4¼	8½	8⅛	7½	8¼	7¼	4½	9 9/16	1¾	3⅞	3¾	3¾	5/16x5/16	145TC-184C
8MCVD	11⅛	12⅛	5¾	4.60	2⅝	5	5	6	5	¾	11/16	5/16	10¼	5⅛	6¼	10 11/16	4¼	9⅛	9⅝	8½	8¾	8¼	4½	10 1/16	1¾	3⅞	3¾	3¾	5/16x5/16	145TC-184C
9MCVD	12½	16¾	7½	5.167	2⅝	5⅛	5½	8½	6¾	¾	11/16	5/16	11⅝	6	6¾	11 15/16	4¼	9 11/16	10⅛	9	9¾	8¾	4½	10 9/16	2	4⅝	4¼	4¼	½x¼	145TC-184C
10MCVD	14	20½	8½	6	3	6	6	11	7½	¾	13/16	¼	12⅞	6 7/16	8 1/16	12 5/16	4½	11⅛	11⅛	9¾	10½	9½	5⅛	11¾	2¼	4⅝	4½	4½	½x¼	184TC-215C
11MCVD	14½	22	9⅝	6½	3	7	6¼	11⅜	8⅛	¾	13/16	5/16	13½	7 11/16	8 5/16	12 5/16	4½	11⅝	12⅜	10½	12	9¾	5⅛	12¾	2½	5⅛	5	5	5/16x5/16	184TC-215C
12MCVD	17½	25	11¼	7	3½	8	7½	12½	10	1	1 1/16	5/16	15¾	8¾	9½	14 9/16	5	12½	14⅛	11¾	13½	11½	5½	14 1/16	2¾	5⅝	5½	5½	5/16x5/16	184TC-215C
13MCVD	19	27	12	7⅝	3½	9	8	13½	10½	1	1 1/16	5/16	17¼	9½	10¼	15 5/16	5	13⅛	16⅜	13½	15	12¼	5½	15 11/16	3	6⅛	6	6	¾x⅜	184TC-215C
14MCVD	22½	30	13	8⅛	4	10	9¾	15½	11½	1¼	1 5/16	¼	20	10	11¾	16⅛	5⅞	14½	18⅜	15	16½	13	6⅜	17 5/16	3¼	6⅝	6½	6½	¾x⅜	184TC-215C
15MCVD	25½	30	15	9	5.17	10½	11	13¼	13¼	1⅜	1 5/16	¼	23	11½	13⅝	19¾	6¾	17 9/16	19½	16¼	17½	16	8 9/16	19¼	3¾	7¼	7	7	7/8x7/16	256TC

*Shaft diameter tolerance + .000—.001. For construction purposes, send for certified dimension sheets.

MOTOR DIMENSIONS:

H.P. @ 1800 RPM	1/6		1/4		1/3		1/2		3/4		1	1 1/2	2	3	5
Phase	Single *	Three	Single *	Three	Single *	Three	Single *	Three	Single *	Three	Three	Three	Three	Three	Three
AG	7 1/2	7 1/2	7 3/4	8 1/4	8 1/4	8 3/4	8 3/4	8 3/4	9 1/4	9 1/4	9 3/4	10 3/4	10 3/4	12 1/4	13 3/4
AP	5 21/32	5 21/32	5 21/32	5 21/32	6 31/64	6 31/64	6 31/64	6 31/64	6 31/64	6 31/64	6 31/64	6 31/64	6 31/64	10 11/32	10 11/32

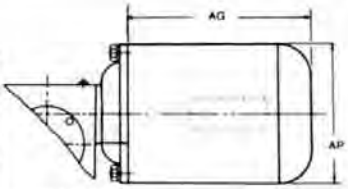

*Single phase motor is capacitor start. Dimensions as shown are for open dripproof enclosure. Motors can be furnished open dripproof or enclosed.

PARTS LIST:

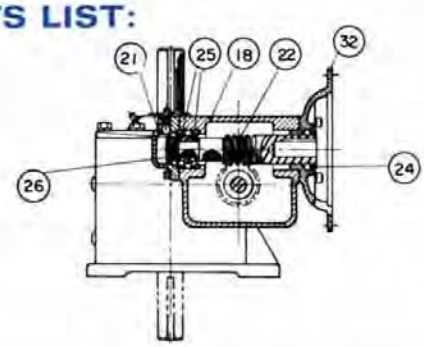

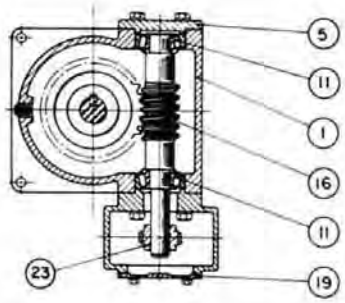

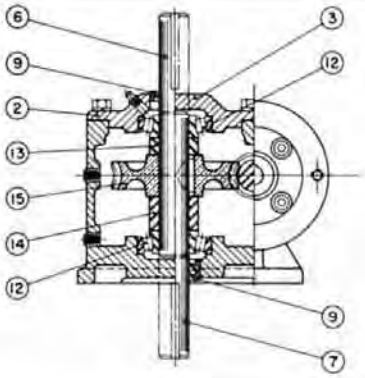

PARTS INDEX

Part No.	Description
1	Housing
2	Slow Speed Cover — Open
3	Slow Speed Cover — Closed
5	Intermediate Cover Closed
5A	Intermediate Adapter — Not Shown Used With Inter. Cover — Closed Units 10 Thru 15 Incl.
6	Slow Speed Shaft — Top Extension
7	Slow Speed Shaft — Bottom Extension
9	Oil Seal — Slow Speed
*11	Roller Bearing — Intermediate Speed Shaft
12	Roller Bearing — Slow Speed
13	Slow Speed Spacer — Short
14	Slow Speed Spacer — Long
15	Slow Speed Worm Gear — Bronze
16	Intermediate Speed Worm and Shaft Integral
18	High Speed Attachment Housing
19	High Speed Attachment Housing Cover
21	High Speed Cover — Closed
22	High Speed Worm and Shaft Integral
23	High Speed Worm Gear — Bronze
24	High Speed Oil Seal
25	Roller Bearing — High Speed
26	High Speed Lock Nut
32	Motor Adapter
32B	Motor Adapter Spacer (Sizes 7, 8 & 9 only)
34	Intermediate Speed Lock Nut — Not Shown Used on Units 10 Thru 15 Incl.
35	Intermediate Speed Lock Washer — Not Shown Used on Units 10 Thru 15 Incl.

* Series 2 thru 9 incl. use 2 Single Row Bearings. Series 10 thru 15 incl. use 1 Single Row and 1 Double Row Bearing.

SHAFT ARRANGEMENTS:

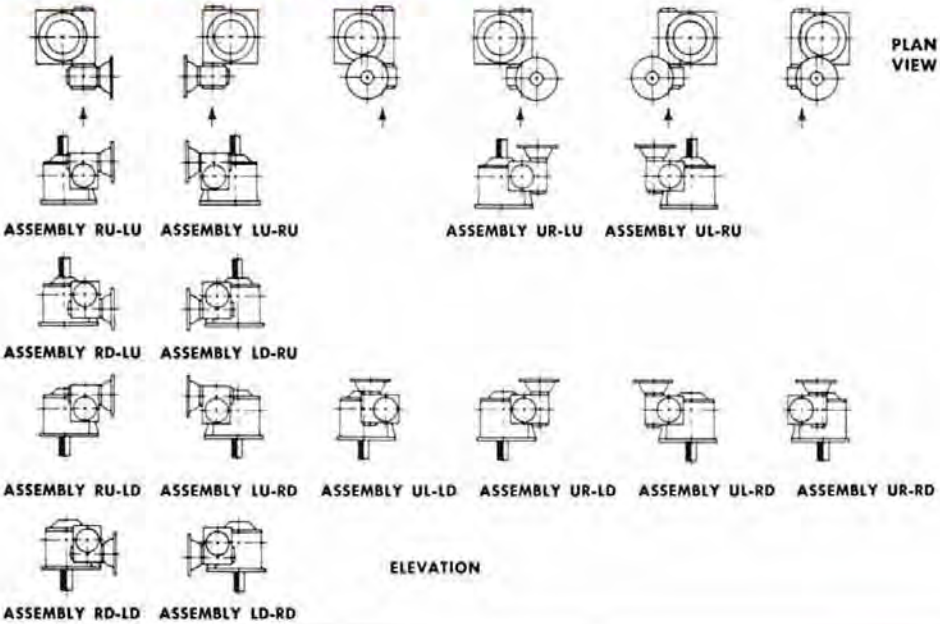

(A) The reducer is viewed looking at the attachment housing.

(B) No extra charge for illustrated assemblies provided shaft extensions are standard.

(C) The input shaft may be driven in either direction.

(D) Units may be mounted in any position, (ceiling, sidewall etc.) if specified when ordered.

WINSMITH

double reduction — helical and worm gear

SERIES: CBX

GEAR RATIOS AVAILABLE 50:1 THRU 180:1

COMPLETE TORQUE AND HP RATINGS ..... PAGES 152-222
OVERHUNG LOAD RATINGS .....PAGES 153-223
SERVICE FACTORS ..... PAGE 230
COUPLING ADAPTERS ..... PAGE 120
HYDRAULIC MOTOR ADAPTERS ..... PAGE 116

TABLE OF WEIGHTS

Unit	5	6	7	8	9	10	11	12	13	14
Net Weight	60	80	107	149	170	260	345	370	473	672

Units #5, 6, 7, 8, 9, 10, and 12 are available with hollow output shafts, see page 90-92. Alloy steel slow speed shafts available.

Units 5—14 available in "C" flange coupling type (CBXM), see page 120.
Units 5—10 & 12 available in "C" flange coupling type (SCBXMW), see page 120.

CBXM
See page 120.

SCBXMW
See page 120.

DIMENSIONS:

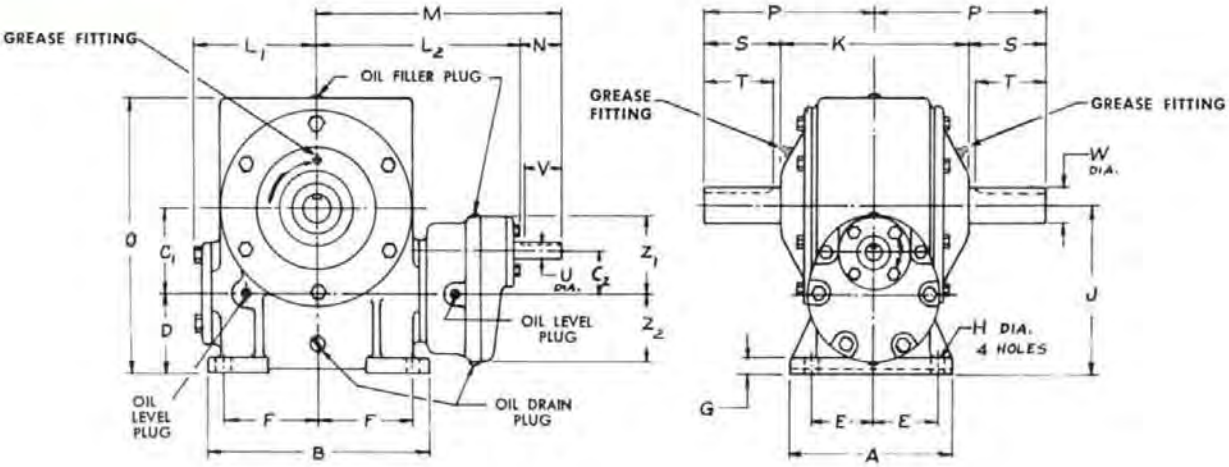

SPEED REDUCER DIMENSIONS (in inches)

Unit	A	B	C_1	C_2	D	E	F	G	H	J	K	L_1	L_2	M	O	P	Z_1	Z_2	High Speed Shaft				Slow Speed Shaft			
																			U*	N	V	Keyway	W*	S	T	Keyway
5	6	8 1/4	3	1 7/8	3	2 3/8	3 1/2	5/8	9/16	6	6	4 3/16	8 3/16	10 1/4	9 5/8	5 7/8	3 1/2	3 1/16	3/4	2 1/16	2	3/16 × 3/32	1 1/4	2 7/8	2 3/4	1/4 × 1/8
6	6 1/4	9 1/4	3 1/2	1 7/8	3 1/8	2 5/8	4 1/8	5/8	9/16	6 5/8	7 1/4	4 5/8	8 9/16	10 5/8	11	7	3 1/2	3 1/16	3/4	2 1/16	2	3/16 × 3/32	1 1/2	3 3/8	3 1/4	3/8 × 3/16
7	7	11	4	1 7/8	3 1/2	2 7/8	4 7/8	5/8	9/16	7 1/2	7 1/4	5 1/2	9 7/16	11 1/2	13	7 1/2	3 1/2	3 1/16	3/4	2 1/16	2	3/16 × 3/32	1 3/4	3 7/8	3 3/4	3/8 × 3/16
8	8	12 1/2	4.60	1 7/8	3 3/4	3 1/4	5 1/2	3/4	11/16	8.35	9 1/4	6 1/4	10 3/16	12 1/4	14 1/2	8 1/2	3 1/2	3 1/16	3/4	2 1/16	2	3/16 × 3/32	1 3/4	3 7/8	3 3/4	3/8 × 3/16
9	8 1/2	13 1/2	5.167	1 7/8	3 3/4	3 1/2	6	3/4	11/16	8.917	9 1/4	6 3/4	10 11/16	12 3/4	16	9	3 1/2	3 1/16	3/4	2 1/16	2	3/16 × 3/32	2	4 3/8	4 1/4	1/2 × 1/4
10	10	15	6	3	4 1/2	4	6 1/2	3/4	13/16	10 1/2	10 1/4	8 1/16	12 1/4	14 13/16	18 1/2	9 3/4	4 7/8	4 1/8	1	2 9/16	2 1/2	1/4 × 1/8	2 1/4	4 5/8	4 1/2	1/2 × 1/4
11	10	16	6 1/2	3	5	4	7	3/4	13/16	11 1/2	10 3/4	8 5/16	12 1/2	15 1/16	20	10 1/2	4 7/8	4 1/8	1	2 9/16	2 1/2	1/4 × 1/8	2 1/2	5 1/8	5	5/8 × 5/16
12	12 1/2	18	7	3	6	5	7 1/2	1	1 1/16	13	12 1/4	9 1/2	13 11/16	16 1/4	21 1/2	11 3/4	4 7/8	4 1/8	1	2 9/16	2 1/2	1/4 × 1/8	2 3/4	5 5/8	5 1/2	5/8 × 5/16
13	14 1/2	19	7 5/8	3	6 1/2	5 3/4	8	1	1 1/16	14 1/8	14 3/4	10 1/4	14 7/16	17	23	13 1/2	4 7/8	4 1/8	1	2 9/16	2 1/2	1/4 × 1/8	3	6 1/8	6	3/4 × 3/8
14	16 1/2	21	8 1/8	3	7	6 3/4	9	1 1/4	1 5/16	15 1/8	16 3/4	11 3/4	16 1/2	19 1/16	25	15	4 7/8	4 5/8	1	2 9/16	2 1/2	1/4 × 1/8	3 1/4	6 5/8	6 1/2	3/4 × 3/8

*Shaft diameter tolerances +.000—.001. For construction purposes send for Certified Dimension Sheets.

PARTS LIST:

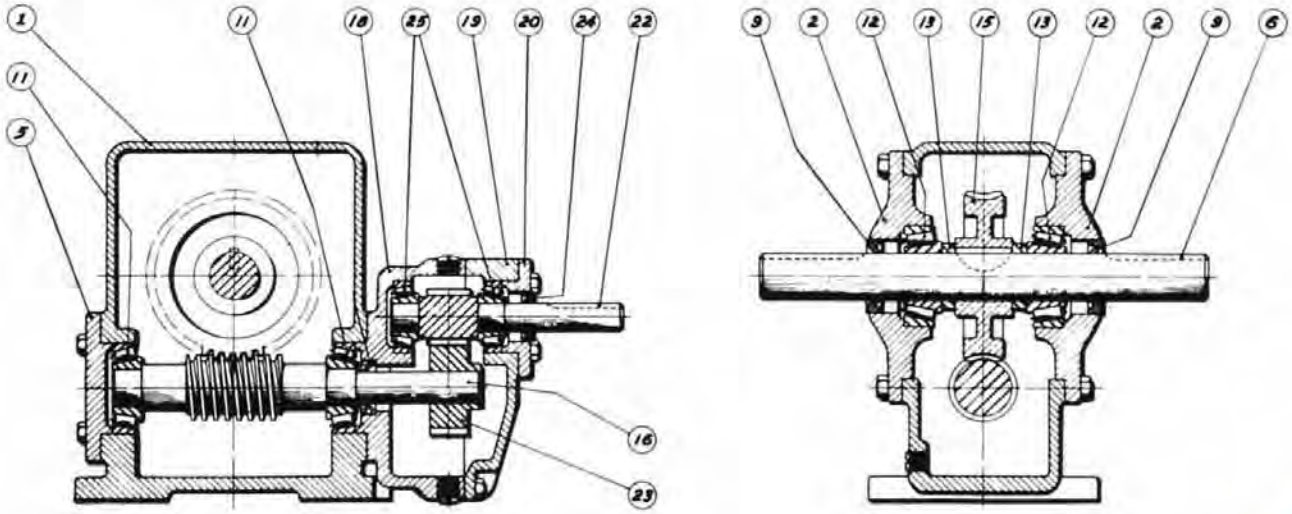

PARTS INDEX

Part No.	Description
1	Housing
2	Slow Speed Cover — Open
3	Slow Speed Cover — Closed — Not Shown
5	Intermediate Cover — Closed
5A	Intermediate Adapter — Not Shown Used with Inter. Cover — Closed Units 10 Thru 14 Incl.
6	Slow Speed Shaft — Double Extension
7	Slow Speed Shaft — Single Extension — Not Shown
9	Oil Seal — Slow Speed
*11	Roller Bearing — Intermediate Speed
12	Roller Bearing — Slow Speed
13	Slow Speed Spacer
15	Slow Speed Worm Gear — Bronze
16	Intermediate Speed Worm and Shaft Integral
18	High Speed Attachment Housing
19	High Speed Attachment Housing Cover
20	High Speed Cover — Open
22	High Speed Pinion and Shaft Integral
23	Intermediate Helical Gear
24	Oil Seal — High Speed
25	Roller Bearing — High Speed
26	Intermediate Lock Nut — Not Shown Used On Units 10 Thru 14 Incl.

* Series 1 Thru 9 Incl. Uses 2 Single Row Bearings. Series 10 Thru 14 Incl. Use 1 Single Row and 1 Double Row Bearing.

3

SHAFT ARRANGEMENTS:

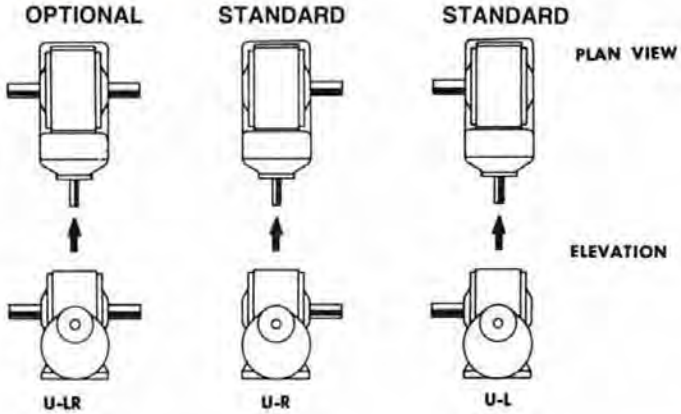

(A) The reducer is viewed looking at the High Speed Shaft which has a single extension only.

(B) No extra charge for above assemblies provided shaft extensions are of standard length.

(C) Input shaft may be rotated in either direction.

(D) Units may be mounted in any position, (ceiling, sidewall, etc.), if specified when ordered.

(E) Helical housing can be rotated in four separate positions—however housing interferences occur in certain sizes—if assemblies are required other than shown, consult factory.

WINSMITH

double reduction—helical and worm gear

SERIES: CTX

GEAR RATIOS AVAILABLE 50:1 THRU 180:1
COMPLETE TORQUE AND HP RATINGS ..... PAGES 152-222
OVERHUNG LOAD RATINGS .....PAGES 153-223
SERVICE FACTORS ..... PAGE 230
COUPLING ADAPTERS ..... PAGE 120
HYDRAULIC MOTOR ADAPTERS ..... PAGE 116

TABLE OF WEIGHTS

Unit	5	6	7	8	9	10	11	12	13	14
Net Weight	65	80	108	148	170	263	338	387	502	670

Units #5, 6, 7, 8, 9, 10, and 12 are available with hollow output shafts, see page 92. Alloy steel slow speed shafts available.
Units 5—15 available in "C" flange coupling type (CTXM), see page 120.
Units 5—10 & 12 available in "C" flange coupling type (SCTXM), see page 120.

Additional Series Available: Series SCTX (Double Reduction - Hollow Shaft) and SFX - (Double Reduction - Hollow Shaft).

For SCTX and SFX output stage dimensions, see STD page 92 and SFD page 90 respectively.

For SCTX and SFX input stage dimensions, see CTX dimensions below.

For construction purposes send for certified dimension sheets.

DIMENSIONS:

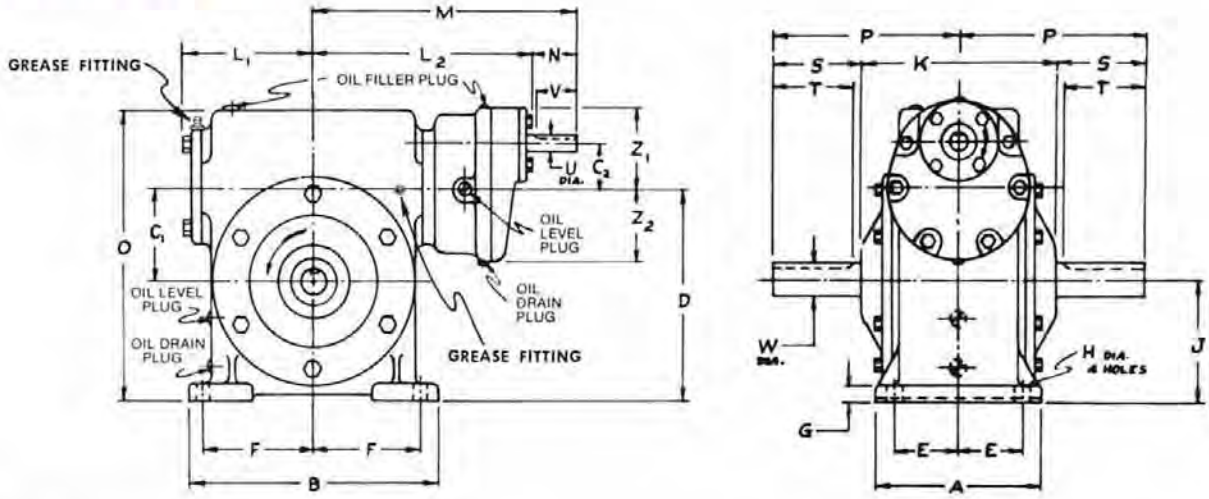

SPEED REDUCER DIMENSIONS (in inches)

Unit	A	B	C_1	C_2	D	E	F	G	H	J	K	L_1	L_2	M	O	P	Z_1	Z_2	High Speed Shaft U*	High Speed Shaft N	High Speed Shaft V	High Speed Shaft Keyway	Slow Speed Shaft W*	Slow Speed Shaft S	Slow Speed Shaft T	Slow Speed Shaft Keyway
5	6	8 1/4	3	1 7/8	7	2 3/8	3 1/2	5/8	9/16	4	6	4 3/16	8 3/16	10 1/4	9 5/8	5 7/8	3 1/2	3 1/16	3/4	2 1/16	2	3/16 × 3/32	1 1/4	2 7/8	2 3/4	1/4 × 1/8
6	6 1/4	9 1/4	3 1/2	1 7/8	8	2 5/8	4 1/8	5/8	9/16	4 1/2	7 1/4	4 5/8	8 9/16	10 5/8	11	7	3 1/2	3 1/16	3/4	2 1/16	2	3/16 × 3/32	1 1/2	3 3/8	3 1/4	3/8 × 3/16
7	7	11	4	1 7/8	9	2 7/8	4 7/8	5/8	9/16	5	7 1/4	5 1/2	9 7/16	11 1/2	13	7 1/2	3 1/2	3 1/16	3/4	2 1/16	2	3/16 × 3/32	1 3/4	3 7/8	3 3/4	3/8 × 3/16
8	8	12 1/2	4.60	1 7/8	10.100	3 1/4	5 1/2	3/4	11/16	5 1/2	9 1/4	6 1/4	10 3/16	12 1/4	14 1/2	8 1/2	3 1/2	3 1/16	3/4	2 1/16	2	3/16 × 3/32	1 3/4	3 7/8	3 3/4	3/8 × 3/16
9	8 1/2	13 1/2	5.167	1 7/8	11.167	3 1/2	6	3/4	11/16	6	9 1/4	6 3/4	10 11/16	12 3/4	16	9	3 1/2	3 1/16	3/4	2 1/16	2	3/16 × 3/32	2	4 3/8	4 1/4	1/2 × 1/4
10	10	15	6	3	13	4	6 1/2	3/4	13/16	7	10 1/4	8 1/16	12 1/4	14 13/16	18 1/2	9 3/4	4 7/8	4 1/8	1	2 9/16	2 1/2	1/4 × 1/8	2 1/4	4 5/8	4 1/2	1/2 × 1/4
11	10	16	6 1/2	3	14	4	7	3/4	13/16	7 1/2	10 3/4	8 5/16	12 1/2	15 1/16	20	10 1/2	4 7/8	4 1/8	1	2 9/16	2 1/2	1/4 × 1/8	2 1/2	5 1/8	5	5/8 × 5/16
12	12 1/2	18	7	3	15 1/2	5	7 1/2	1	1 1/16	8 1/2	12 1/4	9 1/2	13 11/16	16 1/4	21 1/2	11 3/4	4 7/8	4 1/8	1	2 9/16	2 1/2	1/4 × 1/8	2 3/4	5 5/8	5 1/2	5/8 × 5/16
13	14 1/2	19	7 5/8	3	17	5 3/4	8	1	1 1/16	9 3/8	14 3/4	10 1/4	14 7/16	17	23	13 1/2	4 7/8	4 1/8	1	2 9/16	2 1/2	1/4 × 1/8	3	6 1/8	6	3/4 × 3/8
14	16 1/2	21	8 1/8	3	18 1/8	6 3/4	9	1 1/4	1 5/16	10	16 3/4	11 3/4	16 1/2	19 1/16	25	15	4 7/8	4 5/8	1	2 9/16	2 1/2	1/4 × 1/8	3 1/4	6 5/8	6 1/2	3/4 × 3/8

*Shaft diameter tolerances +.000—.001. For construction purposes send for Certified Dimension Sheets.

PARTS LIST:

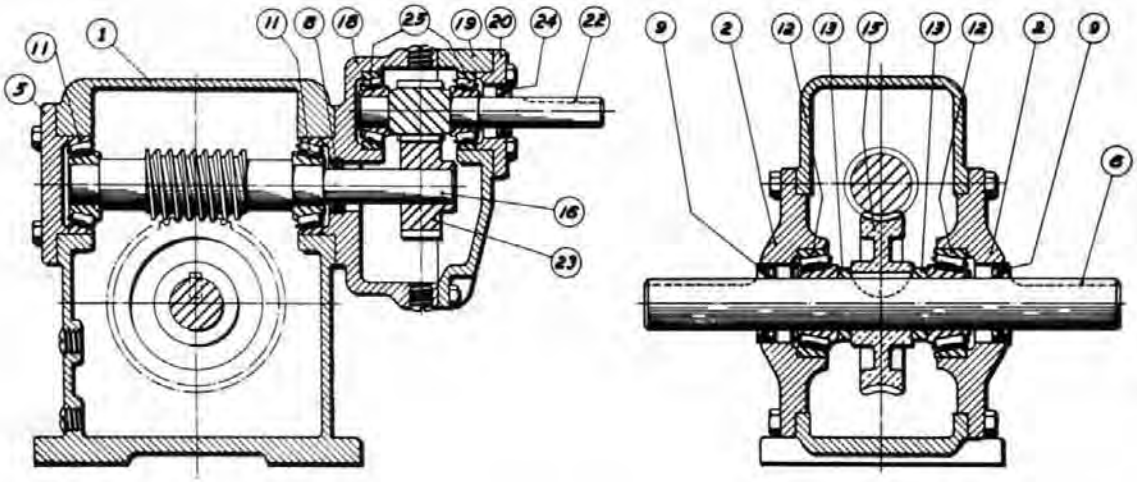

PARTS INDEX

Part No.	Description
1	Housing
2	Slow Speed Cover — Open
3	Slow Speed Cover — Closed — Not Shown
5	Intermediate Cover — Closed
5A	Intermediate Adapter — Not Shown Used With Inter. Cover — Closed Units 10 Thru. 14 Incl.
6	Slow Speed Shaft — Double Extension
7	Slow Speed Shaft — Single Extension — Not Shown
8	Oil Seal — Intermediate Speed
9	Oil Seal — Slow Speed
*11	Roller Bearing — Intermediate Speed
12	Roller Bearing — Slow Speed
13	Slow Speed Spacer
15	Slow Speed Worm Gear — Bronze
16	Intermediate Speed Worm and Shaft Integral
18	High Speed Attachment Housing
19	High Speed Attachment Housing Cover
20	High Speed Cover — Open
22	High Speed Pinion Shaft Integral
23	Intermediate Helical Gear
24	Oil Seal — High Speed
25	Roller Bearing — High Speed
26	Intermediate Lock Nut — Not Shown Used On Units 10 Thru. 14 Incl.

* Series 5 Thru 9 Uses 2 Single Row Bearings. Series 10 Thru 14 Uses 1 Single and 1 Two Row Bearing.

SHAFT ARRANGEMENTS:

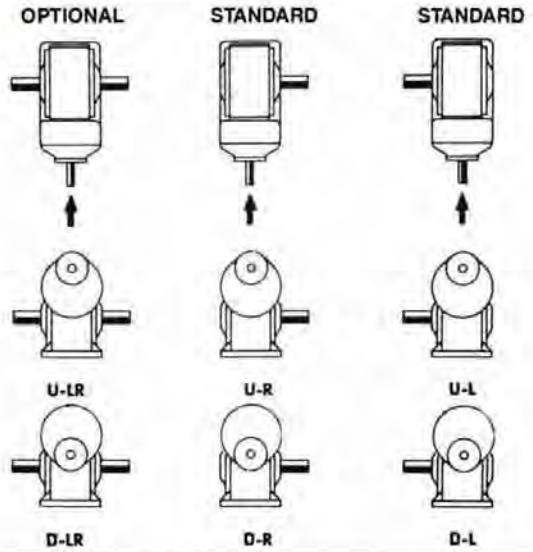

(A) The Reducer is viewed looking at the High Speed Shaft which has a single extension only.

(B) No extra charge for standard assemblies provided the shaft extensions are of standard length.

(C) Input shaft may be rotated in either direction.

(D) Units may be mounted in any position, (ceiling, sidewall, etc.), if specified when ordered.

(E) Helical Housing can be rotated in four separate positions—if desired arrangement is not shown, consult factory.

WINSMITH

double reduction—helical and worm gear

SERIES: CVX

GEAR RATIOS AVAILABLE 50:1 THRU 180:1
COMPLETE TORQUE AND HP RATINGS ..... PAGES 152-222
OVERHUNG LOAD RATINGS .....PAGES 153-223
SERVICE FACTORS ..... PAGE 230
COUPLING ADAPTERS ..... PAGE 120
HYDRAULIC MOTOR ADAPTERS ..... PAGE 116

TABLE OF WEIGHTS

Unit	5	6	7	8	9	10	11	12	13	14
Net Weight	65	77	111	141	185	280	409	500	615	740

Alloy steel slow speed shafts available.
Units 5—14 available in "C" flange coupling type (CVXM), see page 120.
Units 5—10 & 12 available in "C" flange coupling type (LXM), see page 120.

Additional Series Available: Series LX (Double Reduction - Drop Bearing Type—Helical and Worm)

For LX output stage dimensions, see LD page 98.

For LX input stage dimensions, see CVX dimensions below.

For construction purposes send for Certified Dimension sheets.

DIMENSIONS:

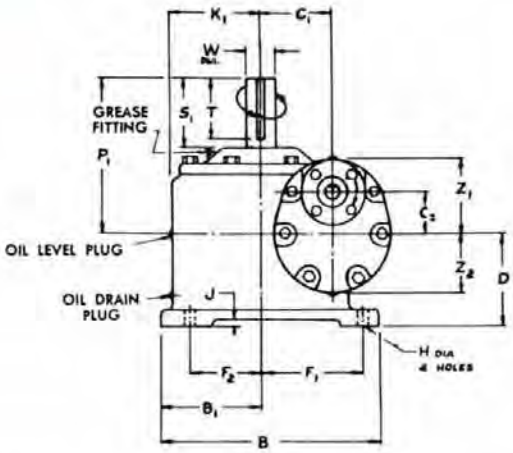

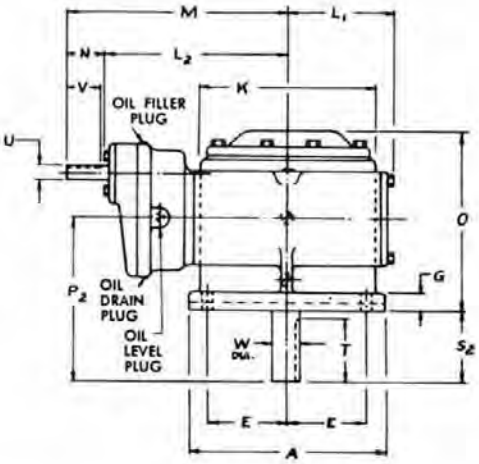

SPEED REDUCER DIMENSIONS (in inches)

Unit	A	B	B_1	C_1	C_2	D	E	F_1	F_2	G	H	J	K	K_1	L_1	L_2	M	O	P_1	P_2	Z_1	Z_2	High Speed Shaft U*	N	V	Keyway	Slow Speed Shaft W*	S_1	S_2	T	Keyway
5	7¼	8¾	3¾	3	1⅞	3¾	3⅛	4½	3¼	⅝	9/16	⅛	6¾	3⅜	4 3/16	8 3/16	10¼	6¾	5⅞	6½	3½	3 1/16	¾	2 1/16	2	3/16 × 3/32	1¼	2⅞	2¾	2¾	¼ × ⅛
6	8	10	4¼	3½	1⅞	4	3½	5¼	3¾	⅝	9/16	3/16	7½	3¾	4⅝	8 9/16	10⅝	7⅝	7	7¼	3½	3 1/16	¾	2 1/16	2	3/16 × 3/32	1½	3⅜	3¼	3¼	⅜ × 3/16
7	9½	10⅞	4¾	4	1⅞	4½	4⅛	5½	4⅛	⅝	9/16	0	8 9/16	4 5/16	5½	9 1/16	11½	8⅛	7½	8¼	3½	3 1/16	¾	2 1/16	2	3/16 × 3/32	1¾	3⅞	3¾	3¾	⅜ × 3/16
8	11½	12½	5¾	4.60	1⅞	5	5	6	5	¾	11/16	5/16	10¼	5⅛	6¼	10 5/16	12¼	9⅝	8½	8¾	3½	3 1/16	¾	2 1/16	2	3/16 × 3/32	1¾	3⅞	3¾	3¾	⅜ × 3/16
9	12½	16¾	7½	5.167	1⅞	5½	5½	8½	6¾	¾	11/16	3/16	11⅜	6	6¾	10 11/16	12¾	10⅛	9	9¾	3½	3 1/16	¾	2 1/16	2	3/16 × 3/32	2	4⅜	4¼	4¼	½ × ¼
10	14	20½	8½	6	3	6	6	11	7½	¾	13/16	¼	12⅞	6 5/16	8 1/16	12¼	14 13/16	11⅛	9¾	10½	4⅞	4⅛	1	2 5/16	2½	¼ × ⅛	2¼	4⅝	4½	4½	½ × ¼
11	14½	22	9⅝	6½	3	7	6¼	11⅜	8⅝	¾	13/16	3/16	13½	7 11/16	8 3/16	12½	15 1/16	12⅜	10½	12	4⅞	4⅛	1	2 5/16	2½	¼ × ⅛	2½	5⅛	5	5	⅝ × 5/16
12	17½	25	11¼	7	3	8	7½	12½	10	1	1 1/16	3/16	15¾	8¾	9½	13 11/16	16¼	14⅛	11¾	13½	4⅞	4⅛	1	2 5/16	2½	¼ × ⅛	2¾	5⅝	5½	5½	⅝ × 3/16
13	19	27	12	7⅝	3	9	8	13½	10½	1	1 1/16	5/16	17¼	9½	10¼	14 7/16	17	16⅜	13½	15	4⅞	4⅛	1	2 5/16	2½	¼ × ⅛	3	6⅛	6	6	¾ × ⅜
14	22½	30	13	8⅛	3	10	9¾	15½	11½	1¼	1 5/16	¼	20	10	11¾	16½	19 1/16	18⅜	15	16½	4⅞	4⅝	1	2 5/16	2½	¼ × ⅛	3¼	6⅝	6½	6½	¾ × ⅜

*Shaft diameter tolerances +.000 —.001. For construction purposes send for Certified Dimension Sheets.

PARTS LIST:

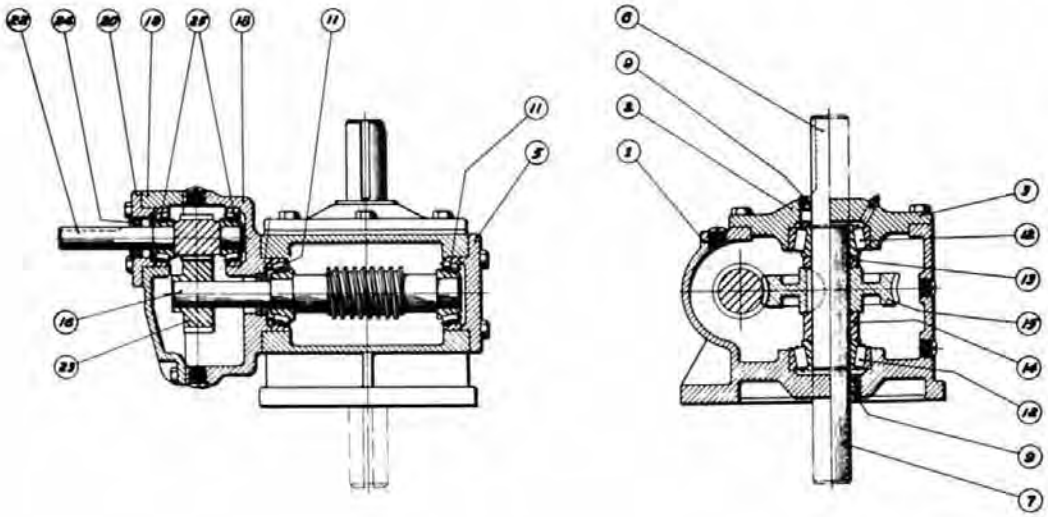

PARTS INDEX

Part No.	Description
1	Housing
2	Slow Speed Cover — Open
3	Slow Speed Cover — Closed
5	Intermediate Cover — Closed
5A	Intermediate Adapter — Not Shown Used With Inter. Cover Closed Units 10 Thru 14 Incl.
6	Slow Speed Shaft — Top Extension
7	Slow Speed Shaft — Bottom Extension
9	Oil Seal — S. S. Shaft — Top Extension
*11	Roller Bearing — Intermediate Speed
12	Roller Bearing — Slow Speed
13	Slow Speed Spacer — Short
14	Slow Speed Spacer — Long
15	Slow Speed Worm Gear — Bronze
16	Intermediate Speed Worm and Shaft Integral
18	High Speed Attachment Housing } Sold as set only.
19	High Speed Attachment Housing Cover } Sold as set only.
20	High Speed Cover — Open
22	High Speed Pinion and Shaft Integral
23	Intermediate Helical Gear
24	Oil Seal — High Speed
25	Roller Bearing — High Speed
26	Intermediate Speed Lock Nut — Not Shown Used On Units 10 Thru 14 Incl.

* Series 5 Thru 9 Incl. Use 2 Single Row Bearings. Series 10 Thru 14 Incl. Use 1 Single Row and 1 Double Row Bearing.

SHAFT ARRANGEMENTS:

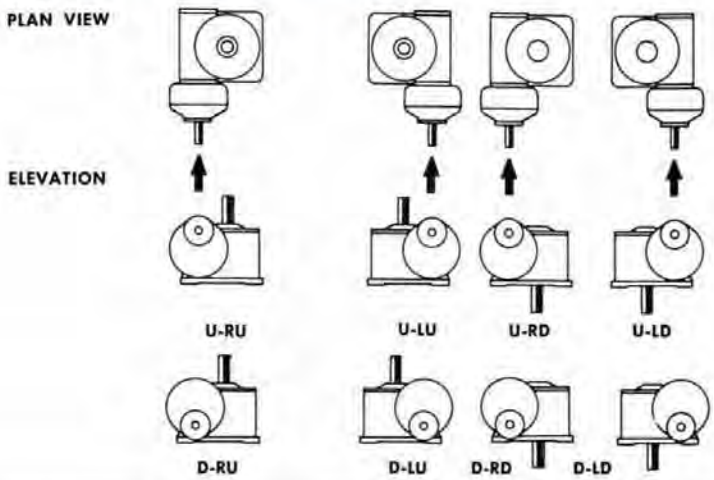

(A) The reducer is viewed looking at the High Speed Shaft which has a single extension only.

(B) No extra charge for above assemblies provided the shaft extensions are of standard length.

(C) Input shaft may be rotated in either direction.

(D) Units may be mounted in any position, (ceiling, sidewall, etc.), if specified when ordered.

(E) Helical housing can be rotated in four separate positions—if desired arrangement is not shown, consult factory.

double reduction parallel shafts

SERIES DBI

WORM GEAR TYPE — 9 SIZES .04 H.P. to 8.75 H.P.
RATIO RANGE 25:1 to 3850:1
MAX. OUTPUT TORQUE RANGE 146 to 34,290 in. lbs.

TABLE OF WEIGHTS

Unit	1	2	3	4	4½	5	6	8	9
Net Weight	12	19	44	63	72	90	195	238	760

Alloy steel slow speed shafts available.

DIMENSIONS:

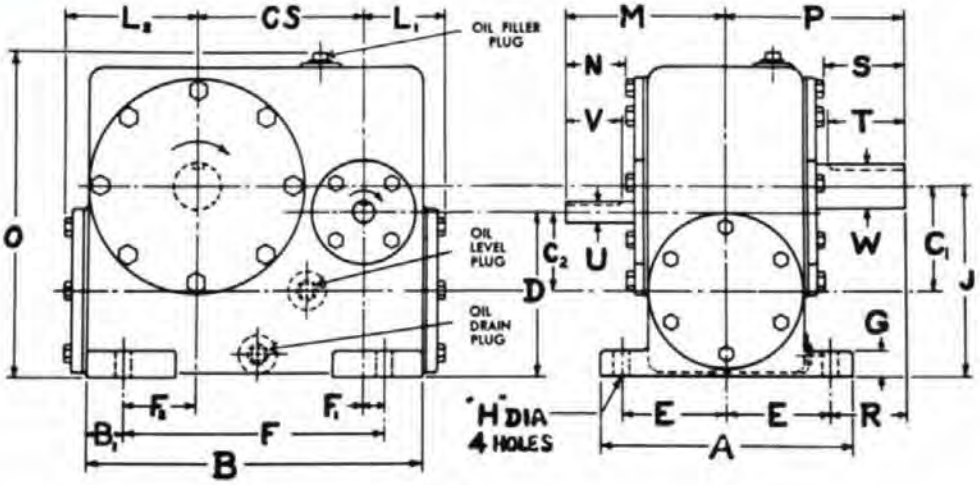

SPEED REDUCER DIMENSIONS (in inches)

Unit	A	B	B_1	C_1	C_2	CS	D	E	F	F_1	F_2	G	H	J	L_1	L_2	M	O	P	R	High Speed Shaft U*	N	V	Keyway	Slow Speed Shaft W*	S	T	Keyway
1	3¾	5¾	⅜	1.333	1.333	1¾	3¼	1½	5	1⅜	1⅝	5/16	11/32	3¼	1 15/16	1 15/16	4	5⅛	4	2½	½	2	1⅞	⅛ × 1/16	⅝	2	1⅞	3/16 × 3/32
2	4½	7¾	⅜	1⅝	1⅝	2¼	3 7/16	1¾	7	2 3/16	2 9/16	9/16	21/64	3 7/16	2 7/16	2 13/16	4⅜	5½	4⅜	2⅝	½	2 1/16	2	⅛ × 1/16	¾	2	1 11/16	3/16 × 3/32
3	5	9¼	½	2¼	2¼	3	5	2	8¼	1⅞	3⅜	½	13/32	5	1 13/16	3 5/16	6¼	8 7/16	5¾	3¾	⅝	3 3/16	2¾	3/16 × 3/32	1	2 5/16	2¼	¼ × ⅛
4	7¾	9½	⅝	2⅝	2⅝	4½	5½	3¼	8¼	1⅛	2⅝	9/16	17/32	5½	2⅜	3⅞	6⅜	9¼	5 13/16	2 9/16	¾	3	2⅞	3/16 × 3/32	1	2 5/16	2¼	¼ × ⅛
4½	7¾	10¼	¾	3	2⅝	4½	5⅝	3¼	8¾	1¼	3	⅝	17/32	6	2⅝	4⅜	6⅜	10¼	6 5/16	3 1/16	¾	3	2⅞	3/16 × 3/32	1¼	2¾	2½	¼ × ⅛
5	8½	11½	1 5/16	3½	2⅝	5⅝	5½	3½	8⅞	¾	2½	11/16	17/32	6⅜	2⅝	4⅜	6⅜	11⅛	6	2½	¾	3	2⅞	3/16 × 3/32	1½	2⅝	2¼	⅜ × 3/16
6	11½	15⅛	1¾	5.167	3½	7⅜	7½	4¾	11⅝	⅝	3⅝	1	19/32	9.167	3⅛	6⅛	8½	16	7 13/16	3 1/16	1	3 13/16	3¾	¼ × ⅛	2	3¼	3⅛	½ × ¼
8	11½	17⅜	1⅜	6½	3½	8 3/16	7½	4¾	14⅛	⅞	5 1/16	1	19/32	10½	3⅛	7 5/16	8½	17¾	8 5/16	3 13/16	1	3 13/16	3¾	¼ × ⅛	2½	3⅞	3¾	⅝ × 5/16
9	20	26 5/16	3¾	8⅛	5⅛	14¾	11.106	7¾	19 1/16	—	5 1/16	1¾	1 1/16	14 1/16	3 13/16	9⅝	10⅛	23⅜	13¾	6	1	3¾	3¾	¼ × ⅛	3¼	7¼	7⅛	¾ × ⅜

*Shaft diameter tolerance +.000 —.001. For construction purposes send for Certified Dimension Sheets.

PARTS LIST:

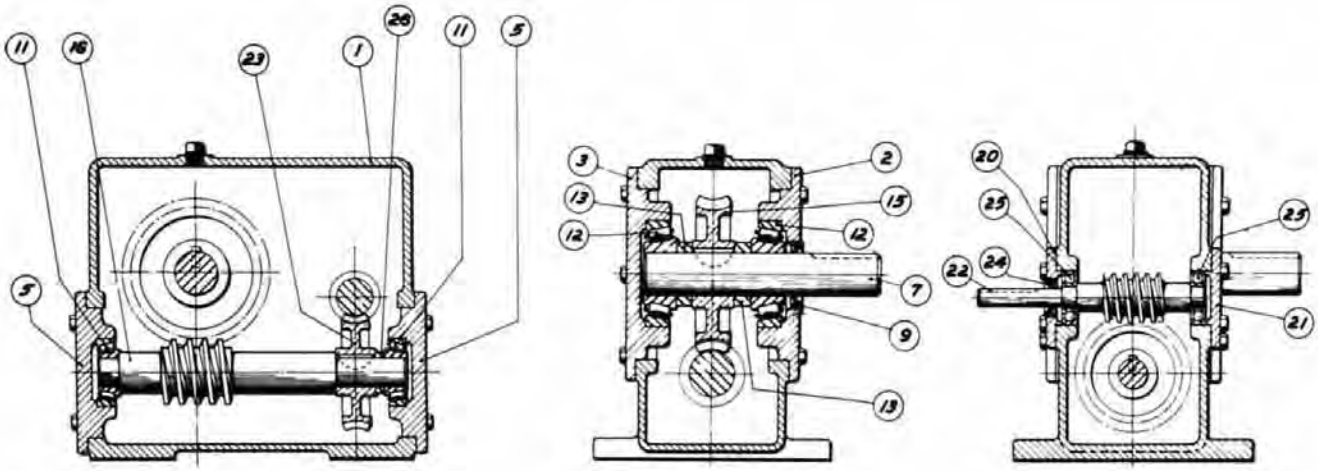

PARTS INDEX

Part No.	Description	Part. No.	Description
1	Housing	15	Slow Speed Worm Gear — Bronze
2	Slow Speed Cover — Open	16	Intermediate Speed Worm and Shaft Integral
3	Slow Speed Cover — Closed	20	High Speed Cover — Open
5	Intermediate Speed Cover	21	High Speed Cover — Closed
7	Slow Speed Shaft	22	High Speed Worm and Shaft Integral
9	Oil Seal — Slow Speed	23	High Speed Worm Gear — Bronze
11	Roller Bearing — Intermediate Speed	24	Oil Seal — High Speed
12	Roller Bearing — Slow Speed	25	Ball Bearing — High Speed
13	Slow Speed Spacer	26	Intermediate Speed Spacer

3

SHAFT ARRANGEMENTS:

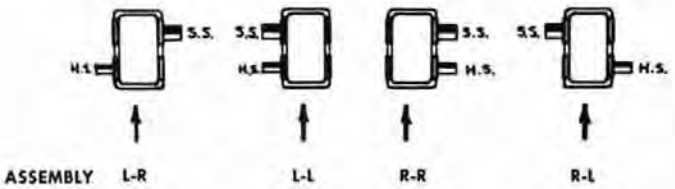

(A) The reducer is viewed from the side nearest to and at right angles to the high speed shaft.

(B) No extra charge for the above assemblies provided the shaft extensions are of standard length.

(C) The input shaft may be driven in either direction.

(D) Units may be mounted in any position, (ceiling, sidewall, etc.), if specified when ordered.

double reduction—hollow shaft

SERIES: SFD

GEAR RATIOS AVAILABLE 50:1 THRU 3600:1
COMPLETE TORQUE AND HP RATINGS ..... PAGES 152-222
OVERHUNG LOAD RATINGS ..... PAGES 153-223
SERVICE FACTORS ..... PAGE 230
COUPLING ADAPTERS ..... PAGE 120
HYDRAULIC MOTOR ADAPTERS ..... PAGE 116

SFD

TABLE OF WEIGHTS

Unit	3	4	5	6	7	8	9	10	12
Net Weight	27	43	73	82	143	156	245	265	400

Also available with foot mounted housing #CB - CT type, consult factory.

Additional Series Available: Series SFT (Triple Reduction) and SFX (Double Reduction-Helical and Worm).

For SFT and SFX output and intermediate stage dimensions, see SFD dimensions below.

For SFT and SFX input stage dimensions, see CTT page 104 and CTX page 86 respectively.

For construction purposes send for certified dimension sheets.

DIMENSIONS:

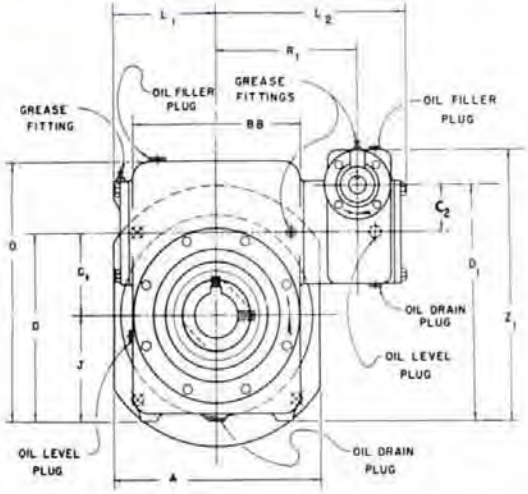

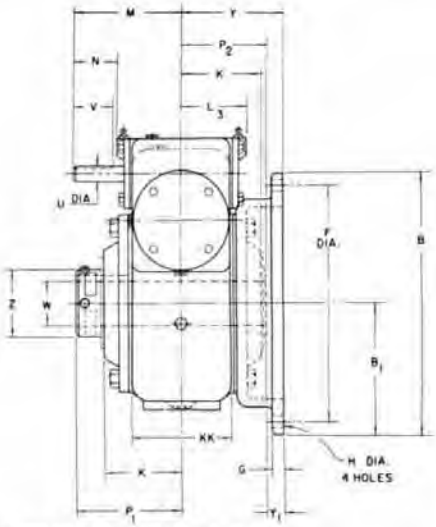

Unit	High Speed Shaft			
	U*	N	V	Keyway
3 SFD	1/2	1 11/16	1 1/2	1/8 x 1/16
4 SFD	1/2	1 11/16	1 1/2	1/8 x 1/16
5 SFD	5/8	1 7/8	1 3/4	3/16 x 3/32
6 SFD	5/8	1 7/8	1 3/4	3/16 x 3/32
7 SFD	3/4	2 1/16	2	3/16 x 3/32
8 SFD	3/4	2 1/16	2	3/16 x 3/32
9 SFD	3/4	2 1/16	2	3/16 x 3/32
10 SFD	7/8	2 5/16	2 1/4	3/16 x 3/32
12 SFD	1	2 7/16	2 1/2	1/4 x 1/8

SPEED REDUCER DIMENSIONS (in inches) Refer to D Line for these sizes.

Unit	A	B	B_1	BB	C_1	C_2	D	D_1	F dia	G	H	J	K	KK	L_1	L_2	L_3	M	O	P_1	P_2	R_1	Y	Y_1	Z	Z_1
3 SFD	5 3/4	7 3/8	3 11/16	4 5/16	2	1.33	4 5/8	5.958	6 1/2	3/8	13/32	2 5/8	2 5/8	3	2 7/8	5 15/16	2 7/16	4 1/8	6 1/4	3 3/8	2 7/8	4	3 3/8	1/2	1 3/4	7 1/2
4 SFD	7 3/4	8 7/8	4 7/16	6 1/8	2 5/8	1.33	6 1/8	7.458	8	3/8	13/32	3 1/2	2 13/16	3 1/4	3 15/16	6 13/16	2 7/16	4 1/8	8 3/8	3 11/16	3	5	3 5/8	5/8	2 1/4	9
5 SFD	8	10 1/2	5 1/4	6 3/4	3	2	7	9	9 1/4	1/2	9/16	4	3	4	4 3/16	7 15/16	2 7/8	4 3/4	9 5/8	4 1/16	3 9/16	5 3/4	5	1 13/16	2 11/16	10 11/16
6 SFD	9	11	5 1/2	7 1/2	3 1/2	2	8	10	10	1/2	9/16	4 1/2	3 3/8	4 3/8	4 5/8	8 7/16	2 7/8	4 3/4	11	4 7/16	3 9/16	6 1/4	4 1/2	15/16	2 7/8	11 11/16
7 SFD	10 1/2	13	6 1/2	9 3/16	4	2 5/8	9	11 5/8	11 1/2	5/8	11/16	5	3 5/8	5	5 1/2	9 11/16	3 15/16	6	13	4 13/16	3 13/16	7 1/4	5 3/4	1 15/16	3 5/8	14 3/16
8 SFD	12 1/4	14 1/4	7 1/8	10 5/8	4.6	2 5/8	10.1	12.725	13	5/8	11/16	5 1/2	4 5/8	6 1/8	6 1/4	10 11/16	3 15/16	6	14 1/2	5 13/16	4 13/16	8 1/4	5 3/4	15/16	4 1/4	15 3/16
9 SFD	12 1/2	15 1/2	7 3/4	11 11/16	5.167	2 5/8	11.167	13.792	14	3/4	11/16	6	4 5/8	5 1/2	6 3/4	11 3/16	3 15/16	6	14 3/4	5 13/16	4 15/16	8 3/4	7	2 1/16	5 3/8	16 1/4
10 SFD	14 1/4	17 3/4	8 7/8	12 7/8	6	3	13	16	16	3/4	13/16	7	5 1/8	6 5/16	8 1/16	12 5/16	4 3/16	6 1/2	18 1/2	6 5/16	5 7/16	9 1/2	8	2 9/16	5 3/8	18 3/4
12 SFD	16 1/2	21 1/4	10 5/8	15 3/4	7	3 1/2	15 1/2	19	19	1	1 1/16	8 1/2	6 1/8	7 1/2	9 1/2	14 9/16	4 5/8	7 1/16	21 1/2	7 5/16	6 7/16	11 1/2	8	1 9/16	6 1/2	22 3/16

double reduction hollow shaft

PARTS LIST:

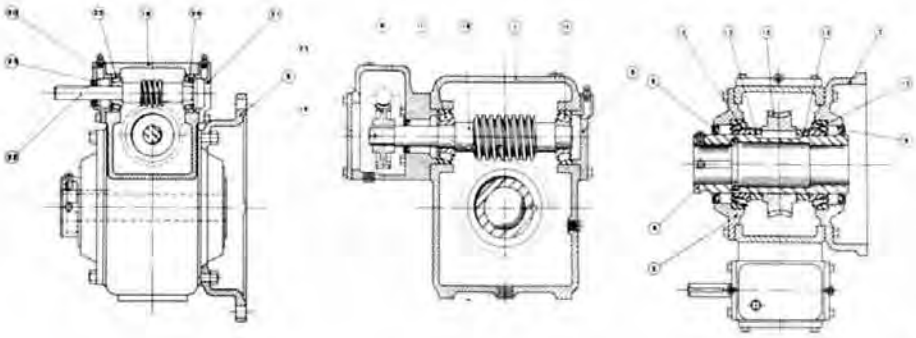

PARTS INDEX

Part No.	Description
1	Housing
2	Slow Speed Cover
3	Slow Speed Cover and Base
5	Intermediate Cap—Closed
5A	Intermediate Adapter—Not Shown—Used with Inter Cover Closed—Units 10 and 12
6	Slow Speed Shaft—Hollow
8	Oil Seal—Intermediate Shaft
9	Oil Seal—Slow Speed
*11	Roller Bearings—Intermediate Speed
12	Roller Bearings—Slow Speed
13	Slow Speed Spacer (Not Used on 3SFD or 7 SFD)
15	Slow Speed Worm Gear—Bronze
16	Intermediate Speed Worm And Shaft Integral
18	High Speed Attachment Housing
19	High Speed Attachment Housing Cover
20	High Speed Cap—Open
21	High Speed Cap—Closed
22	High Speed Worm and Shaft Integral
23	High Speed Worm Gear—Bronze
24	Oil Seal—High Speed
25	Roller Bearing—High Speed
26	Intermediate Locknut—Not Shown—Used on Units 10 and 12

*Series 3 thru 9 uses 2 Single Row Bearings. Series 10 and 12 Uses 1 Single and 1 Double Row Bearing.

DIMENSIONS: SLOW SPEED SHAFT BORES (in inches)

3 SFD			4 SFD			5 SFD			6 SFD			7 SFD			8 SFD		
W‡	Keyway	Length	W‡	Keyway	Length	W‡	Keyway	Length	W‡	Keyway	Length	W‡	Keyway	Length	W‡	Keyway	Length
3/4	3/16x3/32	6 1/4	15/16	1/4x1/8	6 11/16	1 3/16	1/4x1/8	7 1/4	1 3/16	1/4x1/8	8	1 5/8	3/8x3/16	8 1/2	1 11/16	3/8x3/16	10 1/2
13/16	3/16x3/32	6 1/4	1	1/4x1/8	6 11/16	1 1/4	1/4x1/8	7 1/4	1 1/4	1/4x1/8	8	1 11/16	3/8x3/16	8 1/2	1 3/4	3/8x3/16	10 1/2
7/8	3/16x3/32	6 1/4	1 1/16	1/4x1/8	6 11/16	1 3/8	5/16x5/32	7 1/4	1 3/8	5/16x5/32	8	1 3/4	3/8x3/16	8 1/2	1 7/8	1/2x1/4	10 1/2
15/16	1/4x1/8	6 1/4	1 1/8	1/4x1/8	6 11/16	1 7/16	3/8x3/16	7 1/4	1 7/16	3/8x3/16	8	1 7/8	1/2x1/4	8 1/2	1 15/16	1/2x1/4	10 1/2
1	1/4x1/8	6 1/4	1 3/16	1/4x1/8	6 11/16	1 1/2	3/8x3/16	7 1/4	1 1/2	3/8x3/16	8	1 15/16	1/2x1/4	8 1/2	2	1/2x1/4	10 1/2
1 1/16	1/4x1/8	6 1/4	1 1/4	1/4x1/8	6 11/16	1 5/8	3/8x3/16	7 1/4	1 5/8	3/8x3/16	8	2	1/2x1/4	8 1/2	2 3/16	1/2x1/4	10 1/2
1 1/8	1/4x1/8	6 1/4	1 3/8	5/16x5/32	6 11/16	1 11/16	3/8x3/16	7 1/4	1 11/16	3/8x3/16	8	2 3/16	1/2x1/4	8 1/2	2 1/4	1/2x1/4	10 1/2
1 3/16	1/4x1/8	6 1/4	1 7/16	3/8x3/16	6 11/16	1 3/4	3/8x3/16	7 1/4	1 3/4	3/8x3/16	8	2 1/4	1/2x1/4	8 1/2	2 7/16	5/8x5/16	10 1/2
1 1/4	1/4x1/8	6 1/4	1 1/2	3/8x3/16	6 11/16	1 7/8	1/2x3/16	7 1/4	1 7/8	1/2x1/4	8	2 7/16	5/8x7/32	8 1/2	2 1/2	5/8x5/16	10 1/2
			1 5/8	3/8x1/8	6 11/16				1 15/16	1/2x1/4	8				2 11/16	5/8x5/16	10 1/2
			1 11/16	3/8x1/8	6 11/16				2	1/2x1/4	8				2 3/4	5/8x5/16	10 1/2
									2 3/16	1/2x1/8	8				2 15/16	3/4x1/4	10 1/2
															3	3/4x1/4	10 1/2

9 SFD			10 SFD			12 SFD		
W‡	Keyway	Length	W‡	Keyway	Length	W‡	Keyway	Length
2 3/16	1/2x1/4	10 3/4	2 3/16	1/2x1/4	11 3/4	2 11/16	5/8x5/16	13 3/4
2 1/4	1/2x1/4	10 3/4	2 1/4	1/2x1/4	11 3/4	2 3/4	5/8x5/16	13 3/4
2 7/16	5/8x5/16	10 3/4	2 7/16	5/8x5/16	11 3/4	2 15/16	3/4x3/8	13 3/4
2 1/2	5/8x5/16	10 3/4	2 1/2	5/8x5/16	11 3/4	3	3/4x3/8	13 3/4
2 11/16	5/8x5/16	10 3/4	2 11/16	5/8x5/16	11 3/4	3 3/16	3/4x3/8	13 3/4
2 3/4	5/8x5/16	10 3/4	2 3/4	5/8x5/16	11 3/4	3 7/16	7/8x7/16	13 3/4
2 15/16	3/4x3/8	10 3/4	2 15/16	3/4x3/8	11 3/4	3 15/16	1x1/2	13 3/4
3	3/4x3/8	10 3/4	3	3/4x3/8	11 3/4	4 3/16	1x1/2	13 3/4
3 3/16	3/4x3/8	10 3/4	3 3/16	3/4x3/8	11 3/4	4 7/16	1x1/2	13 3/4
3 7/16	7/8x7/16	10 3/4	3 7/16	7/8x7/16	11 3/4			

‡ Bore Tolerances + .000, + .002.

For improved availability, specify bore sizes shown in bold type (super standards) whenever possible. Some bore sizes may require a premium. See price list for details.

SHAFT ARRANGEMENTS:

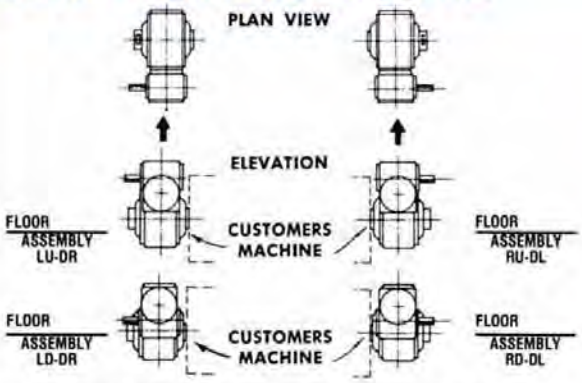

(A) Reducer viewed looking at the attachment housing.
(B) No extra charge for the illustrated assemblies provided shaft extensions are standard.
(C) The input shaft may be driven in either direction.
NOTE: Standard mounting position is exactly as shown. If motor is to be oriented in any other position, so state on order.

WINSMITH

double reduction—hollow shaft

SERIES: STD

GEAR RATIOS AVAILABLE 50:1 THRU 3600:1
COMPLETE TORQUE AND HP RATINGS ..... PAGES 152-222
OVERHUNG LOAD RATINGS .....PAGES 153-223
SERVICE FACTORS ..... PAGE 230
COUPLING ADAPTERS ..... PAGE 120
HYDRAULIC MOTOR ADAPTERS ..... PAGE 116

STD

STT

SCTX

Additional Series Available: Series STT (Triple Reduction) and STX (Double Reduction-Helical and Worm) see picture inset.

For STT and SCTX output and intermediate stage dimensions, see STD dimensions below.

For STT and SCTX input stage dimensions, see CTT page 104 and CTX page 84 respectively.

For construction purposes send for certified dimension sheets.

TABLE OF WEIGHTS

Unit	3	4	5	6	7	8	9	10	12
Net Weight	27	43	73	82	143	156	245	265	400

Also available with foot mounted housing #CB - CT type, consult factory.

DIMENSIONS:

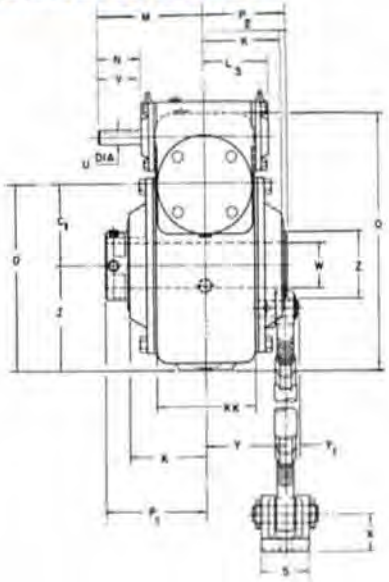

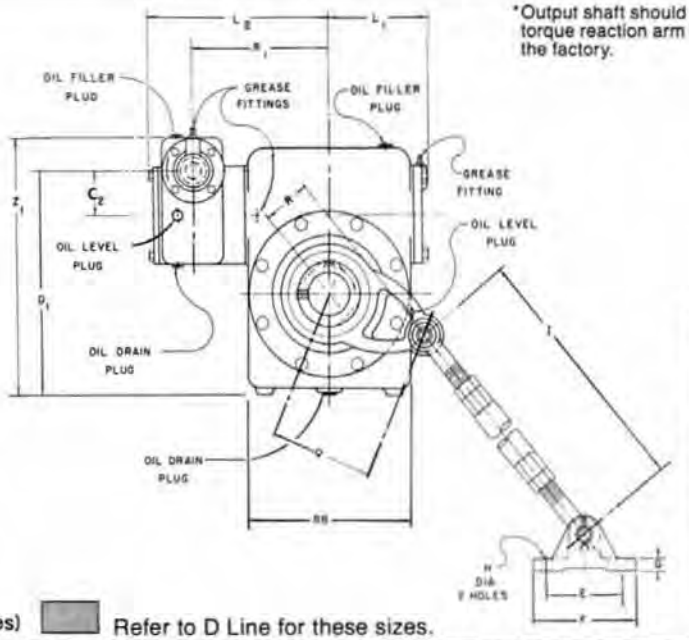

*Output shaft should rotate in a direction that keeps the torque reaction arm in tension. If otherwise, contact the factory.

High Speed Shaft

Unit	U*	N	V	Keyway
3 STD	1/2	1 11/16	1 1/2	1/8 x 1/16
4 STD	1/2	1 11/16	1 1/2	1/8 x 1/16
5 STD	5/8	1 7/8	1 3/4	3/16 x 3/32
6 STD	5/8	1 7/8	1 3/4	3/16 x 3/32
7 STD	3/4	2 1/16	2	3/16 x 3/32
8 STD	3/4	2 1/16	2	3/16 x 3/32
9 STD	3/4	2 1/16	2	3/16 x 3/32
10 STD	7/8	2 5/16	2 1/4	3/16 x 3/32
12 STD	1	2 7/16	2 1/2	1/4 x 1/8

SPEED REDUCER DIMENSIONS (in inches) Refer to D Line for these sizes.

Unit	BB	C_1	C_2	D	D_1	E	F	G	H	I max	I min	J	K	KK	L_1	L_2	L_3	M	O	P_1	P_2	Q	Rmin	R_1	S	X	Y	Y_1	Z	Z_1
3 STD	4 5/16	2	1.33	4 3/8	5.958	2 7/8	3 3/4	3/8	11/32	20	14	2 5/8	2 5/8	3	2 7/8	5 15/16	2 7/16	4 1/8	6 1/4	3 3/8	2 7/8	3	2 1/2	4	1 1/2	1 1/8	2 3/8	3/8	1 3/4	7 1/2
4 STD	6 1/8	2 5/8	1.33	6 1/8	7.458	3	4	3/8	13/32	23 1/2	18	3 1/2	2 13/16	3 1/4	3 15/16	6 15/16	2 7/16	4 1/8	8 3/8	3 11/16	3	3 3/4	3	5	1 3/4	1 3/8	2 11/16	1/2	2 1/4	9
5 STD	6 3/4	3	2	7	9	3	4	3/8	13/32	23 1/2	18	4	3	4	4 3/16	7 15/16	2 7/8	4 3/4	9 5/8	4 1/16	3 5/16	4 1/4	3 1/2	5 3/4	1 3/4	1 3/8	3 5/16	1/2	2 11/16	10 11/16
6 STD	7 1/2	3 1/2	2	8	10	3 1/2	4 3/4	5/16	17/32	29	21	4 1/2	3 3/8	4 3/8	4 5/8	8 7/16	2 7/8	4 3/4	11	4 7/16	3 5/16	4 3/4	4	6 1/4	2 1/8	1 5/8	3 1/2	3/8	2 7/8	11 11/16
7 STD	9 3/16	4	2 5/8	9	11 5/8	3 1/2	4 3/4	5/16	17/32	29	21	5	3 5/8	5	5 1/2	9 11/16	3 15/16	6	13	4 11/16	3 13/16	5 1/2	4 1/2	7 1/4	2 1/8	1 5/8	3 5/8	5/8	3 5/8	14 1/16
8 STD	10 5/8	4.6	2 5/8	10.1	12.725	3 1/2	4 3/4	5/16	17/32	29	21	5 1/2	4 5/8	6 1/8	6 1/4	10 11/16	3 15/16	6	14 1/2	5 11/16	4 13/16	6 1/8	5	8 1/4	2 1/8	1 5/8	4 7/16	5/8	4 1/4	15 3/16
9 STD	11 11/16	5.167	2 5/8	11.167	13.792	5	6 3/4	3/4	13/16	31	22	6	4 5/8	5 1/2	6 3/4	11 3/16	3 15/16	6	14 3/4	5 13/16	4 15/16	6 3/4	5 1/2	8 3/4	2 1/16	1 15/16	4 5/16	11/16	5 3/8	16 1/4
10 STD	12 7/8	6	3	13	16	5	6 3/4	3/4	13/16	31	22	7	5 1/8	6 5/16	8 1/16	12 5/16	4 3/16	6 1/2	18 1/2	6 5/16	5 7/16	8	6	9 1/2	2 1/16	1 15/16	4 1/2	1 11/32	5 3/8	18 3/4
12 STD	15 3/4	7	3 1/2	15 1/2	19	5 3/4	7 3/4	7/8	15/16	37 1/2	26 1/2	8 1/2	6 1/8	7 1/2	9 1/2	14 9/16	4 5/8	7 1/16	21 1/2	7 5/16	6 7/16	9 13/16	7	11 1/2	2 11/16	2 3/8	5 13/32	1 21/32	6 1/2	22 3/16

double reduction hollow shaft

PARTS LIST:

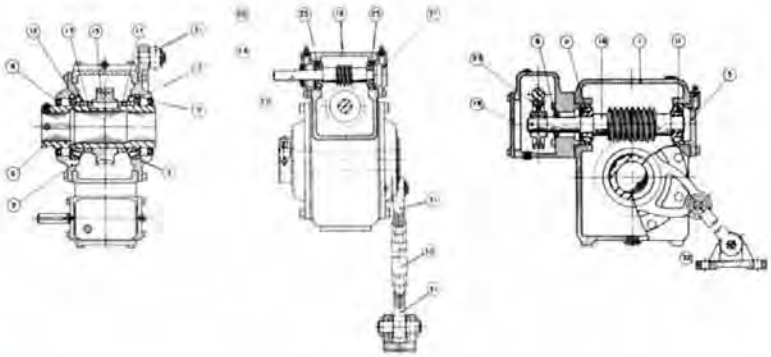

PARTS INDEX

Part No.	Description
1	Housing
2	Slow Speed Cover — Open
3	Slow Speed Cover — Closed — Not Shown
5	Intermediate Cover — Closed
5A	Intermediate Adapter — Not Shown — Used With Inter. Cover — Closed — Units 10 Thru 14 Incl.
6	Slow Speed Shaft — Double Extension
7	Slow Speed Shaft — Single Extension — Not Shown
8	Oil Seal — Intermediate Speed
9	Oil Seal — Slow Speed
*11	Roller Bearing — Intermediate Speed
12	Roller Bearing — Slow Speed
13	Slow Speed Spacer (Not used on **3 STD** or **7 STD**)
15	Slow Speed Worm Gear — Bronze
16	Intermediate Speed Worm and Shaft Integral
18	High Speed Attachment Housing
19	High Speed Attachment Housing Cover
20	High Speed Cover — Open
21	High Speed Cover — Closed
22	High Speed Worm and Shaft Integral
23	High Speed Worm Gear — Bronze
24	Oil Seal — High Speed
25	Roller Bearing — High Speed
30	Torque Arm Turnbuckle
31	Torque Arm Rod End — Right Hand & Left Hand
32	Floor Support

*Series 3 thru 9 uses 2 Single Row Bearings. Series 10 and 12 use 1 Single and 1 Double Row Bearing.

DIMENSIONS: SLOW SPEED SHAFT BORES (in inches)

3 STD			4 STD			5 STD			6 STD			7 STD			8 STD		
W‡	Keyway	Length	W‡	Keyway	Length	W‡	Keyway	Length	W‡	Keyway	Length	W‡	Keyway	Length	W‡	Keyway	Length
3/4	3/16x3/32	6 1/4	15/16	1/4x1/8	6 11/16	1 3/16	1/4x1/8	7 1/4	1 3/16	1/4x1/8	8	1 5/8	3/8x3/16	8 1/2	1 11/16	3/8x3/16	10 1/2
13/16	3/16x3/32	6 1/4	**1**	1/4x1/8	6 11/16	1 1/4	1/4x1/8	7 1/4	**1 1/4**	1/4x1/8	8	1 11/16	3/8x3/16	8 1/2	**1 3/4**	3/8x3/16	10 1/2
7/8	3/16x3/32	6 1/4	1 1/16	1/4x1/8	6 11/16	1 3/8	5/16x5/32	7 1/4	**1 3/8**	5/16x5/32	8	1 3/4	3/8x3/16	8 1/2	1 7/8	1/2x1/4	10 1/2
15/16	1/4x1/8	6 1/4	1 1/8	1/4x1/8	6 11/16	1 7/16	3/8x3/16	7 1/4	**1 7/16**	3/8x3/16	8	1 7/8	1/2x1/4	8 1/2	**1 15/16**	1/2x1/4	10 1/2
1	1/4x1/8	6 1/4	1 3/16	1/4x1/8	6 11/16	**1 1/2**	3/8x3/16	7 1/4	**1 1/2**	3/8x3/16	8	1 15/16	1/2x1/4	8 1/2	**2**	1/2x1/4	10 1/2
1 1/16	1/4x1/8	6 1/4	**1 1/4**	1/4x1/8	6 11/16	**1 5/8**	3/8x3/16	7 1/4	1 5/8	3/8x3/16	8	2	1/2x1/4	8 1/2	**2 3/16**	1/2x1/4	10 1/2
1 1/8	1/4x1/8	6 1/4	1 3/8	5/16x5/32	6 11/16	1 11/16	3/8x3/16	7 1/4	1 11/16	3/8x3/16	8	**2 3/16**	1/2x1/4	8 1/2	2 1/4	1/2x1/4	10 1/2
1 3/16	1/4x1/8	6 1/4	1 7/16	3/8x3/16	6 11/16	**1 3/4**	3/8x3/16	7 1/4	**1 3/4**	3/8x3/16	8	2 1/4	1/2x1/4	8 1/2	**2 7/16**	5/8x5/16	10 1/2
1 1/4	1/4x1/8	6 1/4	**1 1/2**	3/8x3/16	6 11/16	**1 7/8**	1/2x3/16	7 1/4	1 7/8	1/2x1/4	8	**2 7/16**	5/8x7/32	8 1/2	**2 1/2**	5/8x5/16	10 1/2
			1 5/8	3/8x1/8	6 11/16				**1 15/16**	1/2x1/4	8				2 11/16	5/8x5/16	10 1/2
			1 11/16	3/8x1/8	6 11/16				**2**	1/2x1/4	8				2 3/4	5/8x5/16	10 1/2
									2 3/16	1/2x1/8	8				**2 15/16**	3/4x1/4	10 1/2
															3	3/4x1/4	10 1/2

9 STD			10 STD			12 STD		
W‡	Keyway	Length	W‡	Keyway	Length	W‡	Keyway	Length
2 3/16	1/2x1/4	10 3/4	**2 3/16**	1/2x1/4	11 3/4	2 11/16	5/8x5/16	13 3/4
2 1/4	1/2x1/4	10 3/4	2 1/4	1/2x1/4	11 3/4	2 3/4	5/8x5/16	13 3/4
2 7/16	5/8x5/16	10 3/4	**2 7/16**	5/8x5/16	11 3/4	2 15/16	3/4x3/8	13 3/4
2 1/2	5/8x5/16	10 3/4	2 1/2	5/8x5/16	11 3/4	**3**	3/4x3/8	13 3/4
2 11/16	5/8x5/16	10 3/4	**2 11/16**	5/8x5/16	11 3/4	3 3/16	3/4x3/8	13 3/4
2 3/4	5/8x5/16	10 3/4	**2 3/4**	5/8x5/16	11 3/4	**3 7/16**	7/8x7/16	13 3/4
2 15/16	3/4x3/8	10 3/4	**2 15/16**	3/4x3/8	11 3/4	3 15/16	1x1/2	13 3/4
3	3/4x3/8	10 3/4	**3**	3/4x3/8	11 3/4	4 3/16	1x1/2	13 3/4
3 3/16	3/4x3/8	10 3/4	3 3/16	3/4x3/8	11 3/4	4 7/16	1x1/2	13 3/4
3 7/16	7/8x7/16	10 3/4	**3 7/16**	7/8x7/16	11 3/4			

‡ Bore Tolerances + .000, + .002.

For improved availability, specify bore sizes shown in bold type (super standards) whenever possible. Some bore sizes may require a premium. See price list for details.

SHAFT ARRANGEMENTS:

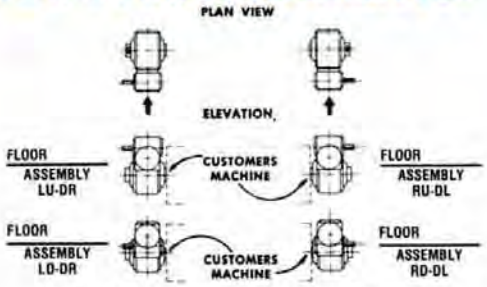

(A) The reducer viewed looking at the attachment housing.
(B) No extra charge for the illustrated assemblies provided shaft extensions are standard.
(C) The input shaft may be driven in either direction.
NOTE: Standard mounting position is exactly as shown. If motor is to be oriented in any other position, so state on order.

WINSMITH

double reduction—hollow shaft—motorized and gearmotor

MSFT

MSFDW

SFDMW
See page 120.

SERIES: MSFD-MSFDW (WITH MOTOR)

GEAR RATIOS AVAILABLE 50:1 THRU 3600:1

COMPLETE TORQUE AND HP RATINGS ..... PAGES 152-222
OVERHUNG LOAD RATINGS .....PAGES 153-223
SERVICE FACTORS ..... PAGE 230
COUPLING ADAPTERS ..... PAGE 120
HYDRAULIC MOTOR ADAPTERS ..... PAGE 116

TABLE OF WEIGHTS

Unit	3	4	5	6	7	8	9	10	12
Net Weight	27	43	75	82	145	156	247	265	400

Hydraulic Motor Flanges available, see pages 116-118.

Units 3—10 & 12 available in "C" flange coupling type, see page 120.

Also available with foot mounted housing #CB - CT type, consult factory.

Additional Series Available: Series MSFT (Triple Reduction)

For MSFT output and intermediate stage dimensions, see MSFD dimensions below.

For MSFT input stage dimensions, see MCTT page 108.

For construction purposes send for certified dimension sheets.

DIMENSIONS: Dimensions apply to speed reducer only.

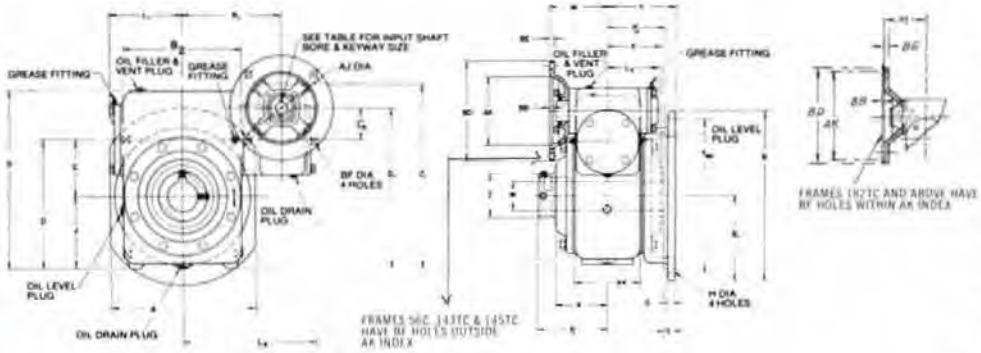

FRAME, KEYWAY and BORE DIMENSIONS

Frame No.	56C	143TC 145TC	182TC 184TC 213TCZ* 215TCZ*
AJ	5⅞	5⅞	7¼
AK	4½	4½	8½
BB	3/16	3/16	3/16
BD	6½	6½	9
BE	5/16	5/16	3/8
BF	13/32	13/32	17/32
Keyway	3/16 x 3/32	3/16 x 3/32	¼ x ⅛
Bore +.001 −.000	.6255	.8755	1.1255#

SPEED REDUCER DIMENSIONS (in inches) Refer to D Line for these sizes.

Unit	A	B	B_1	B_2	C_1	C_2	D	D_1	F dia	G	H	J	K	KK	L_1	L_2	L_3	M	O	P_1	P_2	R_1	Y	Y_1	Z	Z_1	Maximum Frame Size
3MSFD	5¼	7⅛	3 11/16	4 9/16	2	1.33	4⅝	5.958	6½	⅜	13/32	2⅝	2⅝	3	2⅞	5 15/16	3 9/16	3⅝	6¼	3⅝	2⅞	4	3⅜	½	1¾	7½	56C
4MSFD	7¼	8⅞	4 7/16	6⅛	2⅝	1.33	6⅛	7.458	8	⅝	13/32	3½	2 23/16	3¼	3 15/16	6 15/16	3 9/16	3⅝	8⅜	3 11/16	3	5	3⅝	⅜	2¼	9	56C
5MSFD	8	10½	5¼	6¾	3	2	7	9	9¼	½	9/16	4	3	4	4 3/16	7 15/16	3 9/16	3⅞	9⅝	4 1/16	3 9/16	5¾	5	1 13/16	2 11/16	10 11/16	145TC-184C
6MSFD	9	11	5½	7½	3½	2	8	10	10	½	9/16	4½	3⅜	4⅜	4⅝	8 7/16	3 9/16	3⅞	11	4 7/16	3 9/16	6¼	4½	15/16	2⅞	11 11/16	145TC-184C
7MSFD	10½	13	6½	9 3/16	4	2⅝	9	11⅝	11½	⅝	11/16	5	3⅝	5	5½	9 11/16	4¼	4½	13	4 11/16	3 13/16	7¼	5¾	1 15/16	3⅝	14 1/16	145TC-184C
8MSFD	12¼	14¼	7⅛	10⅝	4.6	2⅝	10.1	12.725	13	⅝	11/16	5½	4⅝	6⅛	6¼	10 11/16	4¼	4½	14½	5 11/16	4 13/16	8¼	5¾	15/16	4¼	15 11/16	145TC-184C
9MSFD	12½	15½	7¾	11 11/16	5.167	2⅝	11.167	13.792	14	¾	11/16	6	4⅝	5½	6¾	11 13/16	4¼	4½	14¾	5 13/16	4 15/16	8¾	7	2 1/16	5⅜	16¼	145TC-184C
10MSFD	14¼	17⅜	8⅞	12⅞	6	3	13	16	16	¾	13/16	7	5⅛	6 9/16	8 1/16	12 9/16	4½	5⅛	18½	6 9/16	5 7/16	9½	8	2 9/16	5⅜	18¾	184TC-215C
12MSFD	16½	21¼	10⅝	15¾	7	3½	15½	19	19	1	1 1/16	8½	6⅛	7½	9½	14 9/16	5	5½	21½	7 9/16	6 7/16	11½	8	1 9/16	6½	22 9/16	184TC-215C

MOTOR DIMENSIONS:

H.P. @ 1800 RPM	1/6		¼		⅓		½		¾		1	1½	2	3	5
Phase	Single *	Three	Single *	Three	Single *	Three	Single *	Three	Single *	Three	Three	Three	Three	Three	Three
AG	7½	7½	7¾	8¼	8¼	8¾	8¾	8¾	9¼	9¼	9¾	10¾	10¾	12¼	13¾
AP	5 21/32	5 21/32	5 21/32	5 21/32	6 31/64	6 31/64	6 31/64	6 31/64	6 31/64	6 31/64	6 31/64	6 31/64	6 31/64	10 11/32	10 11/32

*Single phase motor is capacitor start. Dimensions as shown are for open dripproof enclosure. Motors can be furnished open dripproof or enclosed.

double reduction
hollow shaft—motorized and gearmotor

PARTS LIST:

PARTS INDEX

Part No.	Description
1	Housing
2	Slow Speed Cover
3	Slow Speed Cover and Base
5	Intermediate Cap Closed
5A	Intermediate Adaptor — Not Shown — Used with Intermediate Cap Closed — Units 10 and 12
6	Slow Speed Shaft — Hollow
8	Oil Seal — Intermediate Shaft
9	Oil Seal — Slow Speed
*11	Roller Bearings — Intermediate Speed
12	Roller Bearings — Slow Speed
13	Slow Speed Spacer (Not Used on 3MSFD or 7MSFD)
15	Slow Speed Worm Gear — Bronze
16	Intermediate Speed Worm and Shaft Integral
18	High Speed Attachment Housing
19	High Speed Attachment Housing Cover
21	High Speed Cap — Closed
22	High Speed Worm and Shaft Integral
23	High Speed Worm Gear — Bronze
24	Oil Seal — High Speed
25	Roller Bearing — High Speed
26	High Speed Locknut
32	Motor Adapter
32B	Motor Adapter Spacer (Sizes 7, 8 & 9 only)
34	Intermediate Locknut — Not Shown — Used on Units 10 and 12
35	Intermediate Lockwasher — Not Shown — Used on Units 10 and 12

*Series 3 thru 9 Uses 2 Single Row Bearings. Series 10 and 12 Uses 1 Single and 1 Double Row Bearing.

DIMENSIONS: SLOW SPEED SHAFT BORES (in inches)

3 MSFD			4 MSFD			5 MSFD			6 MSFD			7 MSFD			8 MSFD		
W‡	Keyway	Length	W‡	Keyway	Length	W‡	Keyway	Length	W‡	Keyway	Length	W‡	Keyway	Length	W‡	Keyway	Length
3/4	3/16x3/32	6 1/4	15/16	1/4x1/8	6 11/16	1 3/16	1/4x1/8	7 1/4	1 3/16	1/4x1/8	8	1 5/8	3/8x3/16	8 1/2	1 11/16	3/8x3/16	10 1/2
13/16	3/16x3/32	6 1/4	**1**	1/4x1/8	6 11/16	1 1/4	1/4x1/8	7 1/4	**1 1/4**	1/4x1/8	8	1 11/16	3/8x3/16	8 1/2	**1 3/4**	3/8x3/16	10 1/2
7/8	3/16x3/32	6 1/4	1 1/16	1/4x1/8	6 11/16	1 3/8	5/16x5/32	7 1/4	**1 3/8**	5/16x5/32	8	1 3/4	3/8x3/16	8 1/2	1 7/8	1/2x1/4	10 1/2
15/16	1/4x1/8	6 1/4	1 1/8	1/4x1/8	6 11/16	1 7/16	3/8x3/16	7 1/4	**1 7/16**	3/8x3/16	8	1 7/8	1/2x1/4	8 1/2	**1 15/16**	1/2x1/4	10 1/2
1	1/4x1/8	6 1/4	1 3/16	1/4x1/8	6 11/16	**1 1/2**	3/8x3/16	7 1/4	**1 1/2**	3/8x3/16	8	1 15/16	1/2x1/4	8 1/2	**2**	1/2x1/4	10 1/2
1 1/16	1/4x1/8	6 1/4	**1 1/4**	1/4x1/8	6 11/16	**1 5/8**	3/8x3/16	7 1/4	1 5/8	3/8x3/16	8	2	1/2x1/4	8 1/2	**2 3/16**	1/2x1/4	10 1/2
1 1/8	1/4x1/8	6 1/4	1 3/8	5/16x5/32	6 11/16	1 11/16	3/8x3/16	7 1/4	1 11/16	3/8x3/16	8	**2 3/16**	1/2x1/4	8 1/2	2 1/4	1/2x1/4	10 1/2
1 3/16	1/4x1/8	6 1/4	1 7/16	3/8x3/16	6 11/16	**1 3/4**	3/8x3/16	7 1/4	**1 3/4**	3/8x3/16	8	2 1/4	1/2x1/4	8 1/2	**2 7/16**	5/8x5/16	10 1/2
1 1/4	1/4x1/8	6 1/4	**1 1/2**	3/8x3/16	6 11/16	**1 7/8**	1/2x3/16	7 1/4	1 7/8	1/2x1/4	8	**2 7/16**	5/8x7/32	8 1/2	**2 1/2**	5/8x5/16	10 1/2
			1 5/8	3/8x1/8	6 11/16				**1 15/16**	1/2x1/4	8				2 11/16	5/8x5/16	10 1/2
			1 11/16	3/8x1/8	6 11/16				**2**	1/2x1/4	8				2 3/4	5/8x5/16	10 1/2
									2 3/16	1/2x1/8	8				**2 15/16**	3/4x1/4	10 1/2
															3	3/4x1/4	10 1/2

9 MSFD			10 MSFD			12 MSFD		
W‡	Keyway	Length	W‡	Keyway	Length	W‡	Keyway	Length
2 3/16	1/2x1/4	10 3/4	**2 3/16**	1/2x1/4	11 3/4	2 11/16	5/8x5/16	13 3/4
2 1/4	1/2x1/4	10 3/4	2 1/4	1/2x1/4	11 3/4	2 3/4	5/8x5/16	13 3/4
2 7/16	5/8x5/16	10 3/4	**2 7/16**	5/8x5/16	11 3/4	2 15/16	3/4x3/8	13 3/4
2 1/2	5/8x5/16	10 3/4	2 1/2	5/8x5/16	11 3/4	**3**	3/4x3/8	13 3/4
2 11/16	5/8x5/16	10 3/4	**2 11/16**	5/8x5/16	11 3/4	3 3/16	3/4x3/8	13 3/4
2 3/4	5/8x5/16	10 3/4	**2 3/4**	5/8x5/16	11 3/4	**3 7/16**	7/8x7/16	13 3/4
2 15/16	3/4x3/8	10 3/4	**2 15/16**	3/4x3/8	11 3/4	3 15/16	1x1/2	13 3/4
3	3/4x3/8	10 3/4	**3**	3/4x3/8	11 3/4	4 3/16	1x1/2	13 3/4
3 3/16	3/4x3/8	10 3/4	3 3/16	3/4x3/8	11 3/4	4 7/16	1x1/2	13 3/4
3 7/16	7/8x7/16	10 3/4	**3 7/16**	7/8x7/16	11 3/4			

‡ Bore Tolerances + .000, + .002.

For improved availability, specify bore sizes shown in bold type (super standards) whenever possible. Some bore sizes may require a premium. See price list for details.

SHAFT ARRANGEMENTS:

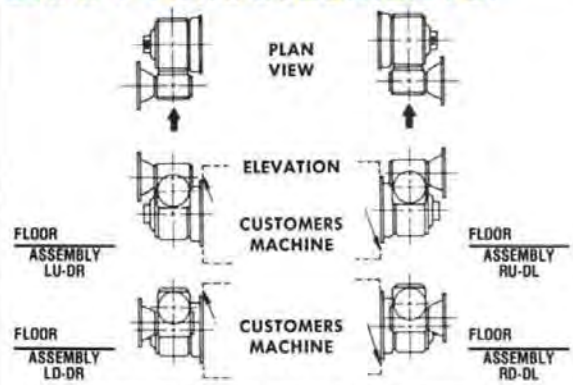

(A) The reducer is viewed looking at the attachment housing.

(B) No extra charge for the above assemblies provided shaft extensions are standard.

(C) The input shaft may be driven in either direction.

NOTE: Standard mounting position is exactly as shown. If motor is to be oriented in any other position, so state on order.

WINSMITH

3

double reduction—hollow shaft—motorized and gearmotor

SERIES: MSTD-MSTDW (WITH MOTOR)

STDMW
See page 120.

GEAR RATIOS AVAILABLE 50:1 THRU 3600:1
COMPLETE TORQUE AND HP RATINGS ..... PAGES 152-222
OVERHUNG LOAD RATINGS .....PAGES 153-223
SERVICE FACTORS ..... PAGE 230
COUPLING ADAPTERS ..... PAGE 120
HYDRAULIC MOTOR ADAPTERS ..... PAGE 116

Unit	3	4	5	6	7	8	9	10	12
Net Weight	27	43	75	82	145	156	247	265	400

TABLE OF WEIGHTS

Hydraulic Motor Flanges available, see pages 116-118.
Also available with foot mounted housing #CB - CT type, consult factory.
Units 3 —10 & 12 available in "C" flange coupling type, see page 120.

Additional Series Available: Series MSTT (Triple Reduction) see picture inset.

For MSTT output and intermediate stage dimensions, see MSTD dimensions below.

For MSTT input stage dimensions, see MCTT page 108.

For construction purposes send for certified dimension sheets.

DIMENSIONS: Dimensions apply to speed reducer only.

*Output shaft should rotate in a direction that keeps the torq arm in tension. If otherwise, contact the factory.

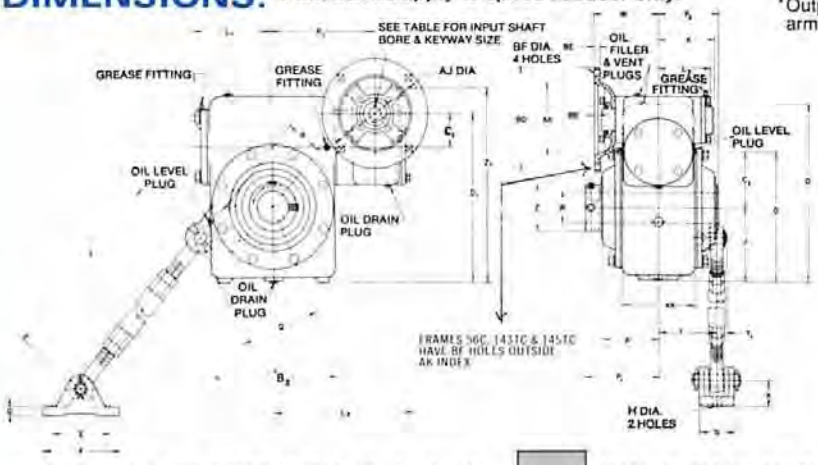

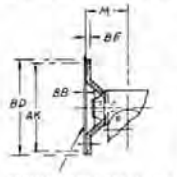

FRAME, KEYWAY and BORE DIMENSIONS

Frame No.	56C	143TC 145TC	182TC 184TC 213TCZ* 215TCZ*
AJ	5 7/8	5 7/8	7 1/4
AK	4 1/2	4 1/2	8 1/2
BB	3/16	3/16	3/16
BD	6 1/2	6 1/2	9
BE	5/16	5/16	3/8
BF	13/32	13/32	17/32
Keyway	3/16 × 3/32	3/16×3/32	1/4×1/8
Bore +.001 −.000	.6255	.8755	1.1255*

SPEED REDUCER DIMENSIONS (in inches)

Refer to D Line for these sizes.

Unit	B_2	C_1	C_2	D	D_1	E	F	G	H	I Max.	I Min.	J	K	KK	L_1	L_2	L_3	M	O	P_1	P_2	Q	R Min.	R_1	S	X	Y	Y_1	Z	Z_1	Maximum Frame Size
3MSTD	4 5/16	2	1.33	4 5/8	5.955	2 7/8	3 3/4	3/8	11/32	20	14	2 5/8	2 5/8	3	2 7/8	5 15/16	3 3/16	3 5/8	6 1/4	3 3/8	2 7/8	3	2 1/2	4	1 1/4	1 1/8	2 3/8	3/8	1 3/4	7 1/2	56C
4MSTD	6 1/8	2 5/8	1.33	6 1/8	7.458	3	4	7/8	13/32	23 1/2	18	3 1/2	2 13/16	3 1/4	3 15/16	6 15/16	3 3/16	3 5/8	8 3/8	3 11/16	3	3 3/4	3	5	1 3/4	1 3/8	2 11/16	1/2	2 1/4	9	56C
5MSTD	6 3/4	3	2	7	9	3	4	3/8	13/32	23 1/2	18	4	3	4	4 3/16	7 15/16	3 9/16	3 7/8	9 5/8	4 1/16	3 9/16	4 1/4	3 1/2	5 3/4	1 3/4	1 3/8	3 1/16	1/2	2 11/16	10 11/16	145TC - 184C
6MSTD	7 1/2	3 1/2	2	8	10	3 1/2	4 3/4	9/16	17/32	29	21	4 1/2	3 3/8	4 3/8	4 5/8	8 7/16	3 9/16	3 7/8	11	4 7/16	3 9/16	4 3/4	4	6 1/4	2 1/8	1 5/8	3 1/2	5/8	2 7/8	11 11/16	145TC - 184C
7MSTD	9 3/16	4	2 5/8	9	11 5/8	3 1/2	4 3/4	9/16	17/32	29	21	5	3 5/8	5	5 1/2	9 11/16	4 1/4	4 1/2	13	4 11/16	3 13/16	5 1/2	4 1/2	7 1/4	2 1/8	1 5/8	3 5/8	5/8	3 5/8	14 1/16	145TC - 184C
8MSTD	10 5/8	4.6	2 5/8	10.1	12.725	3 1/2	4 3/4	9/16	17/32	29	21	5 1/2	4 5/8	6 1/8	6 1/4	10 11/16	4 1/4	4 1/2	14 1/2	5 11/16	4 13/16	6 1/8	5	8 1/4	2 1/8	1 5/8	4 7/16	3/8	4 1/4	15 3/16	145TC - 184C
9MSTD	11 11/16	5.167	2 5/8	11.167	13.792	5	6 3/4	3/4	13/16	31	22	6	4 5/8	5 1/2	6 3/4	11 3/16	4 1/4	4 1/2	14 3/4	5 13/16	4 15/16	6 3/4	5 1/2	8 3/4	2 1/16	1 15/16	4 5/16	1 1/16	5 3/8	16 1/4	145TC - 184C
10MSTD	12 7/8	6	3	13	16	5	6 3/4	3/4	13/16	31	22	7	5 1/8	6 5/16	8 1/16	12 5/16	4 1/2	5 1/8	18 1/2	6 5/16	5 7/16	8	6	9 1/2	2 1/16	1 15/16	4 1/2	1 11/32	5 3/8	18 3/4	184TC - 215C
12MSTD	15 3/4	7	3 1/2	15 1/2	19	5 3/4	7 3/4	7/8	15/16	37 1/2	26 1/2	8 1/2	6 1/8	7 1/2	9 1/2	14 9/16	5	5 1/2	21 1/2	7 5/16	6 7/16	9 13/16	7	11 1/2	2 11/16	2 3/8	5 13/32	1 21/32	6 1/2	22 3/16	184TC - 215C

MOTOR DIMENSIONS:

H.P. @ 1800 RPM	1/6		1/4		1/3		1/2		3/4		1	1 1/2	2	3	5
Phase	Single *	Three	Single *	Three	Single *	Three	Single *	Three	Single *	Three	Three	Three	Three	Three	Three
AG	7 1/2	7 1/2	7 3/4	8 1/4	8 1/4	8 3/4	8 3/4	8 3/4	9 1/4	9 1/4	9 3/4	10 3/4	10 3/4	12 1/4	13 3/4
AP	5 21/32	5 21/32	5 21/32	5 21/32	6 31/64	6 31/64	6 31/64	6 31/64	6 31/64	6 31/64	6 31/64	6 31/64	6 31/64	10 11/32	10 11/32

*Single phase motor is capacitor start. Dimensions as shown are for open dripproof enclosure. Motors can be furnished open dripproof or enclosed.

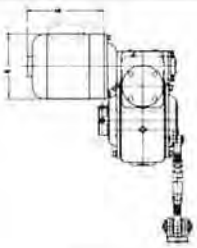

double reduction
hollow shaft—motorized and gearmotor

PARTS LIST:

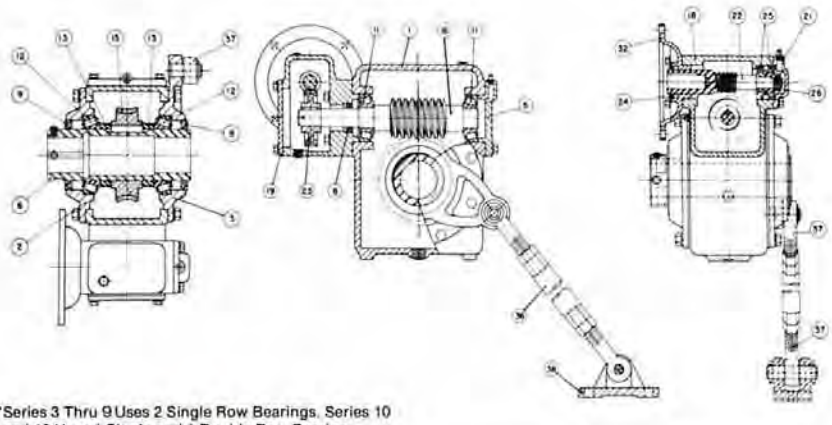

*Series 3 Thru 9 Uses 2 Single Row Bearings. Series 10 and 12 Uses 1 Single and 1 Double Row Bearing.

Part No.	Description
1	Housing
2	Slow Speed Cover
3	Slow Speed Cover With Torque Arm Lug
5	Intermediate Cap—Closed
5A	Intermediate Adapter Not Shown—Used With Inter. Cap Closed—Units 10 and 12
6	Slow Speed Shaft—Hollow
8	Oil Seal—Intermediate Shaft
9	Oil Seal—Slow Speed
*11	Roller Bearings—Intermediate Speed
12	Roller Bearings—Slow Speed
13	Slow Speed Spacer (Not Used on 3MSTD or 7MSTD)
15	Slow Speed Worm Gear—Bronze
16	Intermediate Speed Worm and Shaft Integral
18	High Speed Attachment Housing
19	High Speed Attachment Housing Cover
21	High Speed Cap—Closed
22	High Speed Worm and Shaft Integral
23	High Speed Worm Gear—Bronze
24	Oil Seal—High Speed
25	Roller Bearing—High Speed
26	High Speed Lock Nut
32	Motor Adapter
32B	Motor Adapter Spacer (Sizes 7, 8 & 9 only)
34	Intermediate Lock Nut—Not Shown—Used on Units 10 and 12
35	Intermediate Lock Washer—Not Shown—Used on Units 10 and 12
36	Torque Arm Turnbuckle
37	Torque Arm Rod End
38	Floor Support

DIMENSIONS: SLOW SPEED SHAFT BORES (in inches)

3 MSTD			4 MSTD			5 MSTD			6 MSTD			7 MSTD			8 MSTD		
W‡	Keyway	Length	W‡	Keyway	Length	W‡	Keyway	Length	W‡	Keyway	Length	W‡	Keyway	Length	W‡	Keyway	Length
3/4	3/16x3/32	6 1/4	15/16	1/4x1/8	6 11/16	1 3/16	1/4x1/8	7 1/4	1 3/16	1/4x1/8	8	1 5/8	3/8x3/16	8 1/2	1 11/16	3/8x3/16	10 1/2
13/16	3/16x3/32	6 1/4	1	1/4x1/8	6 11/16	1 1/4	1/4x1/8	7 1/4	1 1/4	1/4x1/8	8	1 11/16	3/8x3/16	8 1/2	1 3/4	3/8x3/16	10 1/2
7/8	3/16x3/32	6 1/4	1 1/16	1/4x1/8	6 11/16	1 3/8	5/16x5/32	7 1/4	1 3/8	5/16x5/32	8	1 3/4	3/8x3/16	8 1/2	1 7/8	1/2x1/4	10 1/2
15/16	1/4x1/8	6 1/4	1 1/8	1/4x1/8	6 11/16	1 7/16	3/8x3/16	7 1/4	1 7/16	3/8x3/16	8	1 7/8	1/2x1/4	8 1/2	1 15/16	1/2x1/4	10 1/2
1	1/4x1/8	6 1/4	1 3/16	1/4x1/8	6 11/16	1 1/2	3/8x3/16	7 1/4	1 1/2	3/8x3/16	8	1 15/16	1/2x1/4	8 1/2	2	1/2x1/4	10 1/2
1 1/16	1/4x1/8	6 1/4	1 1/4	1/4x1/8	6 11/16	1 5/8	3/8x3/16	7 1/4	1 5/8	3/8x3/16	8	2	1/2x1/4	8 1/2	2 3/16	1/2x1/4	10 1/2
1 1/8	1/4x1/8	6 1/4	1 3/8	5/16x5/32	6 11/16	1 11/16	3/8x3/16	7 1/4	1 11/16	3/8x3/16	8	2 3/16	1/2x1/4	8 1/2	2 1/4	1/2x1/4	10 1/2
1 3/16	1/4x1/8	6 1/4	1 7/16	3/8x3/16	6 11/16	1 3/4	3/8x3/16	7 1/4	1 3/4	3/8x3/16	8	2 1/4	1/2x1/4	8 1/2	2 7/16	5/8x5/16	10 1/2
1 1/4	1/4x1/8	6 1/4	1 1/2	3/8x3/16	6 11/16	1 7/8	1/2x3/16	7 1/4	1 7/8	1/2x1/4	8	2 7/16	5/8x7/32	8 1/2	2 1/2	5/8x5/16	10 1/2
			1 5/8	3/8x1/8	6 11/16				1 15/16	1/2x1/4	8				2 11/16	5/8x5/16	10 1/2
			1 11/16	3/8x1/8	6 11/16				2	1/2x1/4	8				2 3/4	5/8x5/16	10 1/2
									2 3/16	1/2x1/8	8				2 15/16	3/4x1/4	10 1/2
															3	3/4x1/4	10 1/2

9 MSTD			10 MSTD			12 MSTD		
W‡	Keyway	Length	W‡	Keyway	Length	W‡	Keyway	Length
2 3/16	1/2x1/4	10 3/4	2 3/16	1/2x1/4	11 3/4	2 11/16	5/8x5/16	13 3/4
2 1/4	1/2x1/4	10 3/4	2 1/4	1/2x1/4	11 3/4	2 3/4	5/8x5/16	13 3/4
2 7/16	5/8x5/16	10 3/4	2 7/16	5/8x5/16	11 3/4	2 15/16	3/4x3/8	13 3/4
2 1/2	5/8x5/16	10 3/4	2 1/2	5/8x5/16	11 3/4	3	3/4x3/8	13 3/4
2 11/16	5/8x5/16	10 3/4	2 11/16	5/8x5/16	11 3/4	3 3/16	3/4x3/8	13 3/4
2 3/4	5/8x5/16	10 3/4	2 3/4	5/8x5/16	11 3/4	3 7/16	7/8x7/16	13 3/4
2 15/16	3/4x3/8	10 3/4	2 15/16	3/4x3/8	11 3/4	3 15/16	1x1/2	13 3/4
3	3/4x3/8	10 3/4	3	3/4x3/8	11 3/4	4 3/16	1x1/2	13 3/4
3 3/16	3/4x3/8	10 3/4	3 3/16	3/4x3/8	11 3/4	4 7/16	1x1/2	13 3/4
3 7/16	7/8x7/16	10 3/4	3 7/16	7/8x7/16	11 3/4			

‡ Bore Tolerances + .000, + .002.

For improved availability, specify bore sizes shown in bold type (super standards) whenever possible. Some bore sizes may require a premium. See price list for details.

SHAFT ARRANGEMENTS:

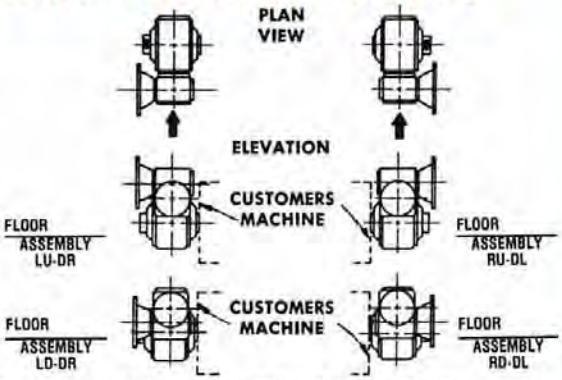

(A) Reducer viewed looking at the attachment housing.

(B) No extra charge for the above assemblies provided shaft extensions are standard.

(C) The input shaft may be driven in either direction.

NOTE: Standard mounting position is exactly as shown. If motor is to be oriented in any other position, so state on order.

WINSMITH

double reduction—drop bearing

SERIES: LD

GEAR RATIOS AVAILABLE 50:1 THRU 3600:1
COMPLETE TORQUE AND HP RATINGS ..... PAGES 152-222
OVERHUNG LOAD RATINGS ..... PAGES 153-223
SERVICE FACTORS ..... PAGE 230
COUPLING ADAPTERS ..... PAGE 120
HYDRAULIC MOTOR ADAPTERS ..... PAGE 116

LD

LX

Additional Series Available: Series LT (Triple Reduction) and LX (Double Reduction-Helical and Worm).

For LT and LX output and intermediate stage dimensions, see LD dimensions below.

For LT and LX input stage dimensions, see CVT page 106 and CVX page 86 respectively.

For construction purposes, send for certified dimension sheet.

TABLE OF WEIGHTS

Unit	4	5	6	7	8	9	10	12
Net Weight	56	85	115	150	206	263	354	527

Alloy steel slow speed shafts.

DIMENSIONS:

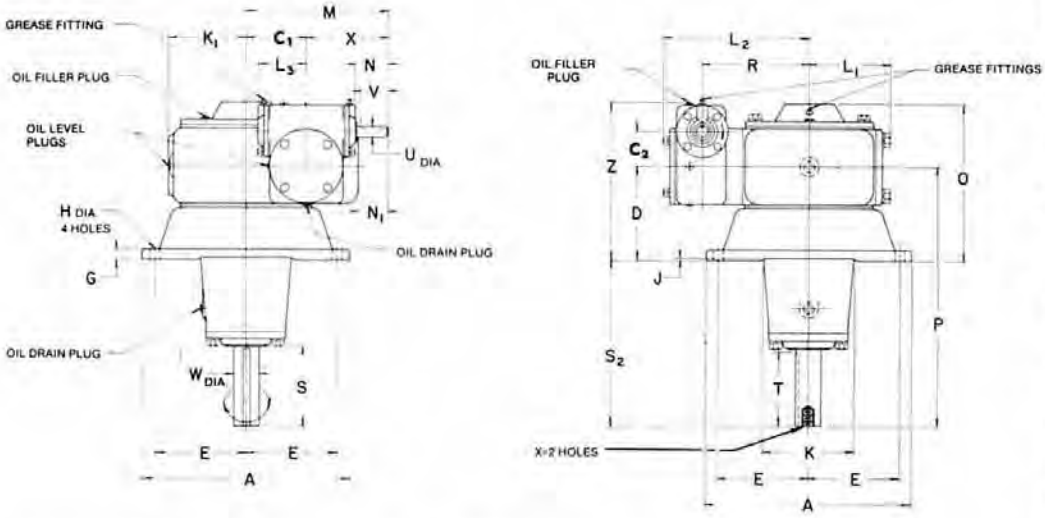

X DIMENSIONS

Unit	Tap	Depth	Bolt Circle
4LD	1/4" x 20"	3/4"	5/8"
5LD	5/16" x 18	1	3/4
6LD	5/16" x 18"	1"	3/4"
7LD	3/8" x 16	1	1
8LD	3/8" x 16"	1"	1 1/8"
9LD	3/8" x 16	1	1 1/2
10LD	3/8" x 16"	1"	1 1/2"
12LD	3/8" x 16"	1"	2"

	Slow Speed Shaft				
Unit	*W	S	S_2	T	Keyway
4LD	1	3 11/16	7 1/2	3 1/2	1/4 x 1/8
5LD	1 7/16	4 11/16	9 1/2	4 9/16	3/8 x 3/16
6LD	1 5/8	4 11/16	9 1/2	4 9/16	3/8 x 3/16
7LD	1 3/4	5 3/4	10 1/2	5 1/4	3/8 x 3/16
8LD	1 3/4	5 3/4	10 1/2	5 1/2	3/8 x 3/16
9LD	2 3/16	5 3/4	12 1/2	5 1/2	1/2 x 1/4
10LD	2 7/16	7 11/16	15 1/2	7 1/2	5/8 x 5/16
12LD	2 15/16	7 5/8	15 1/2	7 1/2	3/4 x 3/8

SPEED REDUCER DIMENSIONS (in inches) Refer to D Line for these sizes.

Unit	A	C_1	C_2	D	E	G	H	J	K	K_1	L_1	L_2	L_3	M	O	P	R	X	Z	High Speed Shaft *U	N	N_1	V	Keyway
4LD	9	2 5/8	1.33	4	4	1/2	13/32	1/8	4 3/8	3 1/2	3 15/16	6 15/16	2 7/16	6 3/4	6 11/16	11 1/2	5	4 1/8	6 7/8	1/2	1 11/16	1 7/8	1 1/2	1/8 x 1/16
5LD	9 3/4	3	2	5 3/8	4 1/8	5/8	9/16	1/8	5 1/4	4	4 3/16	7 15/16	2 7/8	7 3/4	8 3/8	14 7/8	5 3/4	4 3/4	9 1/16	5/8	1 7/8	2 1/8	1 3/4	3/16 x 3/32
6LD	12	3 1/2	2	5 3/8	5 1/4	5/8	9/16	1/8	5 1/4	4 1/2	4 5/8	8 7/16	2 7/8	8 1/4	9	14 7/8	6 1/4	4 3/4	9 1/16	5/8	1 7/8	1 3/4	1 3/4	3/16 x 3/32
7LD	12 1/2	4	2 5/8	6	5 3/8	3/4	11/16	1/8	5 3/4	5	5 1/2	9 11/16	3 15/16	10	9 5/8	16 1/2	7 1/4	6	11 1/16	3/4	2 1/16	2	2	3/16 x 3/32
8LD	15 3/4	4.6	2 5/8	6	7	7/8	13/16	1/8	6 3/8	5 1/2	6 1/4	10 11/16	3 15/16	10 5/8	10 5/8	16 1/2	8 1/4	6	11 1/16	3/4	2 1/16	1 5/8	2	3/16 x 3/32
9LD	16 1/2	5.167	2 5/8	7	7 1/4	1	15/16	3/16	7 3/4	6	6 3/4	11 13/16	3 15/16	11 3/16	11 5/8	19 1/2	8 3/4	6	12 1/16	3/4	2 1/16	2 3/8	2	3/16 x 3/32
10LD	19	6	3	7	8 1/2	1	15/16	3/16	8 3/4	7	8 1/16	12 5/16	4 3/16	12 1/2	12 1/8	22 1/2	9 1/2	6 1/2	12 3/4	7/8	2 5/16	1	2 1/4	3/16 x 3/32
12LD	21 1/2	7	3 1/2	8	9 1/2	1 1/4	1 1/8	1/4	9 3/4	8 1/2	9 1/2	14 9/16	4 5/8	14 1/8	14 1/16	23 1/2	11 1/2	7 1/16	14 11/16	1	2 7/16	1 1/8	2 1/2	1/4 x 1/8

***Shaft diameter tolerance +.000 —.001. For construction purposes send for Certified Dimension Sheets.**

PARTS LIST:

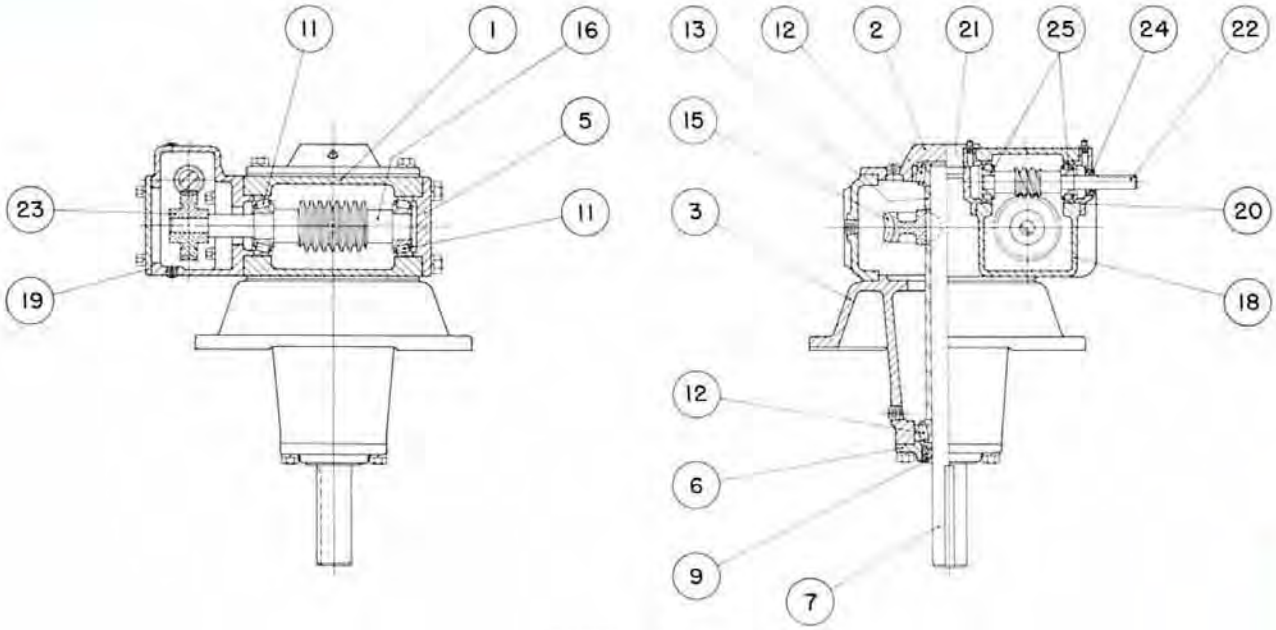

PARTS INDEX

Part No.	Description	Part No.	Description
1	Housing	18	High Speed Attachment Housing
2	Slow Speed Cover	19	High Speed Attachment Housing Cover
3	Slow Speed Cover and Base	20	High Speed Cover — Open
5	Intermediate Cover — Closed	21	High Speed Cover — Closed
5A	Intermediate Adapter — Not Shown — Used With Inter. Cover Closed Units 10 thru 12 incl.	22	High Speed Worm and Shaft Integral
6	Slow Speed Cap	23	High Speed Worm Gear — Bronze
7	Slow Speed Shaft	24	Oil Seal — High Speed
9	Oil Seal — Slow Speed	25	Roller Bearing — High Speed
*11	Roller Bearing — Intermediate Speed	26	Intermediate Lock Nut — Not Shown — Use on Units 10 thru 12 incl.
12	Roller Bearing — Slow Speed		
13	Slow Speed Spacer — Short		
15	Slow Speed Worm Gear — Bronze		
16	Intermediate Speed Worm and Shaft Integral		

* Series 4 thru 9 Uses 2 Single Row Bearings. Series 10 and 12 Uses 1 Single and 1 Double Row Bearings.

SHAFT ARRANGEMENTS:

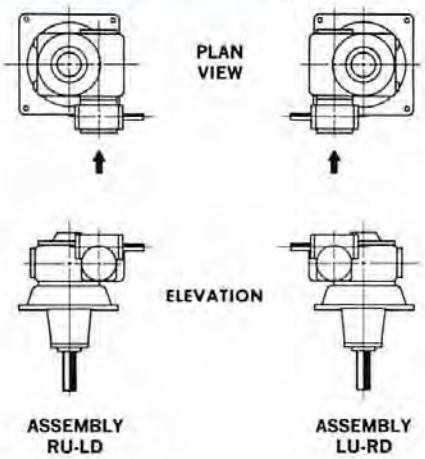

(A) The reducer is viewed looking at the attachment housing.

(B) No extra charge for the above assemblies provided the shaft extensions are of standard length.

(C) The input shaft may be driven in either direction.

(D) Units may be mounted in any position. (ceiling, sidewall, etc.) if specified when ordered.

double reduction—drop bearing motorized and gearmotor

SERIES: MLD-MLDW (WITH MOTOR)

GEAR RATIOS AVAILABLE 50:1 THRU 3600:1

COMPLETE TORQUE AND HP RATINGS ..... PAGES 152-222
OVERHUNG LOAD RATINGS .....PAGES 153-223
SERVICE FACTORS ..... PAGE 230
COUPLING ADAPTERS ..... PAGE 120
HYDRAULIC MOTOR ADAPTERS ..... PAGE 116

TABLE OF WEIGHTS

Unit	4	5	6	7	8	9	10	12
Net Weight	58	80	120	155	211	268	359	532

Alloy steel slow speed shafts. Hydraulic Motor Flanges Available, see pages 116-118.

Units 4 through 10 & 12 available in "C" flange coupling type, see page 120.

MLDW

LDMW
See page 120.

Additional Series Available: Series MLT (Triple Reduction)

For MLT output and intermediate stage dimensions, see MLD dimensions below.

For MLT input stage dimensions, see MCVT page 110.

For construction purposes send for certified dimension sheets.

DIMENSIONS: Dimensions apply to speed reducer only. For motor dimension see next page.

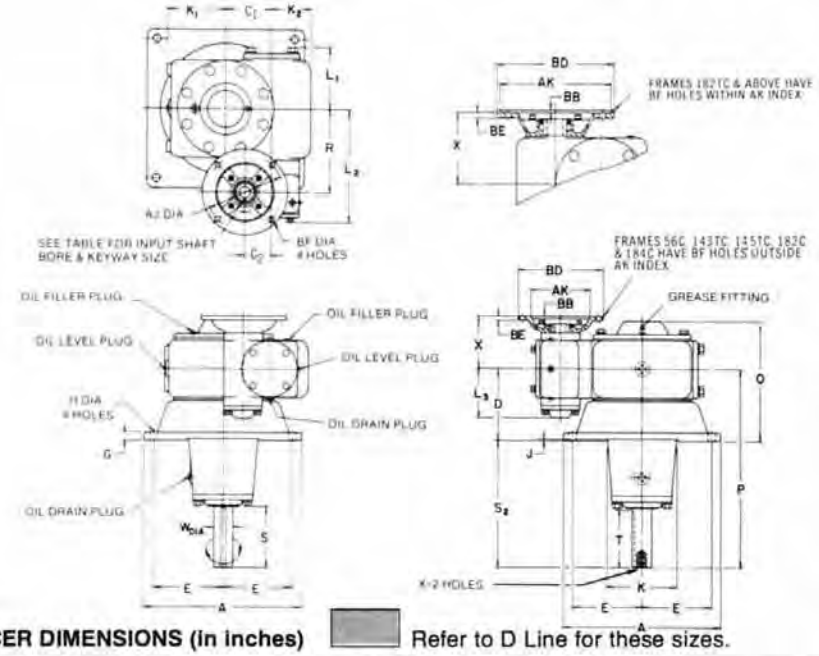

X DIMENSIONS

Unit	Tap	Depth	Bolt Circle
4MLD	1/4" x 20"	3/4"	3/8"
5 MLD	5/16" x 18"	1"	3/4"
6MLD	5/16" x 18"	1"	3/4"
7 MLD	3/8" x 16"	1"	1"
8MLD	3/8" x 16"	1"	1 1/8"
9 MLD	3/8" x 16"	1"	1 1/8"
10MLD	3/8" x 16"	1"	1 1/2"
12MLD	3/8" x 16"	1"	2"

FRAME, KEYWAY and BORE DIMENSIONS

Frame No.	56C	143TC 145TC	182TC 184TC 213TC2* 215TC2*
AJ	5 7/8	5 7/8	7 1/4
AK	4 1/2	4 1/2	8 1/2
BB	3/16	3/16	3/16
BD	6 1/2	6 1/2	9
BE	5/16	5/16	3/8
BF	13/32	13/32	17/32
Keyway	3/16 x 3/32	3/16 x 3/32	1/4 x 1/8
Bore +.001 −.000	.6255	.8755	1.1255 *

SPEED REDUCER DIMENSIONS (in inches) Refer to D Line for these sizes.

Unit No.	A	C_1	D	E	G	H	J	K	K_1	K_2	L_1	L_2	L_3	O	P	R	X	C_2	Slow Speed Shaft W*	S	S_2	T	Keyway	Maximum Frame Size
4MLD	9	2 5/8	4	4	1/2	13/32	1/8	4 5/8	3 1/2	2 1/4	3 15/16	5 13/16	3 9/16	6 11/16	11 1/2	5	3 5/8	1.33	1	3 11/16	7 1/2	3 1/2	1/4x1/8	56C
5MLD	9 3/4	3	5 3/8	4 1/2	5/8	9/16	1/8	5 1/4	4	2 5/8	4 3/16	7 15/16	3 9/16	8 3/8	14 7/8	5 3/4	3 7/8	2	1 7/16	4 11/16	9 1/2	4 9/16	3/8x3/16	145TC-184C
6MLD	12	3 1/2	5 3/8	5 1/4	5/8	9/16	1/8	5 1/4	4 1/2	3	4 5/8	8 7/16	3 9/16	9	14 7/8	6 1/4	3 7/8	2	1 5/8	4 11/16	9 1/2	4 9/16	3/8x3/16	145TC-184C
7MLD	12 1/2	4	6	5 3/8	3/4	11/16	1/8	5 3/4	5	4	5 1/2	9 11/16	4 1/4	9 5/8	16 1/2	7 1/4	4 1/2	2 5/8	1 3/4	5 3/4	10 1/2	5 1/4	3/8x3/16	145TC-184C
8MLD	15 3/4	4.6	6	7	7/8	13/16	1/8	6 3/8	5 1/2	4.4	6 1/4	10 11/16	4 1/4	10 5/8	16 1/2	8 1/4	4 1/2	2 5/8	1 3/4	5 3/4	10 1/2	5 1/2	3/8x3/16	145TC-184C
9MLD	16 1/2	5.167	7	7 1/4	1	15/16	3/16	7 3/4	6	3.6	6 3/4	11 3/16	4 1/4	11 5/8	19 1/2	8 3/4	4 1/2	2 5/8	2 3/16	5 3/4	12 1/2	5 1/2	1/2x1/4	145TC-184C
10MLD	19	6	7	8 1/2	1	15/16	3/16	8 3/4	7	5 1/2	8 1/16	12 5/16	4 1/2	12 1/8	22 1/2	9 1/2	5 1/8	3	2 7/16	7 11/16	15 1/2	7 1/2	5/8x5/16	184TC-215C
12MLD	21 1/2	7	8	9 1/2	1 1/4	1 1/8	1/4	9 3/4	8 1/2	6	9 1/2	14 9/16	5	14 1/16	23 1/2	11 1/2	5 1/2	3 1/2	2 15/16	7 5/8	15 1/2	7 1/2	3/4x3/8	184TC-215C

*Slow speed shaft diameter tolerance +.000 −.001. For construction purposes send for Certified Dimension Sheets.

double reduction
drop bearing—motorized and gearmotor

MOTOR DIMENSIONS:

H.P. @ 1800 RPM	1/6		1/4		1/3		1/2		3/4		1	1 1/2	2	3	5
Phase	Single *	Three	Single *	Three	Single *	Three	Single *	Three	Single *	Three	Three	Three	Three	Three	Three
AG	7 1/2	7 1/2	7 3/4	8 1/4	8 1/4	8 3/4	8 3/4	8 3/4	9 1/4	9 1/4	9 3/4	10 3/4	10 3/4	12 1/4	13 3/4
AP	5 21/32	5 21/32	5 21/32	5 21/32	6 31/64	6 31/64	6 31/64	6 31/64	6 31/64	6 31/64	6 31/64	6 31/64	6 31/64	10 11/32	10 11/32

*Single phase motor is capacitor start. Dimensions as shown are for open dripproof enclosure. Motors can be furnished open dripproof or enclosed.

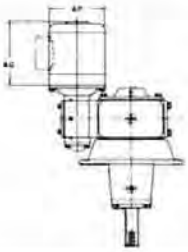

PARTS LIST:

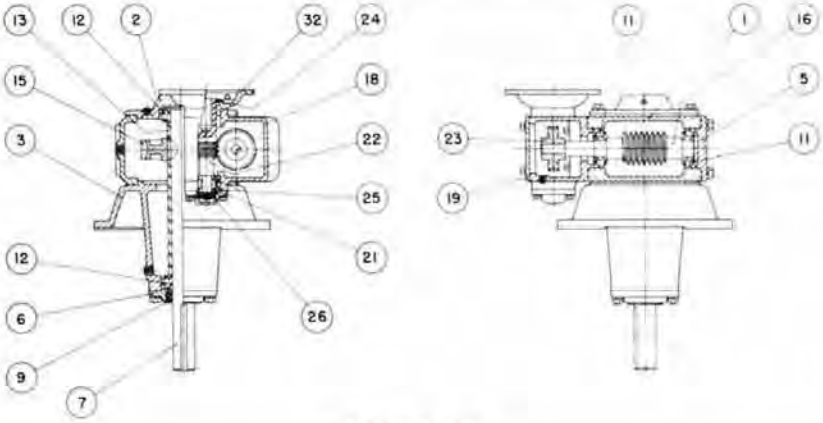

PARTS INDEX

Part No.	Description	Part No.	Description
1	Housing	19	High Speed Attachment Housing Cover
2	Slow Speed Cover	21	High Speed Cover — Closed
3	Slow Speed Cover and Base	22	High Speed Worm and Shaft Integral
5	Intermediate Cover — Closed	23	High Speed Worm Gear — Bronze
5A	Intermediate Adapter — Not Shown — Used With Inter. Cover Closed Units 10 thru 12 incl.	24	Oil Seal — High Speed
6	Slow Speed Cap	25	Roller Bearing — High Speed
7	Slow Speed Shaft	26	High Speed Lock Nut
9	Oil Seal — Slow Speed	32	Motor Adapter
*11	Roller Bearing — Intermediate Speed	32B	Motor Adapter Spacer (Sizes 7, 8 & 9 only)
12	Roller Bearing — Slow Speed	34	Intermediate Lock Nut — Not Shown — Use on Units 10 thru 12 incl.
13	Slow Speed Spacer — Short	35	Intermediate Lock Washer — Not Shown — Use on Units 10 thru 12 incl.
15	Slow Speed Worm Gear — Bronze		
16	Intermediate Speed Worm and Shaft Integral		
18	High Speed Attachment Housing		

* Series 4 thru 9 Uses 2 Single Row Bearings. Series 10 and 12 Uses 1 Single and 1 Double Row Bearings.

SHAFT ARRANGEMENTS:

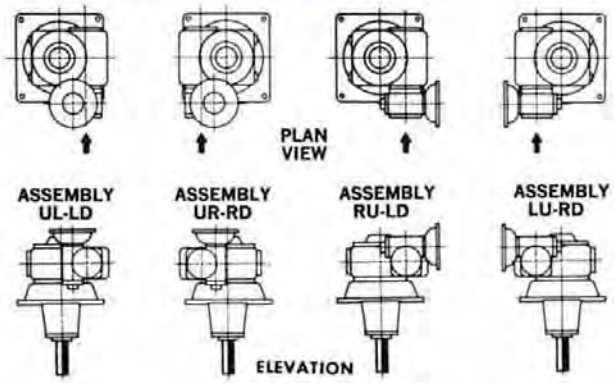

(A) The reducer is viewed looking at the attachment housing.

(B) No extra charge for the above assemblies provided the shaft extensions are of standard length.

(C) The input shaft may be driven in either direction.

(D) Units may be mounted in any position, (ceiling, sidewall, etc.) if specified when ordered.

(E) Assemblies RU-LD and LU-RD available in sizes 4-8 only.

WINSMITH

INDEX SPECIFICATIONS AND DIMENSIONS

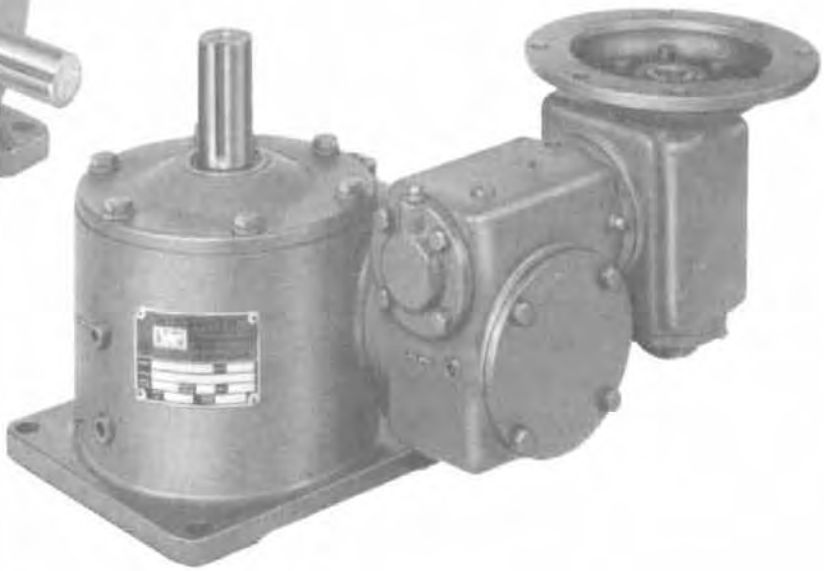

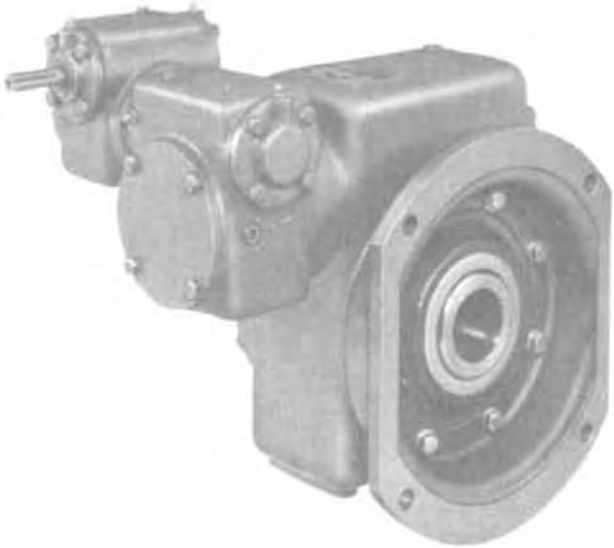

Section 4

Triple Reduction Units

Model Page
CTT-STT-SFT. 104
CVT-LT 106
MCTT-MCTTW
MSTT-MSFT 108
MCVT-MCVTW
MLT 110
ADDITIONAL INTEGRAL FEATURES
CT1-CV1
Torque
Controls 112
CUSTOM
CAPABILITIES . 114
MHCT-
Hydraulic
Motor
Flange 116
MHCV
Hydraulic
Motor
Flange 118
"C" FLANGE
ADAPTER
COUPLING
TYPE 120

Triple Reduction Units

4

WINSMITH

triple reduction

SERIES: CTT

GEAR RATIOS AVAILABLE 1000:1 THRU 180,000:1

COMPLETE TORQUE AND HP RATINGS ..... PAGES 152-222
OVERHUNG LOAD RATINGS .....PAGES 153-223
SERVICE FACTORS ..... PAGE 230
COUPLING ADAPTERS ..... PAGE 120
HYDRAULIC MOTOR ADAPTERS ..... PAGE 116

CTT

STT

SFT

Additional Series Available: Series STT (Triple Reduction-Hollow Shaft) and SFT (Triple Reduction - Hollow Shaft)

For STT and SFT output and intermediate stage dimensions, see STD page 92 and SFD page 90 respectively.

For STT & SFT input stage dimensions, see CTT dimensions below.

For construction purposes send for certified dimension sheets.

TABLE OF WEIGHTS

Unit	5	6	7	8	9	10	11	12	13	14	15
Net Weight	70	85	130	165	190	270	310	410	510	705	1280

Units #5, 6, 7, 8, 9, 10, and 12 are available with hollow output shafts, see page 94-96. Alloy steel slow speed shafts available.

DIMENSIONS:

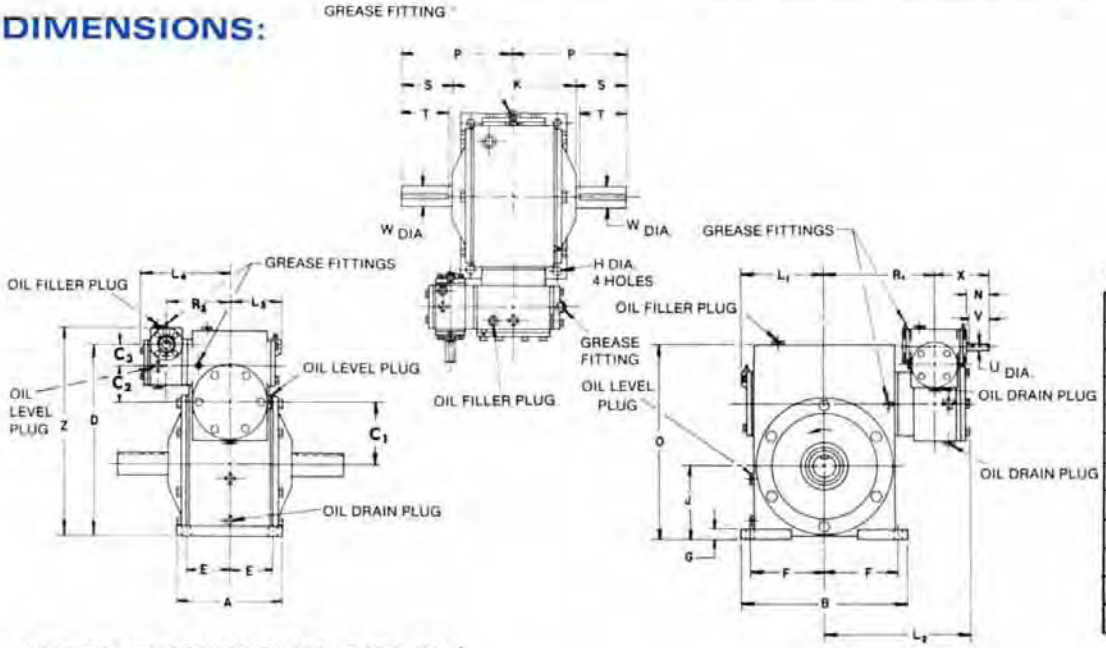

CENTER DISTANCES

Unit	C_1	C_2	C_3
5 CTT	3	2	1.33
6 CTT	3½	2	1.33
7 CTT	4	2⅝	1.33
8 CTT	4.6	2⅝	1.33
9 CTT	5.167	2⅝	1.33
10 CTT	6	3	2
11 CTT	6½	3	2
12 CTT	7	3½	2
13 CTT	7⅝	3½	2
14 CTT	8⅛	4	2⅝
15 CTT	9	5.167	2⅝

SPEED REDUCER DIMENSIONS (in inches)

Unit	A	B	D	E	F	G	H	J	K	L_1	L_2	L_3	L_4	O	P	R_1	R_2	X	Z	High Speed Shaft U*	N	V	Keyway	Slow Speed Shaft W*	S	T	Keyway
5CTT	6	8¼	10.33	2⅜	3½	⅝	9/16	4	6	4 3/16	7 15/16	2⅞	5 15/16	9⅝	5⅞	5¾	4	4⅛	11⅞	½	1 11/16	1½	⅛ x 1/16	1¼	2⅞	2¾	¼ x ⅛
6CTT	6¼	9¼	11.33	2⅝	4⅛	⅝	9/16	4½	7¼	4⅝	8 7/16	2⅞	5 15/16	11	7	6¼	4	4⅛	12⅞	½	1 11/16	1½	⅛ x 1/16	1½	3⅜	3¼	⅜ x 3/16
7CTT	7	11	12.96	2⅞	4⅞	⅝	9/16	5	7¼	5½	9 11/16	3 15/16	6 15/16	13	7½	7¼	5	4⅛	14½	½	1 11/16	1½	⅛ x 1/16	1¾	3⅞	3¾	⅜ x 3/16
8CTT	8	12½	14.06	3¼	5½	¾	11/16	5½	9¼	6¼	10 11/16	3 15/16	6 15/16	14½	8½	8¼	5	4⅛	15⅝	½	1 11/16	1½	⅛ x 1/16	1¾	3⅞	3¾	⅜ x 3/16
9CTT	8½	13½	15⅛	3½	6	¾	11/16	6	9¼	6¾	11 3/16	3 15/16	6 15/16	16	9	8¾	5	4⅛	16 11/16	½	1 11/16	1½	⅛ x 1/16	2	4⅜	4¼	½ x ¼
10CTT	10	15	18	4	6½	¾	13/16	7	10¼	8 1/16	12 5/16	4 3/16	7 15/16	18½	9¾	9½	5¾	4¾	19 11/16	⅝	1⅞	1¾	3/16 x 3/32	2¼	4⅝	4½	½ x ¼
11CTT	10	16	19	4	7	¾	13/16	7½	10¾	8 5/16	12 9/16	4 3/16	7 15/16	20	10½	9¾	5¾	4¾	20 11/16	⅝	1⅞	1¾	3/16 x 3/32	2½	5⅛	5	⅝ x 5/16
12CTT	12½	18	21	5	7½	1	1 1/16	8½	12¼	9½	14 9/16	4⅝	8 7/16	21½	11¾	11½	6¼	4¾	22 11/16	⅝	1⅞	1¾	3/16 x 3/32	2¾	5⅝	5½	⅝ x 5/16
13CTT	14½	19	22½	5¾	8	1	1 1/16	9⅜	14¾	10¼	15 5/16	4⅝	8 7/16	23	13½	12¼	6¼	4¾	24 3/16	⅝	1⅞	1¾	3/16 x 3/32	3	6⅛	6	¾ x ⅜
14CTT	16½	21	24¾	6¾	9	1¼	1 5/16	10	16¾	11¾	16⅛	5½	9 11/16	25	15	13	7¼	6	27 3/16	¾	2 1/16	2	3/16 x 3/32	3¼	6⅝	6½	¾ x ⅜
15CTT	19	23	29.79	7½	8¼	1¾	1 5/16	13	18	13⅝	19¾	6¾	11 13/16	29 13/16	16¼	16	8¾	6	32¼	¾	2⅛	2	3/16 x 3/32	3¾	7¼	7	⅞ x 7/16

*Shaft diameter tolerance +.000 −.001. For construction purposes send for Certified Dimension Sheets.

PARTS LIST:

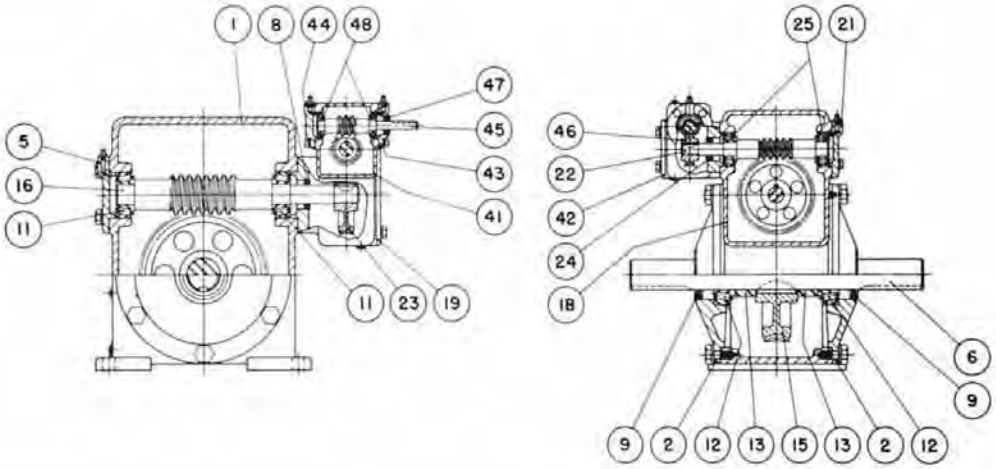

PARTS INDEX

Part No.	Description
1	Housing
2	Slow Speed Cover — Open
3	Slow Speed Cover — Closed — Not Shown
5	Intermediate Cover — Closed
5A	Intermediate Adapter — Not Shown — Used with Intermediate Cover — Closed. Unit 10 thru 15 Incl.
6	Slow Speed Shaft — Double Extension
7	Slow Speed Shaft — Single Extension — Not Shown
8	Oil Seal Intermediate Slow Speed
9	Slow Speed Oil Seal
*11	Roller Bearing — Intermediate Slow Speed
12	Roller Bearing — Slow Speed
13	Slow Speed Spacer
15	Slow Speed Worm Gear — Bronze
16	Intermediate Slow Speed Worm and Shaft Integral
18	Intermediate Speed Attachment Housing
19	Intermediate Speed Attachment Housing Cover
21	Intermediate High Speed Cap —Closed
22	Intermediate High Speed Worm and Shaft Integral
23	Intermediate Speed Worm Gear — Bronze
24	Intermediate High Speed Oil Seal
25	Roller Bearing Intermediate High Speed
26	Intermediate Speed Locknut — Not Shown — Used on Units 10 thru 15 Incl.
41	High Speed Attachment Housing
42	High Speed Attachment Housing Cover
43	High Speed Cap — Open
44	High Speed Cap — Closed
45	High Speed Worm and Shaft Integral
46	High Speed Worm Gear — Bronze
47	High Speed Oil Seal
48	Roller Bearing — High Speed

* Series 5 thru 9 incl. use 2 Single Row Bearings. Series 10 thru 15 incl. use 1 Single Row and 1 Double Row Bearing.

SHAFT ARRANGEMENTS:

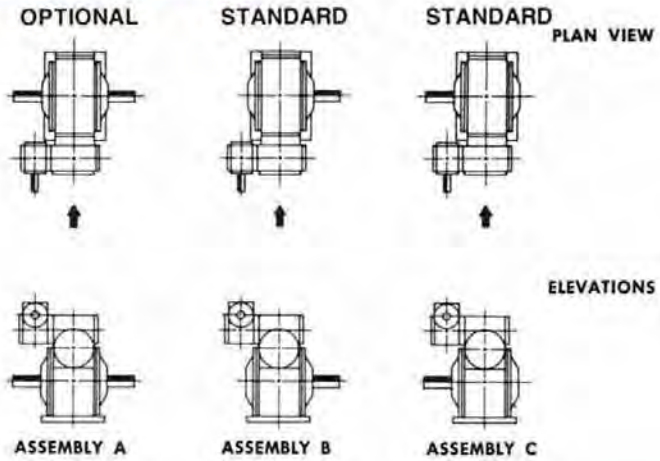

(A) The reducer housing is viewed looking at the intermediate attachment housing.

(B) No extra charge for the standard assemblies provided the shaft extensions are of standard length.

(C) The input shaft may be driven in either direction.

(D) Many other assemblies available — request assembly data.

(E) Units may be mounted in any position, (ceiling, sidewall, etc.), if specified when ordered.

4

triple reduction

SERIES: CVT

GEAR RATIOS AVAILABLE 1000:1 THRU 180,000:1
COMPLETE TORQUE AND HP RATINGS ..... PAGES 152-222
OVERHUNG LOAD RATINGS .....PAGES 153-223
SERVICE FACTORS ..... PAGE 230
COUPLING ADAPTERS ..... PAGE 120
HYDRAULIC MOTOR ADAPTERS ..... PAGE 116

TABLE OF WEIGHTS

Unit	5	6	7	8	9	10	11	12	13	14	15
Net Weight	75	90	135	170	210	315	400	505	700	930	1275

Alloy steel slow speed shafts available.

Additional Series Available: Series LT (Triple Reduction—Drop Bearing Type)

For LT output and intermediate stage dimensions, see LD page 98.

For LT input stage dimensions, See below.

For construction purposes, send for certified dimension sheets.

DIMENSIONS:

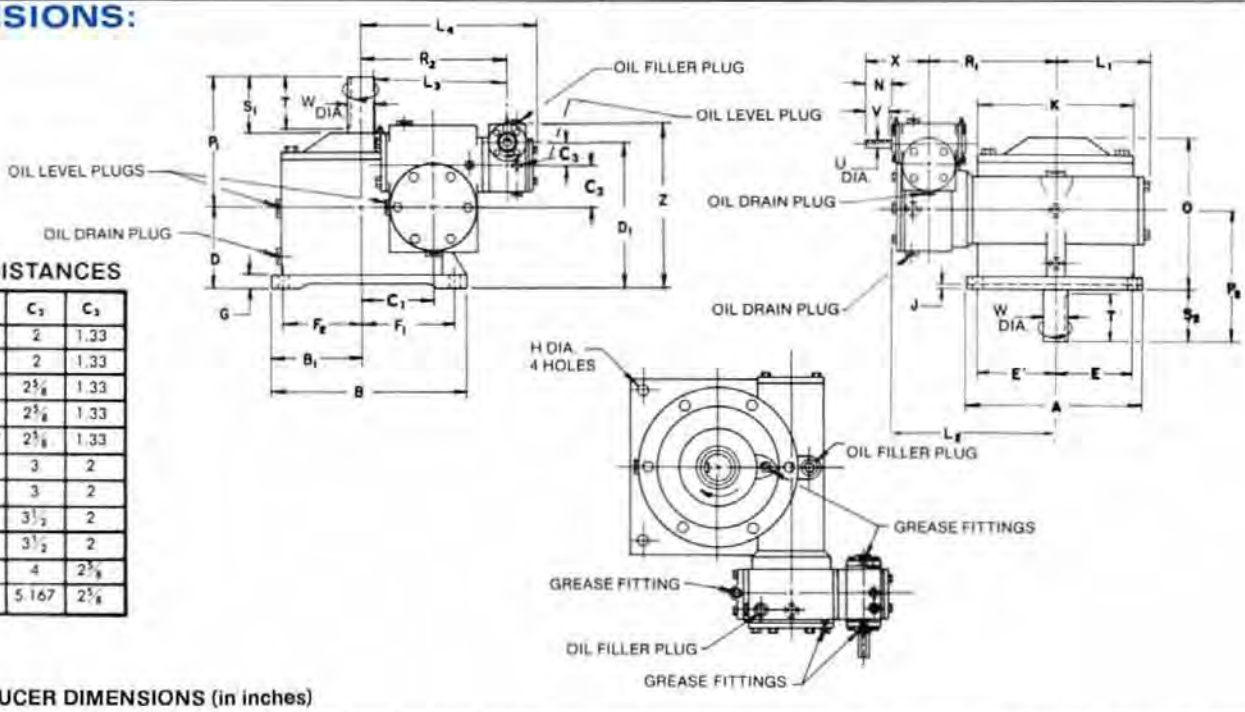

CENTER DISTANCES

Unit	C_1	C_2	C_3
5 CTT	3	2	1.33
6 CTT	3 1/2	2	1.33
7 CTT	4	2 5/8	1.33
8 CTT	4.6	2 5/8	1.33
9 CTT	5.167	2 5/8	1.33
10 CTT	6	3	2
11 CTT	6 1/2	3	2
12 CTT	7	3 1/2	2
13 CTT	7 5/8	3 1/2	2
14 CTT	8 1/8	4	2 5/8
15 CTT	9	5.167	2 5/8

SPEED REDUCER DIMENSIONS (in inches)

Unit	A	B	B_1	D	D_1	E	F_1	F_2	G	H	J	K	L_1	L_2	L_3	L_4	O	P_1	P_2	R_1	R_2	X	Z	High Speed Shaft U*	N	V	Keyway	SLOW SPEED SHAFT W*	S_1	S_2	T	KEYWAY
5CVT	7 1/4	8 3/4	3 3/4	3 3/4	7.08	3 1/8	4 1/2	3 1/4	5/8	3/16	1/8	6 3/4	4 3/4	7 15/16	6 7/8	8 15/16	6 3/4	5 7/8	6 1/2	5 3/4	7	4 1/8	8 5/8	1/2	1 11/16	1 1/2	1/8 x 1/16	1 1/4	2 7/8	2 3/4	2 1/4	1/4 x 1/8
6CVT	8	10	4 1/4	4	7.33	3 1/2	5 1/4	3 3/4	5/8	3/16		7 1/2	4 3/8	8 7/16	6 7/8	9 3/16	7 3/8	7	7 1/4	6 1/4	7 1/2	4 1/8	8 7/8	1/2	1 11/16	1 1/2	1/8 x 1/16	1 1/2	3 3/8	3 1/4	3 1/4	3/8 x 3/16
7CVT	9 1/2	10 7/8	4 3/4	4 1/2	8.46	4 1/8	5 1/2	4 1/8	3/4	3/16		8 5/16	5 1/2	9 11/16	8 15/16	10 11/16	8 1/8	7 1/2	8 1/4	7 1/4	9	4 1/8	10	1/2	1 11/16	1 1/2	1/8 x 1/16	1 3/4	3 7/8	3 3/4	3 3/4	3/8 x 3/16
8CVT	11 1/2	12 1/2	5 3/4	5	8.96	5	6	5	3/4	11/16		10 1/4	6 1/4	10 11/16	8 15/16	11 1/16	9 5/8	8 1/2	8 3/4	8 1/4	9.6	4 1/8	10 1/2	1/2	1 11/16	1 1/2	1/8 x 1/16	1 3/4	3 7/8	3 3/4	3 3/4	3/8 x 3/16
9CVT	12 1/2	16 3/4	7 1/2	5 1/2	9.46	5 1/2	8 1/2	6 3/4	3/4	11/16	3/16	11 5/8	6 3/4	11 3/16	8 15/16	12 1/8	10 1/8	9	9 3/4	8 3/4	10.167	4 1/8	11	1/2	1 11/16	1 1/2	1/8 x 1/16	2	4 7/8	4 1/4	4 1/4	1/2 x 1/4
10CVT	14	20 1/2	8 1/2	6	11	6	11	7 1/2	3/4	13/16		12 7/8	8 3/4	12 5/8	9 15/16	13 11/16	11 1/8	9 3/4	10 1/2	9 1/2	11 3/4	4 3/4	12 11/16	5/8	1 7/8	1 3/4	3/16 x 3/32	2 1/4	4 5/8	4 1/2	4 1/2	1/2 x 1/4
11CVT	14 1/2	22	9 5/8	7	12	6 1/4	11 3/8	8 5/8	3/4	13/16	3/16	13 1/2	8 5/8	12 9/16	9 15/16	14 5/16	12 3/8	10 1/2	12	9 3/4	12 1/4	4 3/4	13 11/16	5/8	1 7/8	1 3/4	3/16 x 3/32	2 1/2	5 1/8	5	5	5/8 x 3/16
12CVT	17 1/2	25	11 1/4	8	13 1/2	7 1/2	12 1/2	10	1	13/16	3/16	15 3/4	9 1/2	14 3/16	10 7/8	15 7/16	14 1/2	11 3/4	13 1/2	11 1/2	13 1/4	4 3/4	15 3/16	5/8	1 7/8	1 3/4	3/16 x 3/32	2 3/4	5 7/8	5 1/2	5 1/2	5/8 x 3/16
13CVT	19	27	12	9	14 1/2	8	13 1/2	10 1/2	1	13/16		17 1/4	10 1/4	15 3/4	10 7/8	16 1/16	16 3/8	13 1/2	15	12 1/4	13 7/8	4 3/4	16 3/16	5/8	1 7/8	1 3/4	3/16 x 3/32	3	6 1/8	6	6	3/4 x 3/8
14CVT	22 1/2	30	13	10	16 5/8	9 3/4	15 1/2	11 1/2	1 1/4	1 5/16	1/4	20	11 3/4	16 1/8	12 3/4	17 13/16	18 3/8	15	16 1/2	13	15 5/8	6	19 1/16	3/4	2 1/16	2	3/16 x 3/32	3 1/4	6 5/8	6 1/2	6 1/2	3/4 x 3/8
15CVT	25 1/2	30	15	10 1/2	18.29	11	13 1/4	13 1/4	1 3/8	1 5/16	1/4	23	13 5/8	19 3/4	15 1/2	20 5/16	19 1/2	16 1/4	17 1/2	16	17 3/4	6	20 1/2	3/4	2 1/8	2	3/16 x 3/32	3 3/4	7 1/4	7	7	7/8 x 3/16

*Shaft diameter tolerance +.000 —.001. For construction purposes send for Certified Dimension Sheets.

PARTS LIST:

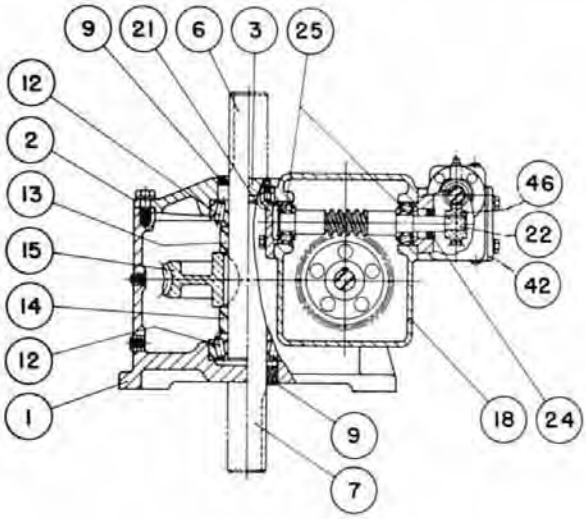

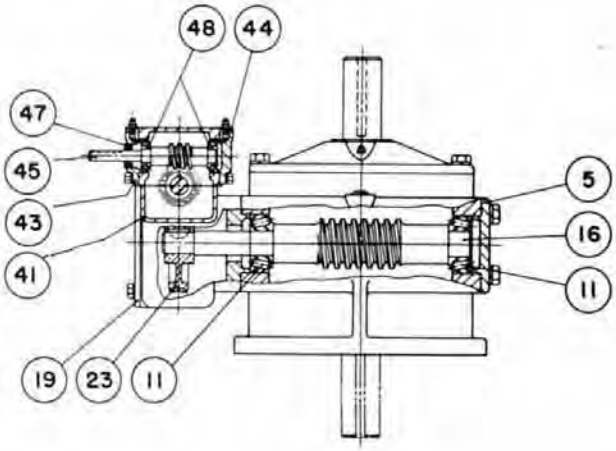

PARTS INDEX

Part No.	Description	Part No.	Description
1	Housing	22	Intermediate High Speed Worm and Shaft Integral
2	Slow Speed Cover — Open	23	Intermediate Speed Worm Gear — Bronze
3	Slow Speed Cover — Closed	24	Intermediate High Speed Oil Seal
5	Intermediate Cover — Closed	25	Roller Bearing Intermediate High Speed
5A	Intermediate Adapter — Not Shown — Used with Intermediate Cover — Closed. Unit 10 thru 15 Incl.	26	Intermediate Speed Locknut — Not Shown — Used on Units 10 thru 15 Incl.
6	Slow Speed Shaft — Top Extension		
7	Slow Speed Shaft — Bottom Extension		
9	Slow Speed Oil Seal	41	High Speed Attachment Housing
*11	Roller Bearing — Intermediate Slow Speed	42	High Speed Attachment Housing Cover
12	Roller Bearing — Slow Speed	43	High Speed Cap — Open
13	Slow Speed Spacer — Short	44	High Speed Cap — Closed
14	Slow Speed Spacer — Long	45	High Speed Worm and Shaft Integral
15	Slow Speed Worm Gear — Bronze	46	High Speed Worm Gear — Bronze
16	Intermediate Slow Speed Worm and Shaft Integral	47	High Speed Oil Seal
18	Intermediate Speed Attachment Housing	48	Roller Bearing — High Speed
19	Intermediate Speed Attachment Housing Cover		
21	Intermediate High Speed Cap — Closed		

* Series 5 thru 9 incl. use 2 Single Row Bearings. Series 10 thru 15 incl. use 1 Single Row and 1 Double Row Bearing.

4

SHAFT ARRANGEMENTS:

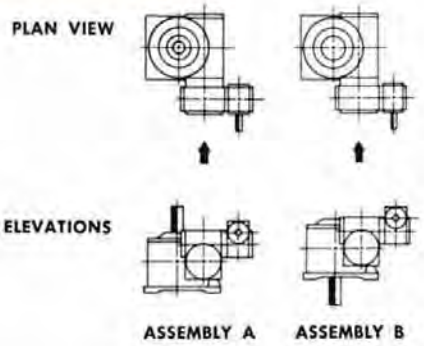

(A) The reducer housing is viewed looking at the intermediate attachment housing.

(B) No extra charge for the above assemblies provided the shaft extensions are of standard length.

(C) The input shaft may be driven in either direction.

(D) Many other assemblies available.

(E) Units may be mounted in any position, (ceiling, sidewall, etc.), if specified when ordered.

triple reduction—motorized and gearmotor

SERIES MCTT-MCTTW (WITH MOTOR)

GEAR RATIOS AVAILABLE 1000:1 THRU 180,000:1

COMPLETE TORQUE AND HP RATINGS ..... PAGES 152-222
OVERHUNG LOAD RATINGS .....PAGES 153-223
SERVICE FACTORS ..... PAGE 230
COUPLING ADAPTERS ..... PAGE 120
HYDRAULIC MOTOR ADAPTERS ..... PAGE 116

MCTTW

MSTT

CTTMW
See page 120.

MSFT

Additional Series Available: Series MSTT (Triple Reduction - Hollow Shaft) and MSFT (Triple Reduction - Hollow Shaft).
For MSTT & MSFT output & intermediate stage dimensions, See MSTD, page 96 and MSFD page 94 respectively.
For MSTT & MSFT input stage dimensions, see MCTT dimensions below. For construction purposes send for Certified Dimension sheets.

TABLE OF WEIGHTS *(Weights are without Motor)*

Unit	5	6	7	8	9	10	11	12	13	14	15
Net Weight	72	87	132	167	192	272	312	413	513	708	1290

Units #5, 6, 7, 8, 9, 10, and 12 are available with hollow output shafts, see page 94-96.
Alloy steel slow speed shafts available.
Hydraulic Motor Flanges available, see pages 116-118.
Units 5 through 15 available in "C" flange coupling type, see page 120.

DIMENSIONS: Dimensions apply to speed reducer only. For motor dimensions see next page.

Unit	C_1	C_2	C_3
5 CTT	3	2	1.33
6 CTT	3 1/2	2	1.33
7 CTT	4	2 3/4	1.33
8 CTT	4.6	2 3/4	1.33
9 CTT	5.167	2 3/4	1.33
10 CTT	6	3	2
11 CTT	6 1/2	3	2
12 CTT	7	3 1/2	2
13 CTT	7 3/4	3 1/2	2
14 CTT	8 3/4	4	2 3/4
15 CTT	9	5.167	2 3/4

CENTER DISTANCES

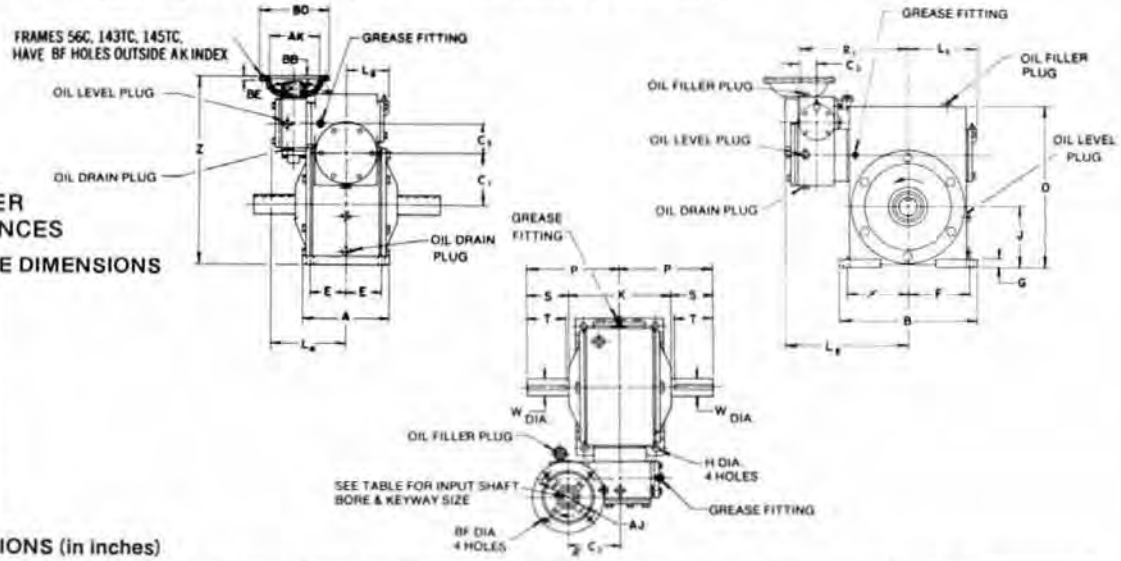

FRAME, KEYWAY and BORE DIMENSIONS

Frame No.	56C	143TC 145TC
AJ	5 7/8	5 7/8
AK	4 1/2	4 1/2
BB	3/16	3/16
BD	6 1/2	6 1/2
BE	3/4	3/4
BF	13/32	13/32
Keyway	3/16 x 3/32	3/16 x 3/32
Bore +.001 −.000	.6255	.8755

SPEED REDUCER DIMENSIONS (in inches)

Unit	A	B	E	F	G	H	J	K	L_1	L_2	L_3	L_4	O	P	R_1	R_2	Z	Slow Speed Shaft W*	S	T	Keyway	Maximum Frame Size
5MCTT	6	8 1/4	2 3/8	3 1/2	3/8	5/16	4	6	4 3/16	8 5/8	2 7/8	5 15/16	9 3/8	5 7/8	7.08	4	12 5/8	1 1/4	2 7/8	2 3/4	1/4 x 1/8	56C
6MCTT	6 1/4	9 1/4	2 5/8	4 1/8	3/8	5/16	4 1/2	7 1/4	4 5/8	9 1/8	2 7/8	5 15/16	11	7	7.58	4	13 5/8	1 1/2	3 3/8	3 1/4	3/8 x 3/16	56C
7MCTT	7	11	2 7/8	4 7/8	3/8	5/16	5	7 1/4	5 1/2	10 1/8	3 15/16	6 15/16	13	7 1/2	8.58	5	15 1/4	1 3/4	3 7/8	3 3/4	3/8 x 3/16	56C
8MCTT	8	12 1/2	3 1/4	5 1/2	3/4	11/16	5 1/2	9 1/4	6 1/4	11 1/8	3 15/16	6 15/16	14 1/2	8 1/2	9.58	5	16.35	1 3/4	3 7/8	3 3/4	3/8 x 3/16	56C
9MCTT	8 1/2	13 1/2	3 1/2	6	3/4	11/16	6	9 1/4	6 3/4	11 5/8	3 15/16	6 15/16	16	9	10.08	5	17.42	2	4 3/8	4 1/4	1/2 x 1/4	56C
10MCTT	10	15	4	6 1/2	3/4	13/16	7	10 1/4	8 1/16	13 3/16	4 3/16	7 15/16	18 1/2	9 3/4	11 1/2	5 3/4	19 5/8	2 1/4	4 5/8	4 1/2	1/2 x 1/4	145TC - 184C
11MCTT	10	16	4	7	3/4	13/16	7 1/2	10 3/4	8 5/16	13 7/16	4 3/16	7 15/16	20	10 1/2	11 3/4	5 3/4	20 5/8	2 1/2	5 1/8	5	5/8 x 5/16	145TC - 184C
12MCTT	12 1/2	18	5	7 1/2	1	1 1/16	8 1/2	12 1/4	9 1/2	15	4 5/8	8 7/16	21 1/2	11 3/4	13 1/2	6 1/4	22 5/8	2 3/4	5 5/8	5 1/2	5/8 x 5/16	145TC - 184C
13MCTT	14 1/2	19	5 3/4	8	1	1 1/16	9 3/8	14 3/4	10 1/4	15 15/16	4 5/8	8 7/16	23	13 1/2	14 1/4	6 1/4	24 1/8	3	6 1/8	6	3/4 x 3/8	145TC - 184C
14MCTT	16 1/2	21	6 3/4	9	1 1/4	1 5/16	10	16 3/4	11 3/4	18 7/16	5 1/2	9 11/16	25	15	15 5/8	7 1/4	26 5/8	3 1/4	6 5/8	6 1/2	3/4 x 3/8	145TC - 184C
15MCTT	19	23	7 1/2	8 1/4	1 3/4	1 5/16	13	18	13 5/8	21 1/8	6 3/4	11 3/16	29 13/16	16 1/4	18 5/8	8 3/4	31.67	3 3/4	7 1/4	7	7/8 x 7/16	145TC - 184C

*Slow speed shaft diameter tolerance +.000 −.001. For construction purposes send for Certified Dimension Sheets.

MOTOR DIMENSIONS:

H.P. @ 1800 RPM	1/6		1/4		1/3		1/2		3/4		1	1 1/2	2
Phase	Single *	Three	Single *	Three	Single *	Three	Single *	Three	Single *	Three	Three	Three	Three
AG	7 1/2	7 1/2	7 3/4	8 1/4	8 1/4	8 3/4	8 3/4	8 3/4	9 1/4	9 1/4	9 3/4	10 3/4	10 3/4
AP	5 21/32	5 21/32	5 21/32	5 21/32	6 31/64	6 31/64	6 31/64	6 31/64	6 31/64	6 31/64	6 31/64	6 31/64	6 31/64

*Single phase motor is capacitor start. Dimensions as shown are for open dripproof enclosure. Motors can be furnished open dripproof or enclosed.

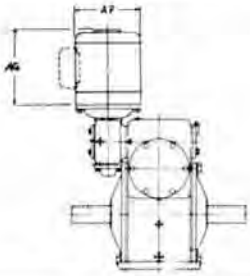

PARTS LIST:

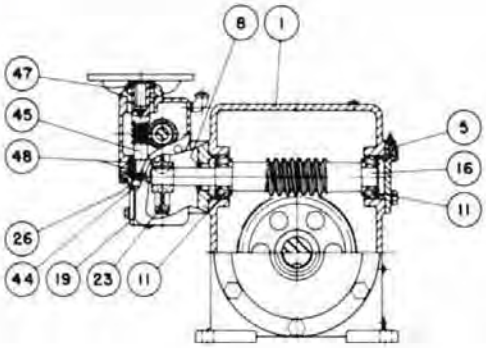

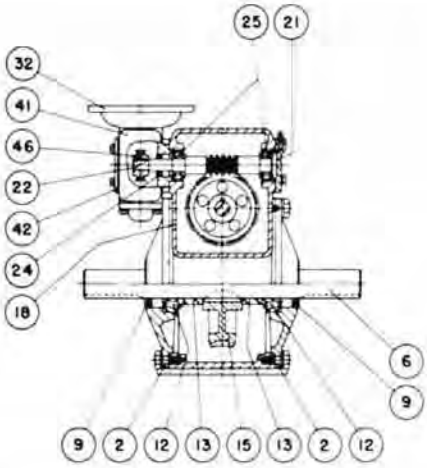

PARTS INDEX

Part No.	Description	Part No.	Description	Part. No.	Description
1	Housing	15	Slow Speed Worm Gear—Bronze	34	Intermediate Speed Locknut—Not Shown Used on Units 10 thru 15 Incl.
2	Slow Speed Cover—Open	16	Intermediate Slow Speed Worm and Shaft Integral	35	Intermediate Speed Lockwasher—Not Shown—Used on Units 10 thru 15 Incl.
3	Slow Speed Cover—Closed—Not Shown	18	Intermediate Speed Attachment Housing	41	High Speed Attachment Housing
5	Intermediate Cover—Closed	19	Intermediate Speed Attachment Housing Cover	42	High Speed Attachment Housing Cover
5A	Intermediate Adapter—Not Shown—Used with Intermediate Cover—Closed Unit 10 thru 15 Incl.	21	Intermediate High Speed Cap—Closed	44	High Speed Cap—Closed
6	Slow Speed Shaft—Double Extension	22	Intermediate High Speed Worm and Shaft Integral	45	High Speed Worm and Shaft Integral
7	Slow Speed Shaft—Single Extension—Not Shown	23	Intermediate Speed Worm Gear—Bronze	46	High Speed Worm Gear—Bronze
8	Oil Seal Intermediate Slow Speed	24	Intermediate High Speed Oil Seal	47	High Speed Oil Seal
9	Slow Speed Oil Seal	25	Roller Bearing Intermediate High Speed	48	Roller Bearing — High Speed
*11	Roller Bearing—Intermediate Slow Speed	26	High Speed Locknut		
12	Roller Bearing—Slow Speed	32	Motor Adapter		
13	Slow Speed Spacer	32B	Motor Adapter Spacer (Sizes 14 & 15 only)		

*Series 5 thru 9 incl. use 2 Single Row Bearings. Series 10 thru 15 incl. use 1 Single Row and 1 Double Row Bearing.

4

SHAFT ARRANGEMENTS:

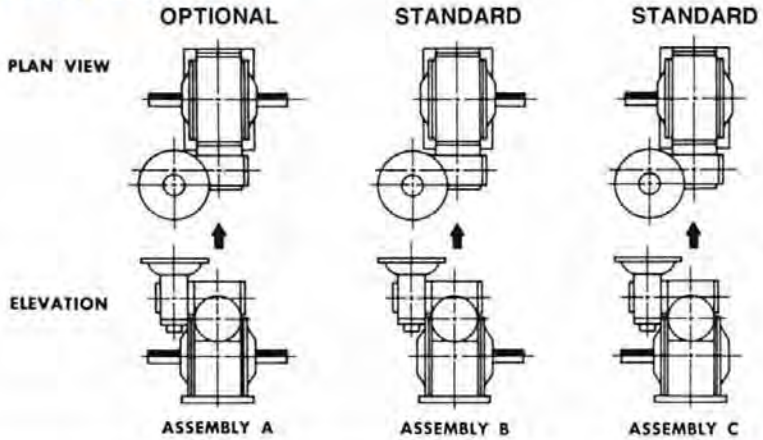

(A) The reducer housing is viewed looking at the intermediate attachment housing.

(B) No extra charge for the standard assemblies provided the shaft extensions are of standard length.

(C) The input shaft may be driven in either direction.

(D) Many other assemblies available —request assembly data.

(E) Units may be mounted in any position, (ceiling, sidewall, etc.), if specified when ordered.

WINSMITH

triple reduction — motorized and gearmotor

SERIES: MCVT-MCVTW (WITH MOTOR)

GEAR RATIOS AVAILABLE 1000:1 THRU 180,000:1

COMPLETE TORQUE AND HP RATINGS ..... PAGES 152-222
OVERHUNG LOAD RATINGS .....PAGES 153-223
SERVICE FACTORS ..... PAGE 230
COUPLING ADAPTERS ..... PAGE 120
HYDRAULIC MOTOR ADAPTERS ..... PAGE 116

CVTMW
See page 120.

TABLE OF WEIGHTS

Unit	5	6	7	8	9	10	11	12	13	14	15
Net Weight	77	92	137	172	212	317	402	508	703	933	1300

Weights are without motor.

Alloy steel slow speed shafts available.
Hydraulic Motor Flanges available, see pages 116-118.
Units 5 through *15* available in "C" flange coupling type, see page *120*.

Additional Series Available: Series MLT (Triple Reduction — Drop Bearing Type)

For MLT output and intermediate stage dimensions, see MLD page 100.

For MLT input stage dimensions, see MCVT below.

For construction purposes send for certified dimension sheets.

DIMENSIONS: Dimensions apply to speed reducer only. For motor dimension see next page.

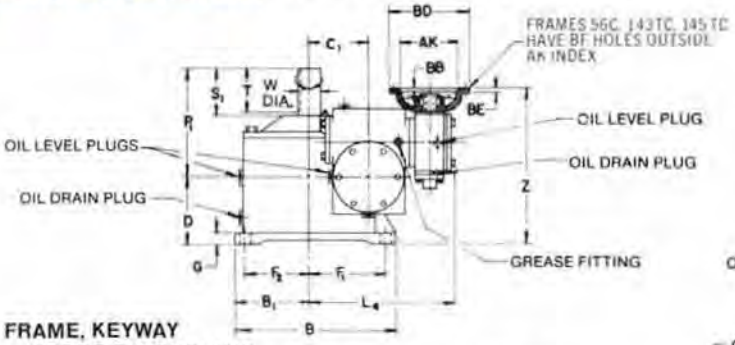

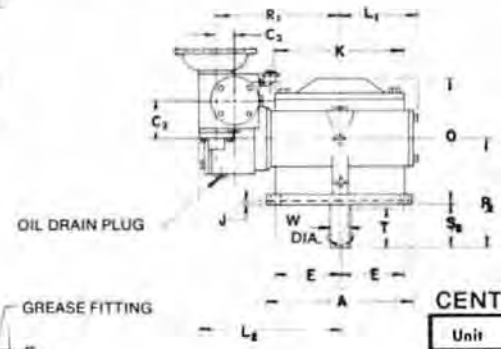

FRAME, KEYWAY and BORE DIMENSIONS

Frame No.	56C	143TC 145TC
AJ	5⅞	5⅞
AK	4½	4½
BB	3/16	3/16
BD	6½	6½
BE	3/16	3/16
BF	13/32	13/32
Keyway	3/16 x 3/32	3/16 x 3/32
Bore +.001 −.000	.6255	.8755

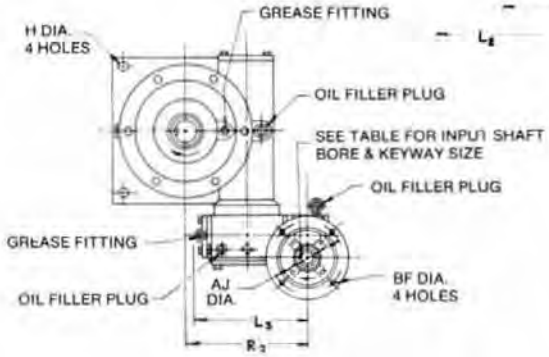

CENTER DISTANCES

Unit	C_1	C_2	C_3
5CVT	3	2	1.33
6CVT	3½	2	1.33
7CVT	4	2⅝	1.33
8CVT	4.6	2⅝	1.33
9CVT	5.167	2⅝	1.33
10CVT	6	3	2
11CVT	6½	3	2
12CVT	7	3½	2
13CVT	7⅝	3½	2
14CVT	8⅛	4	2⅝
15CVT	9	5.167	2⅝

SPEED REDUCER DIMENSIONS (in inches)

Unit	A	B	B_1	D	E	F_1	F_2	G	H	J	K	L_1	L_2	L_3	L_4	O	P_1	P_2	R_1	R_2	Z	Slow Speed Shaft W*	S_1	S_2	T	Keyway	Maximum Frame Size
5MCVT	7¼	8¾	3¾	3¾	3⅛	4½	3¼	⅜	9/16	⅛	6¾	4 5/16	8⅝	6⅞	8 15/16	6¾	5⅞	6½	7.08	7	9⅜	1¼	2⅜	2¾	2¾	¼ x ⅛	56C
6MCVT	8	10	4¼	4	3½	5¼	3¾	⅜	9/16	3/16	7½	4⅝	9⅛	6⅞	9 7/16	7⅝	7	7¼	7.58	7½	9⅝	1½	3⅜	3¼	3¼	⅜ x 3/16	56C
7MCVT	9½	10⅞	4¾	4½	4⅛	5½	4⅛	⅝	9/16	0	8 5/16	5½	10⅛	8 13/16	10 15/16	8⅛	7½	8¼	8.58	9	10¾	1¾	3⅞	3¾	3¾	⅜ x 3/16	56C
8MCVT	11½	12½	5¾	5	5	6	5	¾	11/16	5/16	10¼	6¼	11⅛	8 13/16	11 5/16	9⅝	8½	8¾	9.58	9.6	11¼	1¾	3⅞	3¾	3¾	⅜ x 3/16	56C
9MCVT	12½	16¾	7½	5½	5½	8½	6¾	¾	11/16	3/16	11⅝	6¾	11⅝	8 13/16	12⅛	10⅛	9	9¾	10.08	10.167	11¾	2	4⅜	4¼	4¼	½ x ¼	56C
10MCVT	14	20½	8½	6	6	11	7½	¾	13/16	¼	12⅞	8 1/16	13 5/16	9 13/16	13 15/16	11⅛	9¾	10½	11½	11¾	12⅝	2¼	4⅝	4½	4½	½ x ¼	145TC - 184C
11MCVT	14½	22	9⅜	7	6¼	11⅜	8⅜	¾	13/16	3/16	13½	8 5/16	13 7/16	9 13/16	14 7/16	12⅜	10½	12	11¾	12¼	13⅝	2½	5⅛	5	5	⅝ x 5/16	145TC - 184C
12MCVT	17½	25	11⅛	8	7½	12½	10	1	1 1/16	3/16	15¾	9½	15 5/16	10⅞	15 7/16	14⅛	11¾	13½	13½	13¼	15⅛	2¾	5⅜	5½	5½	⅝ x 5/16	145TC - 184C
13MCVT	19	27	12	9	8	13½	10½	1	1 1/16	5/16	17¼	10¼	15 15/16	10⅞	16 1/16	16⅜	13½	15	14¼	13⅞	16⅛	3	6⅛	6	6	¾ x ⅜	145TC - 184C
14MCVT	22½	30	13	10	9¾	15½	11½	1¼	1 5/16	¼	20	10¾	18 1/16	12¾	17 13/16	18⅜	15	16½	15⅝	15⅜	18½	3¼	6⅝	6½	6½	¾ x ⅜	145TC - 184C
15MCVT	25½	30	15	10½	11	13¼	13¼	1⅜	1 5/16	¼	23	13⅝	21⅛	15½	20 1/16	19½	16¼	17½	18⅝	17¾	20 3/16	3¾	7¼	7	7	⅞ x 7/16	145TC - 184C

*Shaft diameter tolerance +.000 −.001. **For construction purposes send for Certified Dimension Sheets.**

MOTOR DIMENSIONS:

H.P. @ 1800 RPM	1/6		1/4		1/3		1/2		3/4		1	1 1/2	2
Phase	Single *	Three	Single *	Three	Single *	Three	Single *	Three	Single *	Three	Three	Three	Three
AG	7 1/2	7 1/2	7 3/4	8 1/4	8 1/4	8 3/4	8 3/4	8 3/4	9 1/4	9 1/4	9 3/4	10 3/4	10 3/4
AP	5 21/32	5 21/32	5 21/32	5 21/32	6 31/64	6 31/64	6 31/64	6 31/64	6 31/64	6 31/64	6 31/64	6 31/64	6 31/64

*Single phase motor is capacitor start. Dimensions as shown are for open dripproof enclosure. Motors can be furnished open dripproof or enclosed.

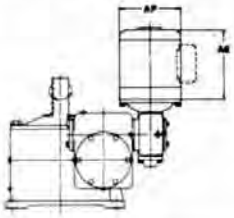

PARTS LIST:

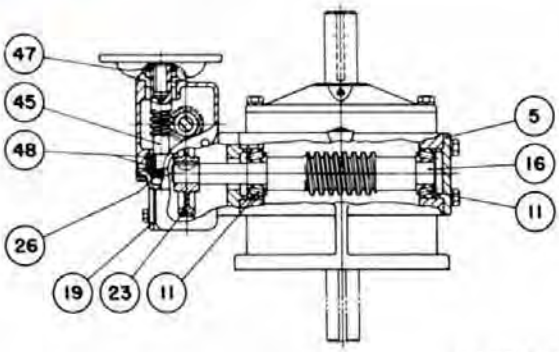

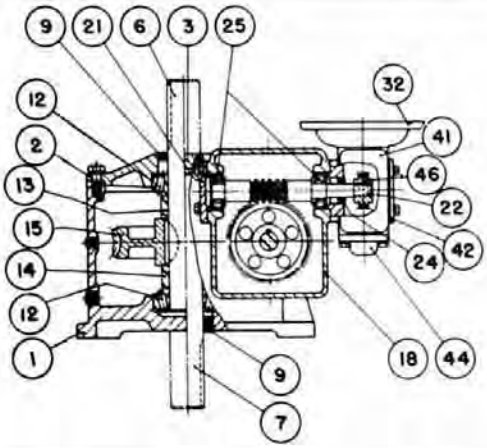

PARTS INDEX

Part No.	Description
1	Housing
2	Slow Speed Cover—Open
3	Slow Speed Cover—Closed
5	Intermediate Cover—Closed
5A	Intermediate Adapter—Not Shown—Used with Inter. Cover—Closed—Unit 10 thru 15 Incl.
6	Slow Speed Shaft—Top Extension
7	Slow Speed Shaft—Bottom Extension
9	Slow Speed Oil Seal
*11	Roller Bearing—Intermediate Slow Speed
12	Roller Bearing—Slow Speed
13	Slow Speed Spacer—Short
14	Slow Speed Spacer—Long
15	Slow Speed Worm Gear—Bronze
16	Intermediate Slow Speed Worm and Shaft Integral
18	Intermediate Speed Attachment Housing
19	Intermediate Speed Attachment Housing Cover
21	Intermediate High Speed Cap—Closed
22	Interemdiate High Speed Worm and Shaft Integral
23	Intermediate Speed Worm Gear—Bronze
24	Intermediate High Speed Oil Seal
25	Roller Bearing Intermediate High Speed
26	High Speed Locknut
32	Motor Adapter
32B	Motor Adapter Spacer (Sizes 14 & 15 only)
34	Intermediate Speed Locknut—Not Shown Used on Units 10 thru 15 Incl.
35	Intermediate Speed Lockwasher—Not Shown—Used on Units 10 thru 15 Incl.
41	High Speed Attachment Housing
42	High Speed Attachment Housing Cover
44	High Speed Cap—Closed
45	High Speed Worm and Shaft Integral
46	High Speed Worm Gear—Bronze
47	High Speed Oil Seal
48	Roller Bearing—High Speed

*Series 5 thru 9 incl. use 2 Single Row Bearings. Series 10 thru 15 incl. use 2 Single Row Tapered Roller Bearings.

SHAFT ARRANGEMENTS:

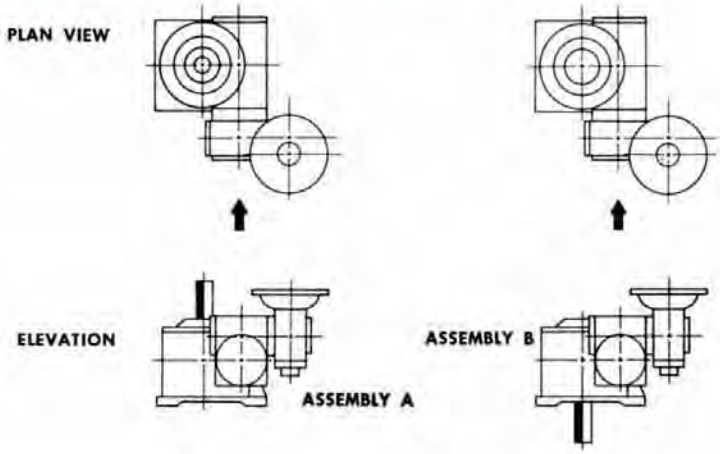

(A) The reducer is viewed looking at the intermediate attachment housing.

(B) No extra charge for the above assemblies provided the shaft extensions are of standard length.

(C) The input shaft may be driven in either direction.

(D) Many other assemblies available, request assembly data.

(E) Units may be mounted in any position, (ceiling, sidewall, etc.), if specified when ordered.

4

WINSMITH

torque control

SERIES: CT1-CV1

11 Sizes
Models 5 THRU 15
For Winsmith Worm Gear Speed Reducers and Gearmotors

"1" Series Torque Control Unit
5c - 9c
10c - 14c
15c

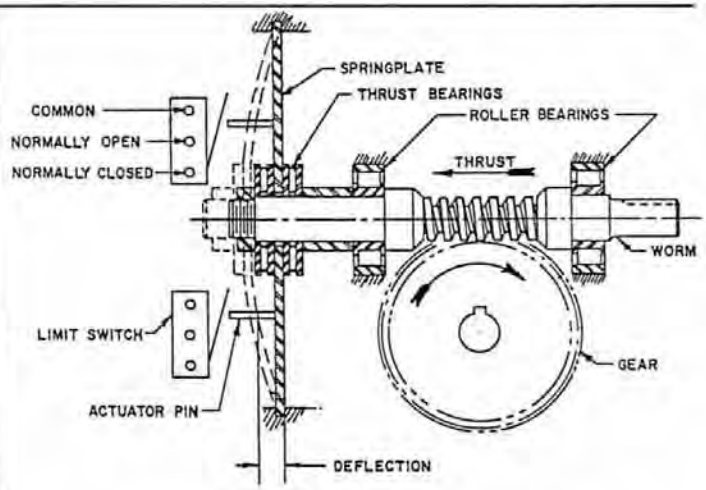

Winsmith Torque Controls are available for the following Winsmith units:

Torque Controls	Single & Double Reduction Speed Reducers & Gearmotors	Triple Reduction
5 thru 15 CT1 & CV1	5 thru 15 CT - CV CTX-CVX CTD-CVD MCTD-MCVD L, LX, & LD-MLD	5 - 15 CTT-CVT MCTT-MCVT
5, 6, 7, 8, 9, 10 & 12 SF1, SFD1	5, 6, 7, 8, 9, 10, 12 SF & ST SFD, STD MSFD, MSTD	5-15 STT-SFT MSTT-MSFT

Winsmith Torque Controls are identified by the same model numbers as the speed reducers and gearmotors for which they are designed.

WINSMITH TORQUE CONTROLS are designed as optional equipment for specific models of Winsmith Speed Reducers and Gearmotors—single, double and triple reduction. They are torque limiting devices which protect the driving and driven equipment as well as the speed reducer against overload damage. Torque Controls are widely used in agitator, batching and mixing applications where varying density of material creates a constant overload hazard.

Winsmith Torque Controls cut machine downtime to a minimum or eliminate it completely. Installed with a reversing control panel, the machine can be reversed far enough to free the obstruction — the Torque Control automatically resets — and then the operation is resumed in the normal direction of rotation.

With Winsmith Torque Control, when the output torque of the reducer or gearmotor exceeds a predetermined limit, a micro switch instantly breaks the motor control circuit. These controls can be supplied for either one or two directions of rotation. In single direction of operation, the Torque Control senses two torques — one to energize an alarm circuit, the other to actuate the motor cut-off switch. The alarm circuit is actuated at the rated output torque of the reducer, while the motor cut-off torque is set for approximately 25% above this rating. When the reducer operates in two directions, the control still senses two torques — but only one in each direction. They are each used to actuate motor cut-off switches, thus providing overload protection in both directions of rotation.

Winsmith Torque Controls have been in service for many years in all types of applications, notably water and sewage treatment, with marked success. They are soundly engineered and ruggedly constructed with a minimum number of moving or wearing parts. Factory set to predetermined torque limits, Winsmith Torque Controls do not have to be reset or adjusted in the field for the life of the reducer. They will perform satisfactorily in all kinds of environment — both indoors and outdoors. Weather has no effect on the performance of Winsmith Torque Controls.

DIMENSIONS:

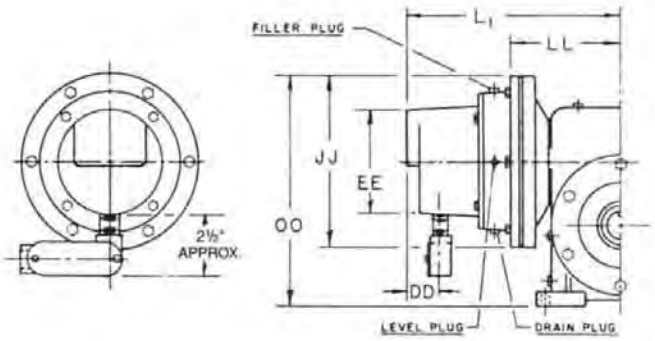

CT I

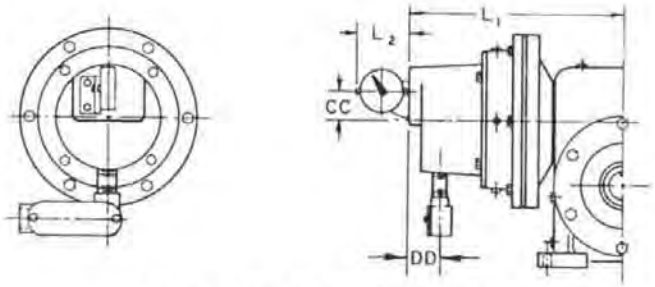

CT 2 WITH DIAL INDICATOR

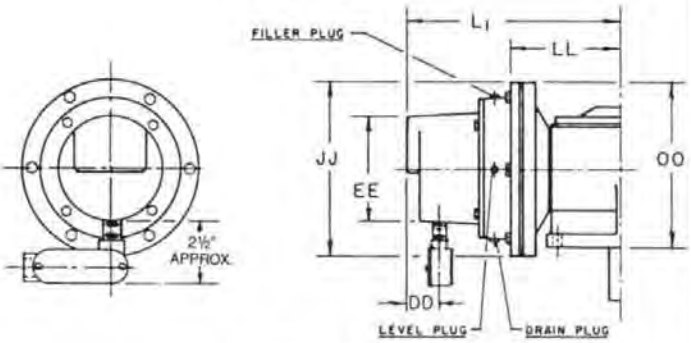

CV I

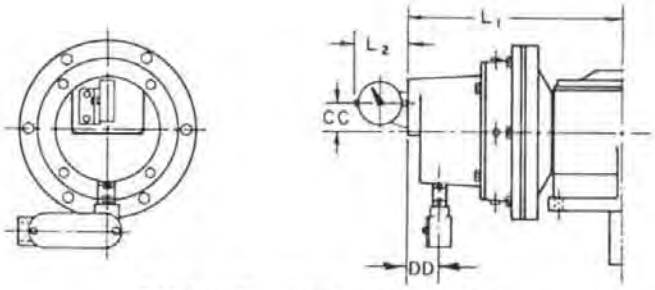

CV 2 WITH DIAL INDICATOR

TORQUE CONTROL DIMENSIONS

UNIT	EE	DD	JJ	L_1	LL	CT I OO	CV I OO
5	5	1 1/2	8 1/4	10 9/16	5 1/2	11 1/8	7 7/8
6	5	1 1/2	8 1/4	10 13/16	5 7/8	12 1/8	8 1/8
7	5	1 1/2	8 1/4	11 13/16	6 3/4	13 1/8	8 3/8
8	5	1 1/2	8 1/4	12 9/16	7 1/2	14 1/4	9 1/8
9	5	1 1/2	8 1/4	13 1/16	8	15 5/16	9 3/8
10	5 7/8	1 1/2	10	14 11/16	9 3/16	18	11
11	5 7/8	1 1/2	10	15	9 1/2	19	12
12	5 7/8	1 1/2	10	16 3/16	10 11/16	20 1/2	13
13	5 7/8	1 1/2	10	16 7/8	11 3/8	22	14
14	5 7/8	1 1/2	10	18 5/16	12 13/16	23 1/8	15
15	6 1/2	1 1/2	13	20 9/16	14 13/16	28 1/2	17

ALL DIMENSIONS IN INCHES

DIAL INDICATOR DIMENSIONS

ALL OTHER DIMENSIONS SAME AS STANDARD CT I & CV I

UNIT	L_1	L_2	CC	DD
5	10 7/16	2 7/8	1 1/2	1 3/8
6	10 13/16	2 7/8	1 1/2	1 3/8
7	11 11/16	2 7/8	1 1/2	1 3/8
8	12 7/16	2 7/8	1 1/2	1 3/8
9	12 15/16	2 7/8	1 1/2	1 3/8
10	14 9/16	2 7/8	2	1 3/8
11	14 7/8	2 7/8	2	1 3/8
12	16 1/16	2 7/8	2	1 3/8
13	16 3/4	2 7/8	2	1 3/8
14	18 3/16	2 7/8	2	1 3/8
15	20 7/16	2 7/8	2 1/4	1 3/8

ALL DIMENSIONS IN INCHES

For construction purposes send for Certified Dimension Sheets.

NOTE: On single reduction units, the coupling between the high speed shaft and the motor shaft must be the type that allows up to 1/32" of lateral movement. A belt drive, spur or helical gear drive is also satisfactory. **A RIGID SLEEVE TYPE COUPLING CANNOT BE USED.**

CALL WINSMITH AND ASK US ABOUT OUR CUSTOM CAPABILITIES

716-592-9311

CUSTOM DRIVES

EXAMPLES OF THE DIVERSE CAPABILITIES OF WINSMITH TO MAKE A CUSTOM DRIVE TO MEET YOUR EXACTING DEMANDS.

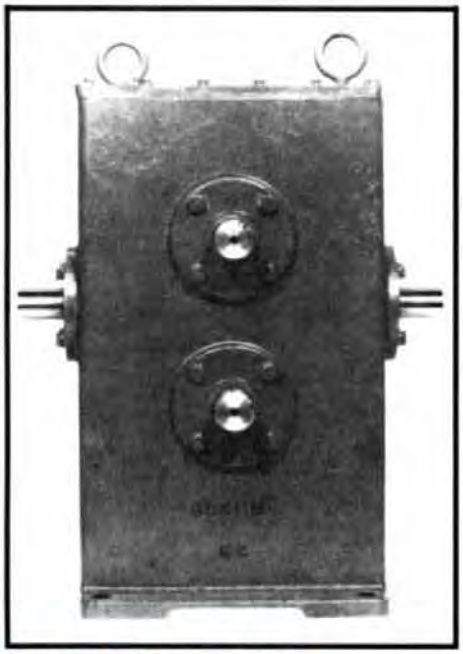

PINCH ROLL REDUCER

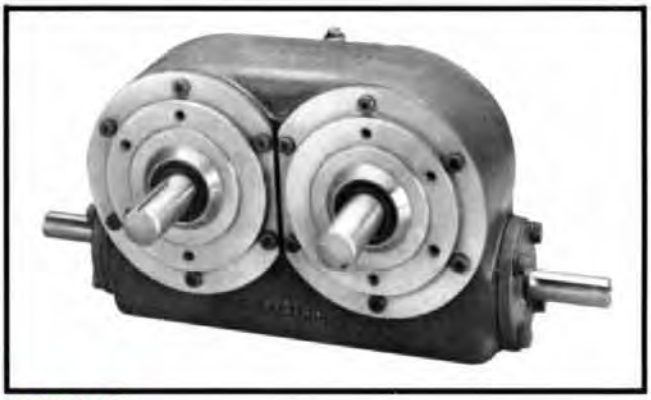

WINTWIN

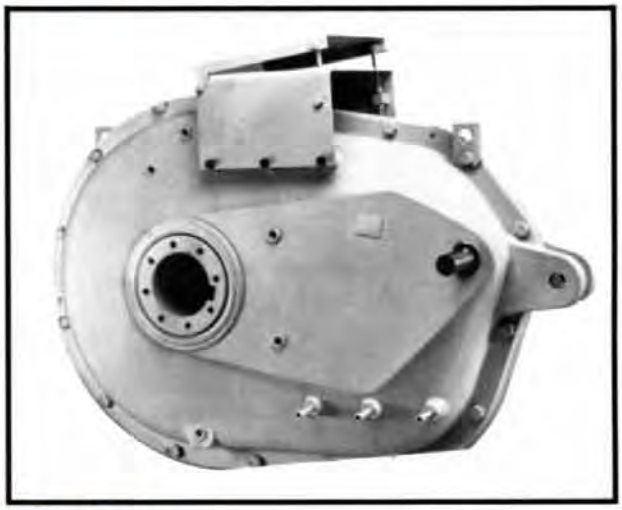

RBC DRIVE

D.O.E. SOLAR DRIVE

NEXRAD ANTENNA DRIVE

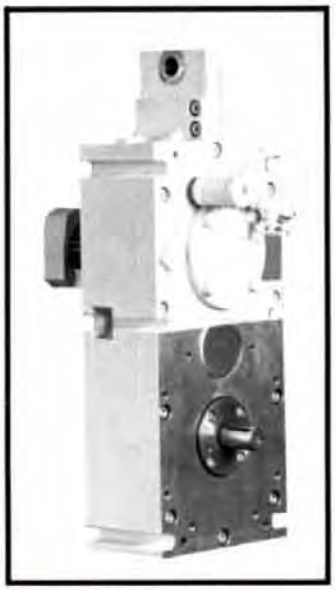

AEL ANTENNA DRIVE

single reduction flanged for hydraulic motors

SERIES: MHCT

GEAR RATIOS AVAILABLE 5:1 THRU 60:1

COMPLETE TORQUE AND HP RATINGS ..... PAGES 122-150
OVERHUNG LOAD RATINGS ..... PAGES 123-223
SERVICE FACTORS ..... PAGE 230
COUPLING ADAPTERS ..... PAGE 120
HYDRAULIC MOTOR ADAPTERS ..... PAGE 116

TABLE OF WEIGHTS

Unit	4	5	6	7	8
Net Weight	36	53	67	94	130

Alloy steel slow speed shafts available.

DIMENSIONS:

For dimensions of Fan Cooled units, see page 46.

S.A.E. Mounting Flange, Shaft Bore & Keyway Size	S.A.E MOUNTING FLANGE TYPES			
	AA (50-2)	A (B2-2)	B (101-2)	B (101-4)
	2 Bolt Flange		2 Bolt Flange	4 Bolt Flange
A_1	2	3¼	4	4
Unit Sizes	4, 5, 6, 7, 8	4, 5, 6, 7, 8	6, 7, 8	6, 7, 8
B_2 Sizes 4, 5	4	5	6¾	6¾
B_2 Sizes 6, 7, 8	4½	5	6¾	6¾
K_4	3¼	4 5/16	5¾	—
K_5	1⅝	2 3/32	2⅞	—
M_1 Tap	⅜-16x⅝DP	⅜-16x⅝DP	½-13x 15/16DP	½-13x 15/16DP
S_3	—	—	—	3.536
S_4	—	—	—	1.768
W_1	5/16	5/16	7/16	7/16
Keyway	⅛x 1/16	5/32x 5/64	¼x⅛	¼x⅛
Bore −.000 +.001 △	.5005	.6255*	.8755°	.8755°

△Use of the optional longer hydraulic motor shaft is recommended.
* .750 bore also available.
° 1.000 bore also available.

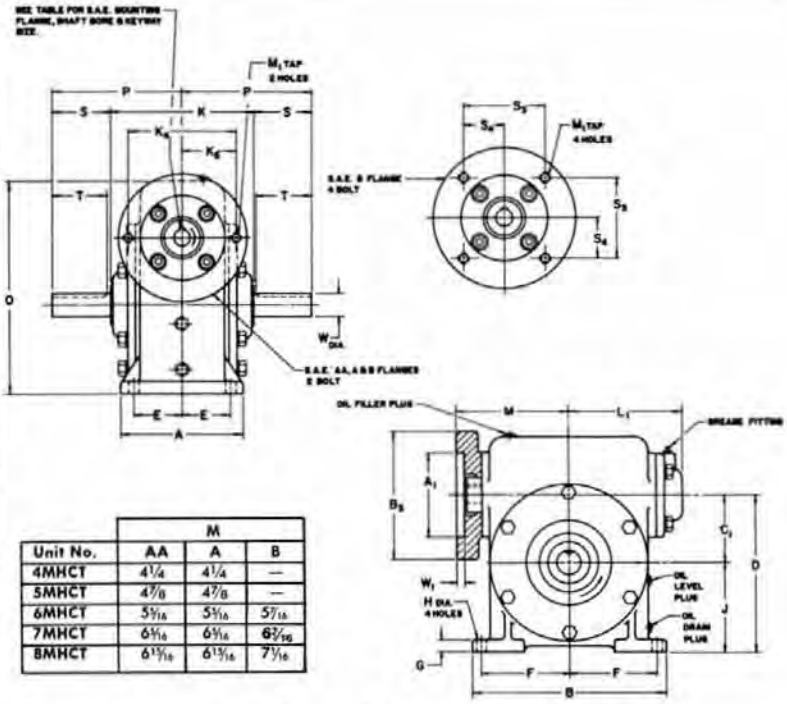

Unit No.	M AA	M A	M B
4MHCT	4¼	4¼	—
5MHCT	4⅞	4⅞	—
6MHCT	5 9/16	5 9/16	5 7/16
7MHCT	6 9/16	6 9/16	6 27/32
8MHCT	6 13/16	6 13/16	7 1/16

SPEED REDUCER DIMENSIONS (in inches)

Unit No.	A	B	C_1	D	E	F	G	H	J	K	L_1	O	P	Slow Speed Shaft Dimensions W*	S	T	Keyway
4MHCT	4¾	7½	2⅝	6⅛	1⅞	3¼	½	13/32	3½	5⅜	4¼	8⅜	5⅜	1	2 11/16	2½	¼ x ⅛
5MHCT	6	8¼	3	7	2⅜	3½	⅜	9/16	4	6	4½	9⅝	5⅞	1¼	2⅞	2¾	¼ x ⅛
6MHCT	6¼	9¼	3½	8	2⅝	4⅛	⅝	9/16	4½	7¼	5	11	7	1½	3⅜	3¼	⅜ x 3/16
7MHCT	7	11	4	9	2⅞	4⅞	⅝	9/16	5	7¼	5⅞	13	7½	1¾	3⅞	3¾	⅜ x 3/16
8MHCT	8	12½	4.6	10.1	3¼	5½	¾	11/16	5½	9¼	6⅝	14½	8½	1¾	3⅞	3¾	⅜ x 3/16

PARTS LIST:

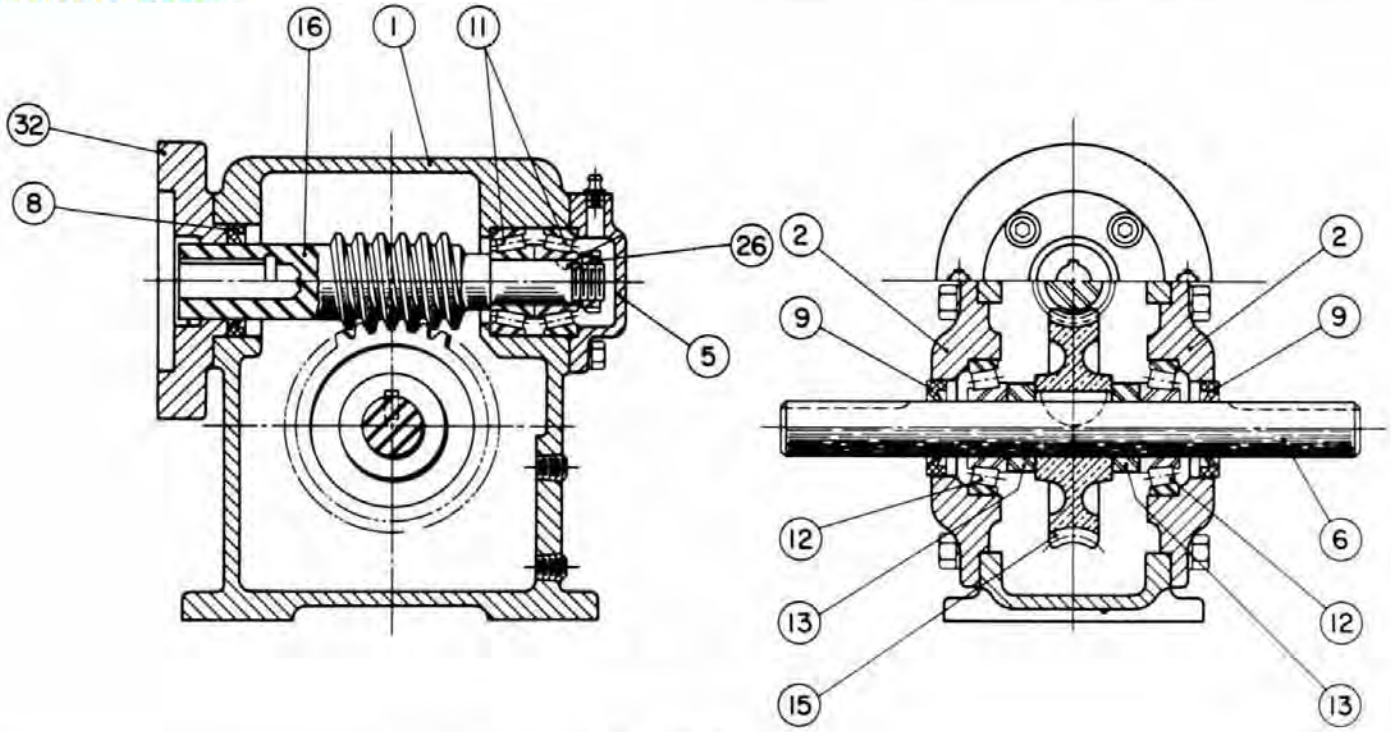

PARTS INDEX

Part No.	Description
1	Housing
2	Slow Speed Cover—Open
3	Slow Speed Cover—Closed—Not Shown
5	High Speed Cover—Closed
6	Slow Speed Shaft—Double Extension
7	Slow Speed Shaft—Single Extension Not Shown
8	Oil Seal High Speed—Motor Adapter End
9	Oil Seal Slow Speed
11	Roller Bearings High Speed
12	Roller Bearings Slow Speed
13	Slow Speed Spacer
15	Slow Speed Worm Gear—Bronze
16	High Speed Worm and Shaft Integral
26	High Speed Locknut
32	Motor Adapter

SHAFT ARRANGEMENTS:

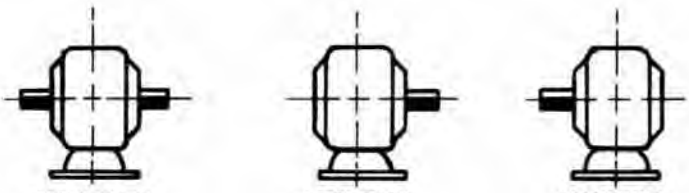

ASSEMBLY LR
OPTIONAL

ASSEMBLY R
STANDARD

ASSEMBLY L
STANDARD

(A) When facing the input shaft, slow speed shaft is to left (L), or right (R) or both (LR).

(B) No extra charge for these standard assemblies provided shaft extensions are of standard length.

(C) The input shaft may be driven in either direction.

(D) Units may be mounted in any position, (ceiling, sidewall, etc.), if specified when ordered.

WINSMITH

single reduction flanged for hydraulic motors

SERIES: MHCV

GEAR RATIOS AVAILABLE 5:1 THRU 60:1
COMPLETE TORQUE AND HP RATINGS ..... PAGES 122-150
OVERHUNG LOAD RATINGS ..... PAGES 123-223
SERVICE FACTORS ..... PAGE 230
COUPLING ADAPTERS ..... PAGE 120
HYDRAULIC MOTOR ADAPTERS ..... PAGE 116

TABLE OF WEIGHTS

Unit	4	5	6	7	8
Net Weight	36	50	69	92	127

Ailoy steel slow speed shafts available.

DIMENSIONS:

S.A.E. Mounting Flange, Shaft Bore & Keyway Size	S.A.E MOUNTING FLANGE TYPES			
	AA (50-2)	A (B2-2)	B (101-2)	B (101-4)
	2 Bolt Flange		2 Bolt Flange	4 Bolt Flange
A_1	2	3¼	4	4
Unit Sizes	4, 5, 6, 7, 8	4, 5, 6, 7, 8	6, 7, 8	6, 7, 8
B_3 Sizes 4, 5	4	5	6¾	6¾
B_3 Sizes 6, 7, 8	4½	5	6¾	6¾
K_4	3¼	4 3/16	5¾	—
K_5	1⅜	2 3/32	2⅞	—
M_1 Tap	⅜-16×⅝DP	⅜-16×⅝DP	½-13×15/16DP	½-13×15/16DP
S_2	—	—	—	3.536
S_4	—	—	—	1.768
W_1	3/16	3/16	7/16	7/16
Keyway	⅛×1/16	3/32×3/64	¼×⅛	¼×⅛
Bore −.000△ +.001	.5005	.6255*	.8755°	.8755°

△Use of the optional longer hydraulic motor shaft is recommended.
* .750 bore also available.
° 1.000 bore also available.

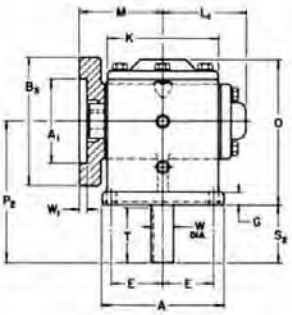

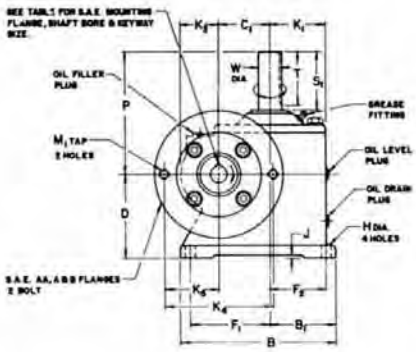

Unit No.	M AA	M A	M B
4MHCV	4¼	4¼	—
5MHCV	4⅞	4⅞	—
6MHCV	5 5/16	5 5/16	5 7/16
7MHCV			
8MHCV	6 13/16	6 13/16	7 1/16

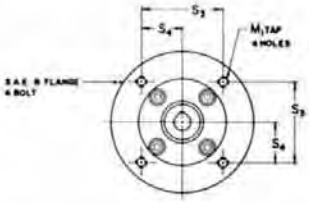

SPEED REDUCER DIMENSIONS (in inches)

Unit No.	A	B	B_1	C_1	D	E	F_1	F_2	G	H	J	K	K_1	K_2	L_1	O	P_1	P_2	Slow Speed Shaft Dimensions W*	S_1	S_2	T	Keyway
4MHCV	6¾	7½	3¼	2⅝	3⅝	2⅞	3⅞	2⅞	½	13/32	3/16	5⅞	2 11/16	1⅝	4¼	6 1/16	5⅜	6⅛	1	2 11/16	2½	2½	¼ × ⅛
5MHCV	7¼	8¾	3¾	3	3¾	3⅛	4½	3¼	⅝	9/16	1/8	6¾	3⅜	2	4½	6¾	5⅞	6½	1¼	2⅞	2¾	2¾	¼ × ⅛
6MHCV	8	10	4¼	3½	4	3½	5¼	3¾	⅝	9/16	3/16	7½	3¾	2 1/16	5	7⅝	7	7¼	1½	3⅜	3¼	3¼	3/8 × 3/16
7MHCV	9½	10⅞	4¾	4	4½	4⅛	5½	4⅛	⅝	9/16	0	8 9/16	4 5/16	2 5/16	5⅞	8⅛	7½	8¼	1¾	3⅞	3¾	3¾	3/8 × 3/16
8MHCV	11½	12½	5¾	4.6	5	5	6	5	¾	11/16	5/16	10¼	5⅛	2 9/16	6⅝	9⅝	8½	8¾	1¾	3⅞	3¾	3¾	3/8 × 3/16

*Shaft diameter tolerances + .000 − .001. For construction purposes send for Certified Dimension Sheets.

PARTS LIST:

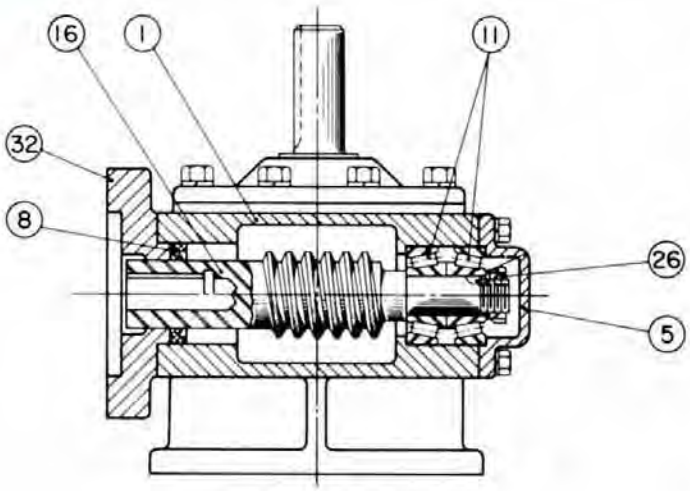

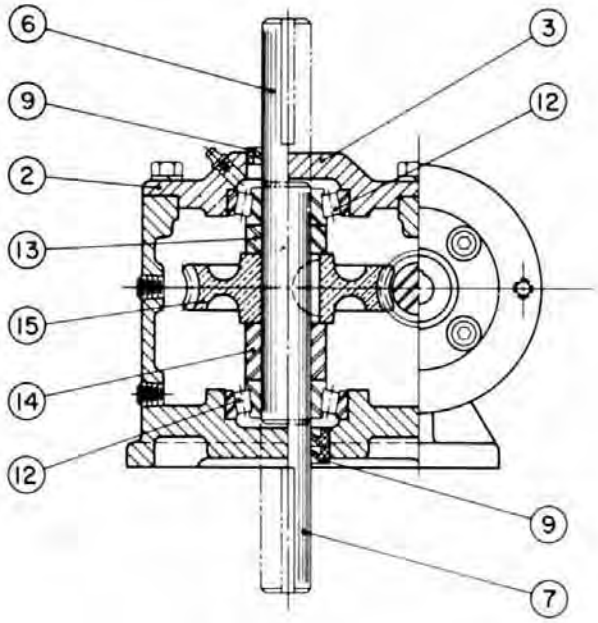

PARTS INDEX

Part No.	Description	Part. No.	Description
1	Housing	12	Roller Bearings Slow Speed
2	Slow Speed Cover—Open	13	Slow Speed Spacer—Short
3	Slow Speed Cover—Closed	14	Slow Speed Spacer—Long
5	High Speed Cover—Closed	15	Slow Speed Worm Gear—Bronze
6	Slow Speed Shaft—Top Extension	16	High Speed Worm and Shaft Integral
7	Slow Speed Shaft—Bottom Extension	26	High Speed Locknut
8	Oil Seal High Speed—Motor Adapter End	32	Motor Adapter
9	Oil Seal Slow Speed		
11	Roller Bearings High Speed		

SHAFT ARRANGEMENTS:

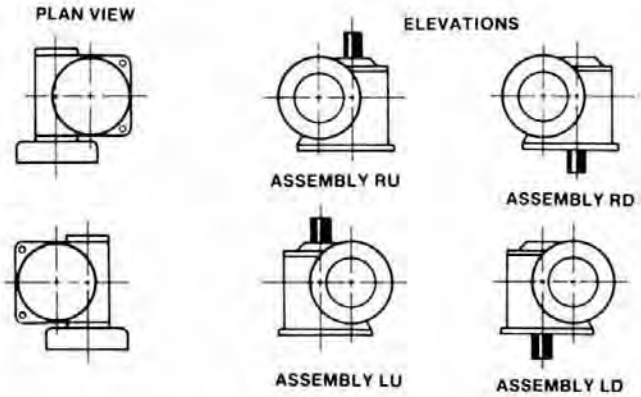

(A) The reducer is viewed looking at the high speed shaft.
(B) No extra charge for illustrated assemblies provided shaft extensions are standard. Top and bottom shaft extensions can be supplied at additional charge.
(C) The input shaft may be driven in either direction.
(D) Units may be mounted in any position, (ceiling, sidewall, etc.) if specified when ordered.

motorized—coupling type—speed reducers

FOR UNITS CBM, CTM, CVM, CBDM, CTDM, CVDM, FCTM, FCVM, STM, SFM, FSTM, FSFM, STDM, SFDM, LM, LDM, CTTM, CVTM, STTM and SFTM.

For motor frames 56C, 182C, 184C, 143TC & 145TC.

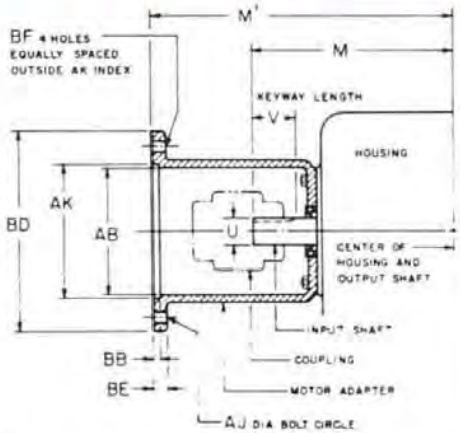

For motor frames 213C, 215C, 182TC, 184TC, 254UC, 256UC, 254TC & 256TC.

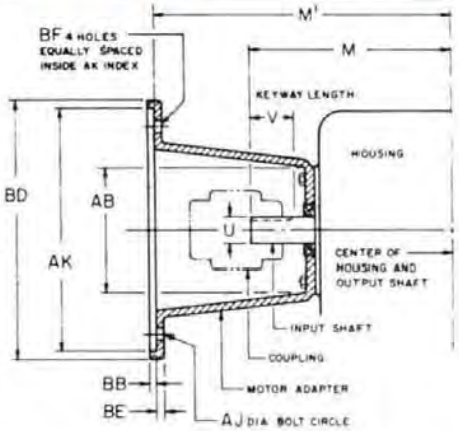

UNIT SIZE			OLD N.E.M.A. FRAME SIZE	NEW N.E.M.A. FRAME SIZE	AB	AJ	AK	BB	BD	BE	BF	U	V	M	M'	KEYWAY
SINGLE REDUCTION	DOUBLE REDUCTION	TRIPLE REDUCTION														
1	2 THRU 4	5 THRU 9	56C	56C	3	5⅞	4.5005/4.5025	3/16	6⅝	5/16	13/32	½	1½	4⅛	6¾	⅛ × 1/16
2			56C, 182C & 184C	56C, 143TC & 145TC	3¾	5⅞	4.5005/4.5025	3/16	6⅝	⅜	13/32	⅝	1¾	4¾	7⅜	3/16 × 3/32
3	5 THRU 6	10 THRU 13	56C, 182C & 184C	56C, 143TC & 145TC	3¾	5⅞	4.5005/4.5025	3/16	6⅝	⅜	13/32	⅝	1¾	4¾	7⅜	3/16 × 3/32
4	7 THRU 9	14 THRU 15	56C, 182C & 184C	56C, 143TC & 145TC	3¾	5⅞	4.5005/4.5025	3/16	6⅝	⅜	13/32	¾	2	6	8⅜	3/16 × 3/32
4	7 THRU 9	14 THRU 15	213C & 215C	182TC & 184TC	3¾	7¼	8.5005/8.5025	3/16	9	½	17/32	¾	2	6	9¼	3/16 × 3/32
5	10 THRU 11		58C, 182C & 184C	56C, 143TC & 145TC	4¼	5⅞	4.5005/4.5025	3/16	6⅝	⅜	13/32	⅞	2¼	6½	9⅛	3/16 × 3/32
5	10 THRU 11		213C & 215C	182TC & 184TC	4¼	7¼	8.5005/8.5025	3/16	9	½	17/32	⅞	2¼	6½	10⅛	3/16 × 3/32
6	12 THRU 13		56C, 182C & 184C	56C, 143TC & 145TC	4	5⅞	4.5005/4.5025	3/16	6⅝	⅜	13/32	1	2½	7 1/16	10⅛	¼ × ⅛
6	12 THRU 13		213C & 215C	182TC & 184TC	4½	7¼	8.5005/8.5025	3/16	9	½	17/32	1	2½	7 1/16	11 3/16	¼ × ⅛
7	14		56C, 182C & 184C	56C, 143TC & 145TC	4	5⅞	4.5005/4.5025	3/16	6⅝	⅜	13/32	1	2½	8	11	¼ × ⅛
7	14		213C & 215C	182TC & 184TC	4½	7¼	8.5005/8.5025	3/16	9	½	17/32	1	2½	8	12 1/16	¼ × ⅛
8			56C, 182C & 184C	56C, 143TC & 145TC	4	5⅞	4.5005/4.5025	3/16	6⅝	⅜	13/32	1⅛	2¾	9	11¾	¼ × ⅛
8			213C & 215C	182TC & 184TC	4½	7¼	8.5005/8.5025	3/16	9	½	17/32	1⅛	2¾	9	12 13/16	¼ × ⅛
9	15		56C, 182C & 184C	56C, 143TC & 145TC	4	5⅞	4.5005/4.5025	3/16	6⅝	⅜	13/32	1⅛	2¾	9½	12⅛	¼ × ⅛
9	15		213C & 215C	182TC & 184TC	4½	7¼	8.5005/8.5025	3/16	9	½	17/32	1⅛	2¾	9½	13	¼ × ⅛
9	15		*254UC & 256UC	*213TC & 256TC	4½	7¼	8.5005/8.5025	3/16	9	½	17/32	1⅛	2¾	9½	14	¼ × ⅛
10			182C & 184C	143TC & 145TC	3¼	5⅞	4.5005/4.5025	3/16	6⅝	⅜	13/32	1¼	2¾	10¼	13⅛	¼ × ⅛
10			213C & 215C	182TC & 184TC	4 11/16	7¼	8.5005/8.5025	3/16	9	½	17/32	1¼	2¾	10¼	13¾	¼ × ⅛
10			254UC & 256UC	213TC & 256TC	4 11/16	7¼	8.5005/8.5025	3/16	9	½	17/32	1¼	2¾	10¼	14¾	¼ × ⅛
11			182C & 184C	143TC & 145TC	3¼	5⅞	4.5005/4.5025	3/16	6⅝	⅜	13/32	1¼	2¾	10½	13 7/16	¼ × ⅛
11			213C & 215C	182TC & 184TC	4 11/16	7¼	8.5005/8.5025	3/16	9	½	17/32	1¼	2¾	10½	14 1/16	¼ × ⅛
11			254UC & 256UC	213TC & 256TC	4 11/16	7¼	8.5005/8.5025	3/16	9	½	17/32	1¼	2¾	10½	15 1/16	¼ × ⅛
12			182C & 184C	143TC & 145TC	3½	5⅞	4.5005/4.5025	3/16	6⅝	⅜	13/32	1½	3¼	12⅜	15¼	⅜ × 3/16
12			213C & 215C	182TC & 215TC	4 11/16	7¼	8.5005/8.5025	3/16	9	½	17/32	1½	3¼	12⅜	16¼	⅜ × 3/16
12			254UC & 256UC	254TC & 256TC	4 11/16	7¼	8.5005/8.5025	3/16	9	½	17/32	1½	3¼	12⅜	17	⅜ × 3/16
13			213C & 215C	182TC & 184TC	4 11/16	7¼	8.5005/8.5025	3/16	9	½	17/32	1½	3¼	13	17	⅜ × 3/16
13			254UC & 256UC	213TC & 256TC	4 11/16	7¼	8.5005/8.5025	3/16	9	½	17/32	1½	3¼	13	17¾	⅜ × 3/16
14			213C & 215C	182TC & 184TC	4 13/16	7¼	8.5005/8.5025	3/16	9	½	17/32	1¾	3¾	15	18¾	⅜ × 3/16
14			*254UC & 256UC	*213TC & 256TC	4 13/16	7¼	8.5005/8.5025	3/16	9	½	17/32	1¾	3¾	15	19¾	⅜ × 3/16
15			213C & 215C	182TC & 184TC	4 13/16	7¼	8.5005/8.5025	3/16	9	½	17/32	2	4¼	17⅜	21⅛	½ × ¼
15			*254UC & 256UC	*213TC & 256TC	4 13/16	7¼	8.5005/8.5025	3/16	9	½	17/32	2	4¼	17⅜	22⅛	½ × ¼

*Adapter ring furnished with motor adapter.

To insure proper fit, input and/or output shaft may need altering depending upon coupling used.

INDEX TO REDUCER RATINGS

SINGLE REDUCTION SPEED REDUCERS

REDUCER NO.	PAGE NO.
1	122
2	124
3	126
4	128
5	130
6	132
7	134
8	136
9	138
10	140
11	142
12	144
13	146
14	148
15	150

DOUBLE & TRIPLE REDUCTION SPEED REDUCERS

REDUCER NO.	PAGE NO.
2	152
3	154
4	156
5	158
6	164
7	170
8	176
9	182
10	188
11	194
12	200
13	206
14	212
15	218

5

SINGLE REDUCTION SERIES REDUCER NO. 1

All ratings stated are for A.G.M.A. Class 1 service.

HORSEPOWER AND TORQUE RATINGS

RATIO **		MECHANICAL★				THERMAL★				FAN COOLED — THERMAL★			
	INPUT SPEED RPM	OUTPUT TORQUE IN LBS	OUTPUT HP	INPUT HP	OUTPUT TORQUE IN LBS	OUTPUT HP	INPUT HP	GRTMR HP 1800 RPM / O/P TQUE	OUTPUT TORQUE In LBS	OUTPUT HP	INPUT HP	
1725 rpm INPUT	1800	153	0.87	1.06	144	0.82	1.00	1	153	0.87	1.06	1
5	1200	183	0.70	0.86	173	0.66	0.81		183	0.70	0.86	
	900	201	0.57	0.71	189	0.54	0.67		201	0.57	0.71	
	600	220	0.42	0.53	207	0.40	0.50	144	220	0.42	0.53	144
	300	241	0.23	0.30	227	0.22	0.29		241	0.23	0.30	
OUTPUT 345 rpm	100	256	0.08	0.12	241	0.08	0.12	*	256	0.08	0.12	
1725 rpm INPUT	1800	186	0.71	0.89	175	0.67	0.84	3/4	186	0.71	0.89	3/4
7-1/2	1200	215	0.55	0.70	202	0.51	0.66		215	0.55	0.70	
	900	231	0.44	0.57	217	0.41	0.54		231	0.44	0.57	
	600	248	0.32	0.42	233	0.30	0.39	153	248	0.32	0.42	153
	300	267	0.17	0.24	250	0.16	0.23		267	0.17	0.24	
OUTPUT 230 rpm	100	280	0.06	0.09	263	0.06	0.09		280	0.06	0.09	
1725 rpm INPUT	1800	184	0.53	0.72	172	0.49	0.68	1/2	184	0.53	0.72	3/4
10	1200	219	0.42	0.59	205	0.39	0.55		219	0.42	0.59	
	900	239	0.34	0.49	223	0.32	0.46		239	0.34	0.49	
	600	261	0.25	0.37	244	0.23	0.34	118	261	0.25	0.37	184
	300	285	0.14	0.22	266	0.13	0.20		285	0.14	0.22	
OUTPUT 172.5 rpm	100	302	0.05	0.09	282	0.05	0.09		302	0.05	0.09	*
1725 rpm INPUT	1800	213	0.41	0.59	197	0.38	0.55	1/2	213	0.41	0.59	1/2
15	1200	244	0.31	0.46	226	0.29	0.43		244	0.31	0.46	
	900	262	0.25	0.38	243	0.23	0.36		262	0.25	0.38	
	600	281	0.18	0.28	260	0.17	0.26	173	281	0.18	0.28	173
	300	301	0.10	0.17	279	0.09	0.16		301	0.10	0.17	
OUTPUT 115 rpm	100	315	0.03	0.07	292	0.03	0.07		315	0.03	0.07	
1725 rpm INPUT	1800	199	0.29	0.49	183	0.26	0.46	1/3	199	0.29	0.49	1/2
20	1200	237	0.23	0.40	217	0.21	0.37		237	0.23	0.40	
	900	259	0.19	0.34	237	0.17	0.31		259	0.19	0.34	
	600	282	0.13	0.26	258	0.12	0.24	120	282	0.13	0.26	199
	300	308	0.07	0.16	282	0.07	0.15		308	0.07	0.16	
OUTPUT 86.3 rpm	100	326	0.03	0.07	298	0.02	0.07		326	0.03	0.07	*
1725 rpm INPUT	1800	209	0.24	0.44	190	0.22	0.41	1/3	209	0.24	0.44	1/3
25	1200	245	0.19	0.36	223	0.17	0.33		245	0.19	0.36	
	900	266	0.15	0.30	242	0.14	0.28		266	0.15	0.30	
	600	288	0.11	0.23	262	0.10	0.21	143	288	0.11	0.23	143
	300	312	0.06	0.14	284	0.05	0.13		312	0.06	0.14	
OUTPUT 69 rpm	100	329	0.02	0.06	299	0.02	0.06		329	0.02	0.06	
1725 rpm INPUT	1800	219	0.21	0.40	197	0.19	0.37	1/3	219	0.21	0.40	1/3
30	1200	251	0.16	0.31	226	0.14	0.29		251	0.16	0.31	
	900	269	0.13	0.26	242	0.12	0.24		269	0.13	0.26	
	600	288	0.09	0.20	259	0.08	0.18	173	288	0.09	0.20	173
	300	309	0.05	0.12	277	0.04	0.11		309	0.05	0.12	
OUTPUT 57.5 rpm	100	323	0.02	0.05	290	0.02	0.05		323	0.02	0.05	
1725 rpm INPUT	1800	198	0.14	0.35	175	0.13	0.32	1/3	198	0.14	0.35	1/3
40	1200	215	0.10	0.26	208	0.10	0.26		215	0.10	0.26	
	900	215	0.08	0.21	215	0.08	0.21		215	0.08	0.21	
	600	215	0.05	0.15	215	0.05	0.15	175	215	0.05	0.15	190
	300	215	0.03	0.09	215	0.03	0.09		215	0.03	0.09	
OUTPUT 43.1 rpm	100	215	0.01	0.05	215	0.01	0.05	*	215	0.01	0.05	
1725 rpm INPUT	1800	152	0.09	0.28	152	0.09	0.28	1/4	152	0.09	0.28	1/4
50	1200	152	0.06	0.20	152	0.06	0.20		152	0.06	0.20	
	900	152	0.04	0.16	152	0.04	0.16		152	0.04	0.16	
	600	152	0.03	0.12	152	0.03	0.12	130	152	0.03	0.12	130
	300	152	0.01	0.08	152	0.01	0.08		152	0.01	0.08	
OUTPUT 34.5 rpm	100	152	0.01	0.04	152	0.01	0.04		152	0.01	0.04	
1725 rpm INPUT	1800	187	0.09	0.26	167	0.08	0.24	1/4	187	0.09	0.26	1/4
60	1200	187	0.06	0.19	187	0.06	0.19		187	0.06	0.19	
	900	187	0.05	0.15	187	0.05	0.15		187	0.05	0.15	
	600	187	0.03	0.11	187	0.03	0.11	167	187	0.03	0.11	172
	300	187	0.02	0.07	187	0.02	0.07		187	0.02	0.07	
OUTPUT 28.8 rpm	100	187	0.01	0.04	187	0.01	0.04	*	187	0.01	0.04	

***Numbers shown in ( ) are exact ratios*

★ Mechanical ratings indicated above apply to both non-fan cooled and fan cooled units.

**Motor H.P. exceeds reducer capacity. Output must be limited to torque shown.*

Center distance 1.333". Maximum NEMA motor frame size: 56C.

Thermal input horsepower must not be exceeded for class 1, 2, or 3 service.

REDUCER NO. 1

***SHAFT OVERHUNG AND THRUST LOADS (includes Fan Cooled and Motorized where applicable)

ALL	CB-CT	CV (VERTICAL SHAFT)				L (DROP BEARING)				S (SHAFT MOUNT)			
INPUT OHL	OUTPUT OHL	OUTPUT UP OHL	OUTPUT DOWN OHL	OUTPUT THRUST DOWN	OUTPUT THRUST UP	OUTPUT UP OHL	OUTPUT DOWN OHL	OUTPUT THRUST DOWN	OUTPUT THRUST UP	OUTPUT THRUST TO BASE	OUTPUT THRUST FROM BASE	OUTPUT OHL ‡ †	RATIO
146	198	198	172	274	274								1725 rpm INPUT
146	198	198	172	297	297								
146	198	198	172	322	322								5
146	198	198	172	368	368								
146	198	198	172	482	482								
146	198	198	172	739	624								OUTPUT 345 rpm
146	198	198	172	389	389								1725 rpm INPUT
146	198	198	172	428	428								
146	198	198	172	465	465								7-1/2
146	198	198	172	531	531								
146	198	198	172	678	624								
146	198	198	172	860	624								OUTPUT 230 rpm
146	198	198	172	389	389								1725 rpm INPUT
146	198	198	172	428	428								
146	198	198	172	465	465								10
146	198	198	172	531	531								
146	198	198	172	678	624								
146	198	198	172	860	624								OUTPUT 172.5 rpm
146	198	198	172	455	455								1725 rpm INPUT
146	198	198	172	510	510								
146	198	198	172	558	558								15
146	198	198	172	639	624								
146	198	198	172	814	624								
146	198	198	172	860	624								OUTPUT 115 rpm
146	198	198	172	527	527								1725 rpm INPUT
146	198	198	172	585	585								
146	198	198	172	636	624								20
146	198	198	172	724	624								
146	198	198	172	860	624								
146	198	198	172	860	624								OUTPUT 86.3 rpm
146	198	198	172	575	575								1725 rpm INPUT
146	198	198	172	641	624								
146	199	198	172	699	624								25
146	198	198	172	795	624								
146	198	198	172	860	624								
146	198	198	172	860	624								OUTPUT 69 rpm
146	198	198	172	618	618								1725 rpm INPUT
146	198	198	172	694	624								
146	198	198	172	758	624								30
146	198	198	172	860	624								
146	198	198	172	860	624								
146	198	198	172	860	624								OUTPUT 57.5 rpm
146	198	198	172	697	624								1725 rpm INPUT
146	198	198	172	804	624								
146	198	198	172	860	624								40
146	198	198	172	860	624								
146	198	198	172	860	624								
146	198	198	172	860	624								OUTPUT 43.1 rpm
146	198	198	172	793	624								1725 rpm INPUT
146	198	198	172	860	624								
146	198	198	172	860	624								50
146	198	198	172	860	624								
146	198	198	172	860	624								
146	198	198	172	860	624								OUTPUT 34.5 rpm
146	198	198	172	835	624								1725 rpm INPUT
146	198	198	172	860	624								
146	198	198	172	860	624								60
146	198	198	172	860	624								
146	198	198	172	860	624								
146	198	198	172	860	624								OUTPUT 28.8 rpm

****Overhung load given at one shaft diameter from housing or mounting flange.*

‡ O.H.L. based on maximum bore. Use of smaller diameter shaft may limit O.H.L.

5

SINGLE REDUCTION SERIES REDUCER NO. 2

All ratings stated are for A.G.M.A. Class 1 service.

HORSEPOWER AND TORQUE RATINGS

RATIO **		MECHANICAL★				THERMAL★				FAN COOLED – THERMAL★			
	INPUT SPEED RPM	OUTPUT TORQUE IN. LBS	OUTPUT HP	INPUT HP	OUTPUT TORQUE IN. LBS	OUTPUT HP	INPUT HP	GRTMR HP 1800 RPM / O/P TQUE	OUTPUT TORQUE In. LBS.	OUTPUT HP	INPUT HP	
1725 rpm INPUT	1800	277	1.59	1.85	251	1.44	1.68	1-1/2	277	1.59	1.85	1-1/2
5	1200	356	1.36	1.59	322	1.23	1.45		356	1.36	1.59	
	900	403	1.15	1.37	365	1.04	1.24		403	1.15	1.37	
	600	457	0.87	1.05	413	0.79	0.95	222	457	0.87	1.05	222
	300	517	0.49	0.62	467	0.45	0.57		517	0.49	0.62	
OUTPUT 345 rpm	100	562	0.18	0.24	508	0.16	0.23		562	0.18	0.24	
1725 rpm INPUT	1800	366	1.40	1.64	329	1.26	1.49	1-1/2	366	1.40	1.64	1-1/2
7-1/2	1200	440	1.12	1.33	395	1.00	1.20		440	1.12	1.33	
	900	481	0.92	1.10	433	0.82	1.00		481	0.92	1.10	
	600	527	0.67	0.82	474	0.60	0.75	329	527	0.67	0.82	332
	300	578	0.37	0.47	520	0.33	0.43		578	0.37	0.47	
OUTPUT 230 rpm	100	595	0.13	0.18	552	0.12	0.17	*	595	0.13	0.18	
1725 rpm INPUT	1800	394	1.13	1.38	353	1.01	1.25	1	394	1.13	1.38	1
10	1200	471	0.90	1.11	422	0.80	1.01		471	0.90	1.11	
	900	515	0.74	0.93	462	0.66	0.84		515	0.74	0.93	
	600	563	0.54	0.69	505	0.48	0.63	276	563	0.54	0.69	276
	300	595	0.28	0.39	552	0.26	0.37		595	0.28	0.39	
OUTPUT 172.5 rpm	100	595	0.09	0.14	585	0.09	0.15		595	0.09	0.14	
1725 rpm INPUT	1800	421	0.80	1.06	374	0.71	0.96		421	0.80	1.06	
15	1200	502	0.64	0.86	446	0.57	0.77	1	502	0.64	0.86	1
	900	548	0.52	0.72	487	0.46	0.64		548	0.52	0.72	
	600	595	0.38	0.54	532	0.34	0.49		595	0.38	0.54	
	300	595	0.19	0.29	580	0.18	0.29	374	595	0.19	0.29	394
OUTPUT 115 rpm	100	595	0.06	0.11	595	0.06	0.12	*	595	0.06	0.11	
1725 rpm INPUT	1800	430	0.62	0.82	380	0.54	0.79		430	0.62	0.82	
20	1200	512	0.49	0.67	453	0.43	0.64	3/4	512	0.49	0.67	3/4
	900	559	0.40	0.56	494	0.35	0.53		559	0.40	0.56	
	600	573	0.27	0.40	539	0.26	0.40		573	0.27	0.40	
	300	573	0.14	0.22	573	0.14	0.24	360	573	0.14	0.22	360
OUTPUT 86.3 rpm	100	573	0.05	0.08	573	0.05	0.10		573	0.05	0.08	
1725 rpm INPUT	1800	434	0.50	0.76	378	0.43	0.67		434	0.50	0.76	
25	1200	516	0.39	0.62	449	0.34	0.55	1/2	516	0.39	0.62	3/4
	900	563	0.32	0.52	490	0.28	0.46		563	0.32	0.52	
	600	614	0.23	0.39	534	0.20	0.35		614	0.23	0.39	
	300	621	0.12	0.22	583	0.11	0.21	261	621	0.12	0.22	429
OUTPUT 69 rpm	100	621	0.04	0.09	618	0.04	0.10		621	0.04	0.09	
1725 rpm INPUT	1800	434	0.41	0.67	375	0.36	0.60		434	0.41	0.67	
30	1200	516	0.33	0.55	446	0.28	0.49	1/2	516	0.33	0.55	1/2
	900	563	0.27	0.46	486	0.23	0.41		563	0.27	0.46	
	600	595	0.19	0.35	530	0.17	0.31		595	0.19	0.35	
	300	595	0.09	0.19	578	0.09	0.19	300	595	0.09	0.19	300
OUTPUT 57.5 rpm	100	595	0.03	0.08	595	0.03	0.09		595	0.03	0.08	
1725 rpm INPUT	1800	429	0.31	0.51	363	0.26	0.49		429	0.31	0.51	
40	1200	510	0.24	0.42	431	0.21	0.41	1/2	510	0.24	0.42	1/2
	900	573	0.20	0.40	470	0.17	0.34		573	0.20	0.40	
	600	573	0.14	0.29	513	0.12	0.26		573	0.14	0.29	
	300	573	0.07	0.17	559	0.07	0.17	363	573	0.07	0.17	368
OUTPUT 43.1 rpm	100	573	0.02	0.08	573	0.02	0.08	*	573	0.02	0.08	
1725 rpm INPUT	1800	398	0.23	0.47	348	0.20	0.42		398	0.23	0.47	
50	1200	398	0.15	0.34	398	0.15	0.34	1/3	398	0.15	0.34	1/2
	900	398	0.11	0.27	398	0.11	0.27		398	0.11	0.27	
	600	398	0.08	0.19	398	0.08	0.19		398	0.08	0.19	
	300	398	0.04	0.12	398	0.04	0.12	249	398	0.04	0.12	398
OUTPUT 34.5 rpm	100	398	0.01	0.06	398	0.01	0.06		398	0.01	0.06	*
1725 rpm INPUT	1800	400	0.19	0.44	318	0.15	0.37		400	0.19	0.44	
60	1200	400	0.13	0.32	379	0.12	0.31	1/3	400	0.13	0.32	1/2
	900	400	0.10	0.25	400	0.10	0.25		400	0.10	0.25	
	600	400	0.06	0.19	400	0.06	0.19		400	0.06	0.19	
	300	400	0.03	0.11	400	0.03	0.11	271	400	0.03	0.11	400
OUTPUT 28.8 rpm	100	400	0.01	0.06	400	0.01	0.06		400	0.01	0.06	*

** *Numbers shown in ( ) are exact ratios*

★ *Mechanical ratings indicated above apply to both non-fan cooled and fan cooled units.*

* *Motor H.P. exceeds reducer capacity. Output must be limited to torque shown.*

Center distance 1.750". Maximum NEMA motor frame size: 184C — 145TC flange.

Thermal input horsepower must not be exceeded for class 1, 2, or 3 service.

REDUCER NO. 2

***SHAFT OVERHUNG AND THRUST LOADS (includes Fan Cooled and Motorized where applicable)

ALL	CB-CT	CV (VERTICAL SHAFT)				L (DROP BEARING)				S (SHAFT MOUNT)			RATIO
INPUT OHL	OUTPUT OHL	OUTPUT UP OHL	OUTPUT DOWN OHL	OUTPUT THRUST DOWN	OUTPUT THRUST UP	OUTPUT UP OHL	OUTPUT DOWN OHL	OUTPUT THRUST DOWN	OUTPUT THRUST UP	OUTPUT THRUST TO BASE	OUTPUT THRUST FROM BASE	OUTPUT OHL ‡ †	
171	286	286	268	523	522								1725 rpm INPUT
171	286	286	268	564	563								5
171	286	286	268	606	605								
171	286	286	268	680	678								
171	286	286	268	854	832								
171	286	286	268	883	832								OUTPUT 345 rpm
171	286	286	268	582	581								1725 rpm INPUT
171	286	286	268	642	641								7-1/2
171	286	286	268	697	695								
171	286	286	268	794	792								
171	286	286	268	883	832								
171	286	286	268	883	832								OUTPUT 230 rpm
171	286	286	268	668	667								1725 rpm INPUT
171	286	286	268	741	740								10
171	286	286	268	806	804								
171	286	286	268	883	832								
171	286	286	268	883	832								
171	286	286	268	883	832								OUTPUT 172.5 rpm
171	286	286	268	797	796								1725 rpm INPUT
171	286	286	268	883	832								15
171	286	286	268	883	832								
171	286	286	268	883	832								
171	286	286	268	883	832								
171	286	286	268	883	832								OUTPUT 115 rpm
171	286	286	268	883	832								1725 rpm INPUT
171	286	286	268	883	832								20
171	286	286	268	883	832								
171	286	286	268	883	832								
171	286	286	268	883	832								
171	286	286	268	883	832								OUTPUT 86.3 rpm
171	286	286	268	883	832								1725 rpm INPUT
171	286	286	268	883	832								25
171	286	286	268	883	832								
171	286	286	268	883	832								
171	286	286	268	883	832								
171	286	286	268	883	832								OUTPUT 69 rpm
171	286	286	268	883	832								1725 rpm INPUT
171	286	286	268	883	832								30
171	286	286	268	883	832								
171	286	286	268	883	832								
171	286	286	268	883	832								
171	286	286	268	883	832								OUTPUT 57.5 rpm
171	286	286	268	883	832								1725 rpm INPUT
171	286	286	268	883	832								40
171	286	286	268	883	832								
171	286	286	268	883	832								
171	286	286	268	883	832								
171	286	286	268	883	832								OUTPUT 43.1 rpm
171	286	286	268	883	832								1725 rpm INPUT
171	286	286	268	883	832								50
171	286	286	268	883	832								
171	286	286	268	883	832								
171	286	286	268	883	832								
171	286	286	268	883	832								OUTPUT 34.5 rpm
171	286	286	268	883	832								1725 rpm INPUT
171	286	286	268	883	832								60
171	286	286	268	883	832								
171	286	286	268	883	832								
171	286	286	268	883	832								
171	286	286	268	883	832								OUTPUT 28.8 rpm

***Overhung load given at one shaft diameter from housing or mounting flange.

‡ O.H.L. based on maximum bore. Use of smaller diameter shaft may limit O.H.L.

5

SINGLE REDUCTION SERIES REDUCER NO. 3

All ratings stated are for A.G.M.A. Class 1 service.

HORSEPOWER AND TORQUE RATINGS

RATIO **		MECHANICAL★				THERMAL★				FAN COOLED – THERMAL★			
	INPUT SPEED RPM	OUTPUT TORQUE IN. LBS.	OUTPUT HP	INPUT HP	OUTPUT TORQUE IN. LBS.	OUTPUT HP	INPUT HP	GRTMR HP 1800 RPM / O/P TQUE	OUTPUT TORQUE In. LBS.	OUTPUT HP	INPUT HP	
1725 rpm INPUT	1800	409	2.34	2.66	358	2.05	2.34	2	409	2.34	2.66	3
	1200	512	1.95	2.24	448	1.71	1.97		512	1.95	2.24	
5	900	587	1.68	1.94	514	1.47	1.71		587	1.68	1.94	
	600	673	1.28	1.51	589	1.12	1.33		673	1.28	1.51	409
(4-2/3) 3 S Only	300	772	0.74	0.90	676	0.64	0.80	302	772	0.74	0.90	
OUTPUT 345 rpm	100	846	0.27	0.36	740	0.24	0.32		846	0.27	0.36	*
1725 rpm INPUT	1800	519	1.98	2.21	453	1.72	2.00	2	519	1.98	2.21	2
	1200	626	1.59	1.80	546	1.39	1.57		626	1.59	1.80	
7-1/2	900	687	1.31	1.50	599	1.14	1.31		687	1.31	1.50	
	600	754	0.96	1.11	658	0.84	0.97	453	754	0.96	1.11	
	300	827	0.53	0.63	722	0.46	0.55		827	0.53	0.63	454
OUTPUT 230 rpm	100	880	0.19	0.24	768	0.16	0.21	*	880	0.19	0.24	
1725 rpm INPUT	1800	562	1.61	1.90	486	1.39	1.66	1-1/2	562	1.61	1.90	2
	1200	673	1.28	1.54	582	1.11	1.34		673	1.28	1.54	
10	900	736	1.05	1.28	637	0.91	1.12		736	1.05	1.28	
	600	806	0.77	0.96	697	0.66	0.84		806	0.77	0.96	
	300	857	0.41	0.54	763	0.36	0.49	434	857	0.41	0.54	562
OUTPUT 172.5 rpm	100	857	0.14	0.21	810	0.13	0.20		857	0.14	0.21	*
1725 rpm INPUT	1800	590	1.12	1.44	507	0.97	1.26	1	590	1.12	1.44	1-1/2
	1200	718	0.91	1.19	618	0.78	1.04		718	0.91	1.19	
15	900	793	0.76	1.00	682	0.65	0.88		793	0.76	1.00	
	600	857	0.54	0.75	752	0.48	0.67		857	0.54	0.75	
	300	857	0.27	0.41	830	0.26	0.40		857	0.27	0.41	590
OUTPUT 115 rpm	100	857	0.09	0.16	857	0.09	0.16	392	857	0.09	0.16	*
1725 rpm INPUT	1800	603	0.86	1.18	512	0.73	1.02	1	603	0.86	1.18	1-1/2
	1200	733	0.70	0.98	623	0.59	0.85		733	0.70	0.98	
20	900	800	0.57	0.82	688	0.49	0.72		800	0.57	0.82	
	600	800	0.38	0.58	758	0.36	0.55		800	0.38	0.58	
	300	800	0.19	0.32	800	0.19	0.32		800	0.19	0.32	603
OUTPUT 86.3 rpm	100	800	0.06	0.13	800	0.06	0.13	499	800	0.06	0.13	*
1725 rpm INPUT	1800	624	0.73	1.02	527	0.61	0.88	3/4	624	0.73	1.02	1
	1200	735	0.57	0.82	620	0.48	0.71		735	0.57	0.82	
25	900	740	0.43	0.64	673	0.39	0.59		740	0.43	0.64	
(24-1/2)	600	740	0.29	0.46	730	0.28	0.45		740	0.29	0.46	
	300	740	0.14	0.26	740	0.14	0.26		740	0.14	0.26	
OUTPUT 69 rpm	100	740	0.05	0.11	740	0.05	0.11	435	740	0.05	0.11	609
1725 rpm INPUT	1800	622	0.59	0.90	520	0.50	0.77	3/4	622	0.59	0.90	1
	1200	740	0.47	0.73	618	0.39	0.63		740	0.47	0.73	
30	900	809	0.38	0.62	674	0.32	0.53		809	0.38	0.62	
	600	857	0.27	0.46	735	0.23	0.41		857	0.27	0.46	
	300	857	0.14	0.26	802	0.13	0.25		857	0.14	0.26	622
OUTPUT 57.5 rpm	100	857	0.05	0.11	850	0.05	0.11	504	857	0.05	0.11	*
1725 rpm INPUT	1800	601	0.43	0.75	492	0.35	0.63	1/2	601	0.43	0.75	3/4
	1200	731	0.35	0.63	597	0.28	0.53		731	0.35	0.63	
40	900	800	0.29	0.53	658	0.24	0.45		800	0.29	0.53	
	600	800	0.19	0.39	726	0.17	0.36		800	0.19	0.39	
	300	800	0.10	0.23	800	0.10	0.23		800	0.10	0.23	601
OUTPUT 43.1 rpm	100	800	0.03	0.10	800	0.03	0.10	362	800	0.03	0.10	*
1725 rpm INPUT	1800	596	0.34	0.62	477	0.27	0.52	1/2	596	0.34	0.62	3/4
	1200	693	0.26	0.50	556	0.21	0.42		693	0.26	0.50	
50	900	740	0.21	0.41	599	0.17	0.35		740	0.21	0.41	
	600	740	0.14	0.30	647	0.12	0.27		740	0.14	0.30	
	300	740	0.07	0.18	697	0.07	0.17		740	0.07	0.18	596
OUTPUT 34.5 rpm	100	740	0.02	0.08	734	0.02	0.08	456	740	0.02	0.08	*
1725 rpm INPUT	1800	566	0.27	0.55	444	0.21	0.46	1/2	566	0.27	0.55	1/2
	1200	650	0.21	0.44	522	0.17	0.37		650	0.21	0.44	
60	900	650	0.16	0.35	567	0.14	0.32		650	0.16	0.35	
	600	650	0.10	0.26	614	0.10	0.25		650	0.10	0.26	
	300	650	0.05	0.16	650	0.05	0.16	444	650	0.05	0.16	
OUTPUT 28.8 rpm	100	650	0.02	0.07	650	0.02	0.07	*	650	0.02	0.07	504

**Numbers shown in ( ) are exact ratios

★ *Mechanical ratings indicated above apply to both non-fan cooled and fan cooled units.*

Motor H.P. exceeds reducer capacity. Output must be limited to torque shown.

Center distance 2.000". Maximum NEMA motor frame size: 184C — 145TC flange.
Thermal input horsepower must not be exceeded for class 1, 2, or 3 service.

REDUCER NO. 3

***SHAFT OVERHUNG AND THRUST LOADS (includes Fan Cooled and Motorized where applicable)

ALL	CB-CT	CV (VERTICAL SHAFT)				L (DROP BEARING)				S (SHAFT MOUNT)			RATIO
INPUT OHL	OUTPUT OHL	OUTPUT UP OHL	OUTPUT DOWN OHL	OUTPUT THRUST DOWN	OUTPUT THRUST UP	OUTPUT UP OHL	OUTPUT DOWN OHL	OUTPUT THRUST DOWN	OUTPUT THRUST UP	OUTPUT THRUST TO BASE	OUTPUT THRUST FROM BASE	OUTPUT OHL ‡ †	
171	428	428	402	492	489					1565	1248	1224	1725 rpm INPUT
171	428	428	402	524	519					1736	1248	1224	
171	428	428	402	552	546					1873	1248	1224	5
171	428	428	402	614	608					2106	1248	1224	
171	428	428	402	778	771					2115	1248	1224	(4-2/3) 3 S Only
171	428	428	402	1117	1117					2115	1248	1224	OUTPUT 345 rpm
171	428	428	402	536	531					1714	1248	1224	1725 rpm INPUT
171	428	428	402	580	575					1909	1248	1224	
171	428	428	402	627	621					2075	1248	1224	7-1/2
171	428	428	402	715	707					2115	1248	1224	
171	428	428	402	924	916					2115	1248	1224	
171	428	428	402	1117	1117					2115	1248	1224	OUTPUT 230 rpm
171	428	428	402	634	629					1925	1248	1224	1725 rpm INPUT
171	428	428	402	695	690					2115	1248	1224	
171	428	428	402	754	748					2115	1248	1224	10
171	428	428	402	859	852					2115	1248	1224	
171	428	428	402	1112	1105					2115	1248	1224	
171	428	428	402	1117	1117					2115	1248	1224	OUTPUT 172.5 rpm
171	428	428	402	785	780					2115	1248	1224	1725 rpm INPUT
171	428	428	402	864	858					2115	1248	1224	
171	428	428	402	934	928					2115	1248	1224	15
171	428	428	402	1065	1058					2115	1248	1224	
171	428	428	402	1117	1117					2115	1248	1224	
171	428	428	402	1117	1117					2115	1248	1224	OUTPUT 115 rpm
171	428	428	402	894	889					2115	1248	1224	1725 rpm INPUT
171	428	428	402	987	982					2115	1248	1224	
171	428	428	402	1074	1068					2115	1248	1224	20
171	428	428	402	1117	1117					2115	1248	1224	
171	428	428	402	1117	1117					2115	1248	1224	
171	428	428	402	1117	1117					2115	1248	1224	OUTPUT 86.3 rpm
171	428	428	402	965	961					2115	1248	1224	1725 rpm INPUT
171	428	428	402	1076	1071					2115	1248	1224	
171	428	428	402	1117	1117					2115	1248	1224	25
171	428	428	402	1117	1117					2115	1248	1224	(24-1/2)
171	428	428	402	1117	1117					2115	1248	1224	
171	428	428	402	1117	1117					2115	1248	1224	OUTPUT 69 rpm
171	428	428	402	1117	1117					2115	1248	1224	1725 rpm INPUT
171	428	428	402	1117	1117					2115	1248	1224	
171	428	428	402	1117	1117					2115	1248	1224	30
171	428	428	402	1117	1117					2115	1248	1224	
171	428	428	402	1117	1117					2115	1248	1224	
171	428	428	402	1117	1117					2115	1248	1224	OUTPUT 57.5 rpm
171	428	428	402	1117	1117					2115	1248	1224	1725 rpm INPUT
171	428	428	402	1117	1117					2115	1248	1224	
171	428	428	402	1117	1117					2115	1248	1224	40
171	428	428	402	1117	1117					2115	1248	1224	
171	428	428	402	1117	1117					2115	1248	1224	
171	428	428	402	1117	1117					2115	1248	1224	OUTPUT 43.1 rpm
171	428	428	402	1117	1117					2115	1248	1224	1725 rpm INPUT
171	428	428	402	1117	1117					2115	1248	1224	
171	428	428	402	1117	1117					2115	1248	1224	50
171	428	428	402	1117	1117					2115	1248	1224	
171	428	428	402	1117	1117					2115	1248	1224	
171	428	428	402	1117	1117					2115	1248	1224	OUTPUT 34.5 rpm
171	428	428	402	1117	1117					2115	1248	1224	1725 rpm INPUT
171	428	428	402	1117	1117					2115	1248	1224	
171	428	428	402	1117	1117					2115	1248	1224	60
171	428	428	402	1117	1117					2115	1248	1224	
171	428	428	402	1117	1117					2115	1248	1224	
171	428	428	402	1117	1117					2115	1248	1224	OUTPUT 28.8 rpm

***Overhung load given at one shaft diameter from housing or mounting flange.

‡ O.H.L. based on maximum bore. Use of smaller diameter shaft may limit O.H.L.

† 4.625" from centerline.

5

SINGLE REDUCTION SERIES REDUCER NO. 4

All ratings stated are for A.G.M.A. Class 1 service.

HORSEPOWER AND TORQUE RATINGS

RATIO **		MECHANICAL★				THERMAL★				FAN COOLED — THERMAL★			
	INPUT SPEED RPM	OUTPUT TORQUE IN LBS	OUTPUT HP	INPUT HP	OUTPUT TORQUE IN LBS	OUTPUT HP	INPUT HP	GRTMR HP 1800 RPM / O/P TQUE	OUTPUT TORQUE In LBS	OUTPUT HP	INPUT HP	
1725 rpm INPUT	1800	894	5.11	5.62	703	4.02	4.45	5	804	4.59	5.06	5
	1200	1117	4.25	4.72	878	3.34	3.74		1004	3.82	4.25	
5	900	1307	3.73	4.17	1028	2.94	3.30		1147	3.35	3.76	
	600	1494	2.84	3.23	1202	2.29	2.61	703	1374	2.62	2.98	
	300	1494	1.42	1.67	1406	1.34	1.58		1494	1.42	1.67	793
OUTPUT 345 rpm	100	1494	0.47	0.60	1494	0.47	0.60	*	1494	0.47	0.60	
1725 rpm INPUT	1800	1048	3.99	4.47	819	3.12	3.53	3	942	3.59	4.03	5
	1200	1311	3.33	3.77	1025	2.60	2.97		1179	2.99	3.40	
7-1/2	900	1503	2.86	3.27	1176	2.24	2.58		1351	2.57	2.95	
	600	1723	2.19	2.55	1348	1.71	2.01		1549	1.97	2.30	942
	300	1785	1.13	1.37	1545	0.98	1.20	691	1776	1.13	1.37	
OUTPUT 230 rpm	100	1785	0.38	0.50	1692	0.36	0.48		1785	0.38	0.50	*
1725 rpm INPUT	1800	1141	3.26	3.71	890	2.54	2.92	3	1026	2.93	3.35	3
	1200	1432	2.73	3.14	1116	2.13	2.47		1287	2.45	2.83	
10	900	1475	2.11	2.46	1250	1.79	2.10		1441	2.06	2.41	
	600	1475	1.40	1.68	1400	1.33	1.60	890	1475	1.40	1.68	
	300	1475	0.70	0.89	1475	0.70	0.89		1475	0.70	0.89	
OUTPUT 172.5 rpm	100	1475	0.23	0.33	1475	0.23	0.33	*	1475	0.23	0.33	914
1725 rpm INPUT	1800	1206	2.30	2.81	932	1.78	2.20	2	1084	2.06	2.54	3
	1200	1507	1.91	2.38	1165	1.48	1.87		1355	1.72	2.15	
15	900	1719	1.64	2.07	1329	1.27	1.62		1545	1.47	1.87	
	600	1785	1.13	1.48	1516	0.96	1.27		1762	1.12	1.47	
	300	1785	0.57	0.80	1728	0.55	0.77		1785	0.57	0.80	1084
OUTPUT 115 rpm	100	1785	0.19	0.31	1785	0.19	0.31	840	1785	0.19	0.31	*
1725 rpm INPUT	1800	1261	1.80	2.26	964	1.38	1.76	1-1/2	1134	1.62	2.05	2
	1200	1475	1.40	1.81	1199	1.14	1.49		1411	1.34	1.73	
20	900	1475	1.05	1.39	1338	0.96	1.27		1475	1.05	1.39	
	600	1475	0.70	0.97	1475	0.70	0.97		1475	0.70	0.97	
	300	1475	0.35	0.53	1475	0.35	0.53		1475	0.35	0.53	
OUTPUT 86.3 rpm	100	1475	0.12	0.21	1475	0.12	0.21	806	1475	0.12	0.21	1134
1725 rpm INPUT	1800	1290	1.47	1.88	977	1.12	1.46	1-1/2	1160	1.33	1.71	1-1/2
	1200	1380	1.05	1.39	1164	0.89	1.19		1380	1.05	1.39	
25	900	1380	0.79	1.07	1271	0.73	0.99		1380	0.79	1.07	
	600	1380	0.53	0.75	1380	0.53	0.75		1380	0.53	0.75	
	300	1380	0.26	0.41	1380	0.26	0.41	977	1380	0.26	0.41	
OUTPUT 69 rpm	100	1380	0.09	0.17	1380	0.09	0.17	*	1380	0.09	0.17	1005
1725 rpm INPUT	1800	1243	1.18	1.70	933	0.89	1.31	1-1/2	1118	1.06	1.54	1-1/2
	1200	1553	0.99	1.46	1166	0.74	1.12		1396	0.89	1.32	
30	900	1769	0.84	1.28	1328	0.63	0.99		1590	0.76	1.16	
	600	1785	0.57	0.91	1512	0.48	0.79		1785	0.57	0.91	
	300	1785	0.28	0.51	1722	0.27	0.49	933	1785	0.28	0.51	
OUTPUT 57.5 rpm	100	1785	0.09	0.21	1785	0.09	0.21	*	1785	0.09	0.21	1085
1725 rpm INPUT	1800	1261	0.90	1.36	927	0.66	1.04	1	1134	0.81	1.23	1-1/2
	1200	1475	0.70	1.10	1151	0.55	0.88		1408	0.67	1.06	
40	900	1475	0.53	0.86	1283	0.46	0.76		1475	0.53	0.86	
	600	1475	0.35	0.62	1430	0.34	0.60		1475	0.35	0.62	
	300	1475	0.18	0.35	1475	0.18	0.35		1475	0.18	0.35	1134
OUTPUT 43.1 rpm	100	1475	0.06	0.15	1475	0.06	0.15	889	1475	0.06	0.15	*
1725 rpm INPUT	1800	1234	0.71	1.10	888	0.51	0.83	3/4	1109	0.63	1.00	1
	1200	1380	0.53	0.86	1056	0.40	0.68		1320	0.50	0.83	
50	900	1380	0.39	0.67	1151	0.33	0.58		1380	0.39	0.67	
	600	1380	0.26	0.48	1255	0.24	0.45		1380	0.26	0.48	
	300	1380	0.13	0.28	1369	0.13	0.28		1380	0.13	0.28	
OUTPUT 34.5 rpm	100	1380	0.04	0.12	1380	0.04	0.12	782	1380	0.04	0.12	1106
1725 rpm INPUT	1800	1137	0.54	0.91	826	0.39	0.70	3/4	1052	0.50	0.85	1
	1200	1137	0.36	0.65	978	0.31	0.58		1137	0.36	0.65	
60	900	1137	0.27	0.52	1065	0.25	0.49		1137	0.27	0.52	
	600	1137	0.18	0.37	1137	0.18	0.37		1137	0.18	0.37	
	300	1137	0.09	0.22	1137	0.09	0.22	826	1137	0.09	0.22	1052
OUTPUT 28.8 rpm	100	1137	0.03	0.10	1137	0.03	0.10	*	1137	0.03	0.10	*

***Numbers shown in ( ) are exact ratios*

★ *Mechanical ratings indicated above apply to both non-fan cooled and fan cooled units.*

**Motor H.P. exceeds reducer capacity. Output must be limited to torque shown.*

Center distance 2.625". Maximum NEMA motor frame size: 184C — 145TC flange.

Thermal input horsepower must not be exceeded for class 1, 2, or 3 service.

REDUCER NO. 4

***SHAFT OVERHUNG AND THRUST LOADS (includes Fan Cooled and Motorized where applicable)

ALL	CB-CT	CV (VERTICAL SHAFT)				L (DROP BEARING)				S (SHAFT MOUNT)			RATIO
INPUT OHL	OUTPUT OHL	OUTPUT UP OHL	OUTPUT DOWN OHL	OUTPUT THRUST DOWN	OUTPUT THRUST UP	OUTPUT UP OHL	OUTPUT DOWN OHL	OUTPUT THRUST DOWN	OUTPUT THRUST UP	OUTPUT THRUST TO BASE	OUTPUT THRUST FROM BASE	OUTPUT OHL ‡†	
349	835	835	749	712	707	835	775	726	712	1626	1626	1340	1725 rpm INPUT
349	835	835	749	750	744	835	775	768	750	1780	1740	1340	
349	835	835	749	772	764	835	775	793	772	1893	1740	1340	5
349	835	835	749	858	849	835	775	882	859	2123	1740	1340	
349	835	835	749	1204	1195	835	775	1230	1206	2266	1740	1340	
349	835	835	749	1922	1912	835	775	1562	1632	2266	1740	1340	OUTPUT 345 rpm
349	835	835	749	879	875	835	775	893	879	1915	1740	1340	1725 rpm INPUT
349	835	835	749	942	936	835	775	959	942	2110	1740	1340	
349	835	835	749	995	989	835	775	1015	995	2266	1740	1340	7-1/2
349	835	835	749	1110	1102	835	775	1132	1110	2266	1740	1340	
349	835	835	749	1475	1467	835	775	1500	1476	2266	1740	1340	
349	835	835	749	2285	1632	835	775	1562	1632	2266	1740	1340	OUTPUT 230 rpm
349	835	835	749	991	987	835	775	1006	992	2121	1740	1340	1725 rpm INPUT
349	835	835	749	1067	1061	835	775	1085	1067	2266	1740	1340	
349	835	835	749	1189	1183	835	775	1208	1190	2266	1740	1340	10
349	835	835	749	1403	1397	835	775	1422	1404	2266	1740	1340	
349	835	835	749	1829	1632	835	775	1562	1632	2266	1740	1340	
349	835	835	749	2356	1632	835	775	1562	1632	2266	1740	1340	OUTPUT 172.5 rpm
349	835	835	749	1235	1231	835	775	1244	1228	2266	1740	1340	1725 rpm INPUT
349	835	835	749	1351	1345	835	775	1361	1342	2266	1740	1340	
349	835	835	749	1449	1442	835	775	1461	1439	2266	1740	1340	15
349	835	835	749	1671	1632	835	775	1562	1632	2266	1740	1340	
349	835	835	749	2159	1632	835	775	1562	1632	2266	1740	1340	
349	835	835	749	2356	1632	835	775	1562	1632	2266	1740	1340	OUTPUT 115 rpm
349	835	835	749	1385	1380	835	775	1393	1378	2266	1740	1340	1725 rpm INPUT
349	835	835	749	1547	1541	835	775	1557	1539	2266	1740	1340	
349	835	835	749	1716	1632	835	775	1562	1632	2266	1740	1340	20
349	835	835	749	1982	1632	835	775	1562	1632	2266	1740	1340	
349	835	835	749	2356	1632	835	775	1562	1632	2266	1740	1340	
349	835	835	749	2356	1632	835	775	1562	1632	2266	1740	1340	OUTPUT 86.3 rpm
349	835	835	749	1499	1494	835	775	1508	1494	2266	1740	1340	1725 rpm INPUT
349	835	835	749	1709	1632	835	775	1562	1632	2266	1740	1340	
349	835	835	749	1890	1632	835	775	1562	1632	2266	1740	1340	25
349	835	835	749	2172	1632	835	775	1562	1632	2266	1740	1340	
349	835	835	749	2356	1632	835	775	1562	1632	2266	1740	1340	
349	835	835	749	2356	1632	835	775	1562	1632	2266	1740	1340	OUTPUT 69 rpm
349	835	835	749	1647	1632	835	775	1562	1632	2266	1740	1340	1725 rpm INPUT
349	835	835	749	1823	1632	835	775	1562	1632	2266	1740	1340	
349	835	835	749	1966	1632	835	775	1562	1632	2266	1740	1340	30
349	835	835	749	2261	1632	835	775	1562	1632	2266	1740	1340	
349	835	835	749	2356	1632	835	775	1562	1632	2266	1740	1340	
349	835	835	749	2356	1632	835	775	1562	1632	2266	1740	1340	OUTPUT 57.5 rpm
349	835	835	749	1833	1632	835	775	1562	1632	2266	1740	1340	1725 rpm INPUT
349	835	835	749	2056	1632	835	775	1562	1632	2266	1740	1340	
349	835	835	749	2265	1632	835	775	1562	1632	2266	1740	1340	40
349	835	835	749	2356	1632	835	775	1562	1632	2266	1740	1340	
349	835	835	749	2356	1632	835	775	1562	1632	2266	1740	1340	
349	835	835	749	2356	1632	835	775	1562	1632	2266	1740	1340	OUTPUT 43.1 rpm
349	835	835	749	1989	1632	835	775	1562	1632	2266	1740	1340	1725 rpm INPUT
349	835	835	749	2245	1632	835	775	1562	1632	2266	1740	1340	
349	835	835	749	2356	1632	835	775	1562	1632	2266	1740	1340	50
349	835	835	749	2356	1632	835	775	1562	1632	2266	1740	1340	
349	835	835	749	2356	1632	835	775	1562	1632	2266	1740	1340	
349	835	835	749	2356	1632	835	775	1562	1632	2266	1740	1340	OUTPUT 34.5 rpm
349	835	835	749	2146	1632	835	775	1562	1632	2266	1740	1340	1725 rpm INPUT
349	835	835	749	2356	1632	835	775	1562	1632	2266	1740	1340	
349	835	835	749	2356	1632	835	775	1562	1632	2266	1740	1340	60
349	835	835	749	2356	1632	835	775	1562	1632	2266	1740	1340	
349	835	835	749	2356	1632	835	775	1562	1632	2266	1740	1340	
349	835	835	749	2356	1632	835	775	1562	1632	2266	1740	1340	OUTPUT 28.8 rpm

***Overhung load given at one shaft diameter from housing or mounting flange.

‡ O.H.L. based on maximum bore. Use of smaller diameter shaft may limit O.H.L.

† 5.3125 from centerline

5

SINGLE REDUCTION SERIES REDUCER NO. 5

All ratings stated are for A.G.M.A. Class 1 service.

HORSEPOWER AND TORQUE RATINGS

RATIO **		MECHANICAL★				THERMAL★				FAN COOLED – THERMAL★			
	INPUT SPEED RPM	OUTPUT TORQUE IN. LBS	OUTPUT HP	INPUT HP	OUTPUT TORQUE IN. LBS	OUTPUT HP	INPUT HP	GRTMR HP 1800 RPM / O/P TQUE	OUTPUT TORQUE In. LBS	OUTPUT HP	INPUT HP	
1725 rpm INPUT	1800	1399	7.69	8.36	979	5.38	5.91	5	1119	6.15	6.72	7-1/2
5	1200	1739	6.37	6.99	1217	4.46	4.94		1391	5.09	5.62	
(5-1/5)	900	2055	5.64	6.24	1439	3.95	4.41		1644	4.52	5.02	
	600	2429	4.45	4.98	1700	3.11	3.52		1943	3.56	4.01	1119
	300	2870	2.63	3.03	2009	1.84	2.14	824	2296	2.10	2.44	
OUTPUT 345 rpm	100	3208	0.98	1.20	2246	0.68	0.85		2567	0.78	0.97	*
1725 rpm INPUT	1800	1609	6.38	7.02	1123	4.46	4.95	5	1287	5.11	5.65	5
7-1/2	1200	2015	5.33	5.92	1406	3.72	4.17		1612	4.26	4.76	
(7-1/5)	900	2318	4.60	5.15	1618	3.21	3.63		1855	3.68	4.14	
	600	2545	3.37	3.83	1862	2.46	2.83	1123	2134	2.82	3.23	1287
	300	2545	1.68	1.99	2143	1.42	1.69		2456	1.62	1.92	
OUTPUT 230 rpm	100	2545	0.56	0.72	2353	0.52	0.66	*	2545	0.56	0.72	*
1725 rpm INPUT	1800	1737	4.80	5.39	1202	3.32	3.78	3	1389	3.84	4.34	5
10	1200	2192	4.04	4.58	1517	2.80	3.21		1754	3.23	3.70	
(10-1/3)	900	2463	3.40	3.90	1704	2.36	2.74		1970	2.72	3.15	
	600	2767	2.55	2.98	1915	1.76	2.09		2214	2.04	2.40	1389
	300	3109	1.43	1.74	2152	0.99	1.23	941	2487	1.15	1.41	
OUTPUT 167 rpm	100	3132	0.48	0.64	2325	0.36	0.48		2688	0.41	0.55	*
1725 rpm INPUT	1800	1877	3.46	4.06	1282	2.36	2.83	3	1501	2.77	3.28	3
15	1200	2351	2.89	3.44	1606	1.97	2.39		1881	2.31	2.78	
(15-1/2)	900	2632	2.42	2.93	1797	1.66	2.04		2105	1.94	2.37	
	600	2945	1.81	2.24	2012	1.24	1.56	1282	2356	1.45	1.81	
	300	3132	0.96	1.26	2252	0.69	0.93		2637	0.81	1.07	1365
OUTPUT 115 rpm	100	3132	0.32	0.47	2727	0.25	0.37	*	2843	0.29	0.43	
1725 rpm INPUT	1800	1932	2.76	3.33	1314	1.88	2.32	2	1546	2.21	2.70	3
20	1200	2376	2.26	2.78	1616	1.54	1.94		1901	1.81	2.25	
	900	2635	1.88	2.36	1792	1.28	1.64		2108	1.51	1.91	
	600	2715	1.29	1.67	1987	0.95	1.25		2328	1.11	1.46	
	300	2715	0.65	0.90	2203	0.52	0.74	1116	2592	0.62	0.86	1546
OUTPUT 86.3 rpm	100	2715	0.21	0.34	2360	0.19	0.30		2715	0.22	0.34	*
1725 rpm INPUT	1800	1912	2.19	2.81	1289	1.47	1.95	2	1530	1.75	2.28	2
25	1200	2430	1.85	2.43	1638	1.25	1.69		1944	1.48	1.98	
	900	2740	1.57	2.10	1847	1.06	1.46		2192	1.25	1.71	
	600	3089	1.18	1.64	2082	0.79	1.14	1289	2471	0.94	1.33	
	300	3482	0.66	1.00	2347	0.45	0.70		2786	0.53	0.81	1324
OUTPUT 69 rpm	100	3484	0.22	0.39	2542	0.16	0.30	*	3017	0.19	0.34	
1725 rpm INPUT	1800	1942	1.85	2.45	1297	1.23	1.69	1-1/2	1554	1.48	2.00	2
30	1200	2428	1.54	2.09	1622	1.03	1.45		1942	1.23	1.70	
	900	2714	1.29	1.80	1813	0.86	1.24		2171	1.03	1.46	
	600	3035	0.96	1.40	2027	0.64	0.97		2428	0.77	1.14	1554
	300	3189	0.51	0.81	2267	0.36	0.59	1131	2714	0.43	0.70	
OUTPUT 57.5 rpm	100	3189	0.17	0.32	2442	0.13	0.25		2924	0.16	0.30	*
1725 rpm INPUT	1800	1939	1.38	1.95	1268	0.91	1.34	1-1/2	1551	1.11	1.60	1-1/2
40	1200	2377	1.13	1.64	1554	0.74	1.12		1901	0.91	1.34	
	900	2631	0.94	1.40	1721	0.61	0.96		2105	0.75	1.15	
	600	2715	0.65	1.02	1905	0.45	0.75	1268	2330	0.56	0.89	
	300	2715	0.32	0.57	2109	0.25	0.46		2580	0.31	0.55	1446
OUTPUT 43.1 rpm	100	2715	0.11	0.23	2258	0.09	0.20	*	2715	0.11	0.23	
1725 rpm INPUT	1800	1871	1.07	1.60	1197	0.68	1.09	1	1496	0.86	1.32	1-1/2
50	1200	2265	0.86	1.34	1450	0.55	0.91		1812	0.69	1.10	
	900	2350	0.67	1.08	1596	0.45	0.77		1995	0.57	0.94	
	600	2350	0.45	0.77	1756	0.33	0.60		2195	0.42	0.73	1496
	300	2350	0.22	0.44	1932	0.18	0.38	1083	2350	0.22	0.44	
OUTPUT 34.5 rpm	100	2350	0.08	0.18	2060	0.07	0.17		2350	0.07	0.18	*
1725 rpm INPUT	1800	1773	0.84	1.35	1143	0.53	0.91	1	1418	0.68	1.11	1
60	1200	2056	0.65	1.09	1338	0.42	0.75		1704	0.54	0.92	
	900	2056	0.49	0.86	1466	0.35	0.64		1867	0.44	0.79	
	600	2056	0.33	0.62	1607	0.26	0.50	1113	2047	0.33	0.62	
	300	2056	0.16	0.36	1761	0.14	0.32		2056	0.16	0.36	1250
OUTPUT 28.8 rpm	100	2056	0.05	0.15	1872	0.05	0.14	*	2056	0.05	0.15	

**Numbers shown in ( ) are exact ratios

★ Mechanical ratings indicated above apply to both non-fan cooled and fan cooled units.

*Motor H.P. exceeds reducer capacity. Output must be limited to torque shown.

Center distance 3.000". Maximum NEMA motor frame size: 215C — 184TC flange.

Thermal input horsepower must not be exceeded for class 1, 2, or 3 service.

REDUCER NO. 5

***SHAFT OVERHUNG AND THRUST LOADS (includes Fan Cooled and Motorized where applicable)

ALL	CB-CT	CV (VERTICAL SHAFT)				L (DROP BEARING)				S (SHAFT MOUNT)			RATIO
INPUT OHL	OUTPUT OHL	OUTPUT UP OHL	OUTPUT DOWN OHL	OUTPUT THRUST DOWN	OUTPUT THRUST UP	OUTPUT UP OHL	OUTPUT DOWN OHL	OUTPUT THRUST DOWN	OUTPUT THRUST UP	OUTPUT THRUST TO BASE	OUTPUT THRUST FROM BASE	OUTPUT OHL ‡ †	
412	1329	1329	1265	940	934	1329	1867	1101	976	2031	2031	2268	1725 rpm INPUT
412	1329	1329	1265	997	989	1329	1867	1135	1004	2172	2172	2268	
412	1329	1329	1265	1020	1011	1329	1867	1164	1029	2286	2286	2268	5
412	1329	1329	1265	1103	1092	1329	1867	1262	1114	2522	2522	2268	(5-1/5)
412	1329	1329	1265	1386	1373	1329	1867	1587	1401	2817	2817	2268	
412	1329	1329	1265	2178	2162	1329	1867	2160	2198	2817	2817	2268	OUTPUT 345 rpm
412	1329	1329	1265	1089	1084	1329	1867	1234	1096	2257	2257	2268	1725 rpm INPUT
412	1329	1329	1265	1160	1153	1329	1867	1317	1169	2462	2462	2268	
412	1329	1329	1265	1218	1210	1329	1867	1385	1229	2627	2627	2268	7-1/2
412	1329	1329	1265	1393	1384	1329	1867	1585	1406	2817	2817	2268	(7-1/5)
412	1329	1329	1265	1892	1882	1329	1867	2151	1906	2817	2817	2268	
412	1329	1329	1265	2916	2905	1329	1867	2160	2935	2817	2817	2268	OUTPUT 230 rpm
412	1329	1329	1265	1298	1293	1329	1867	1467	1307	2619	2619	2268	1725 rpm INPUT
412	1329	1329	1265	1394	1387	1329	1867	1577	1406	2817	2817	2268	
412	1329	1329	1265	1493	1485	1329	1867	1690	1506	2817	2817	2268	10
412	1329	1329	1265	1684	1675	1329	1867	1908	1699	2817	2817	2268	(10-1/3)
412	1329	1329	1265	2131	2120	1329	1867	2160	2151	2817	2817	2268	
412	1329	1329	1265	2960	2960	1329	1867	2160	3024	2817	2817	2268	OUTPUT 167 rpm
412	1329	1329	1265	1603	1599	1329	1867	1786	1602	2817	2817	2268	1725 rpm INPUT
412	1329	1329	1265	1754	1748	1329	1867	1951	1752	2817	2817	2268	
412	1329	1329	1265	1892	1885	1329	1867	2104	1890	2817	2817	2268	15
412	1329	1329	1265	2133	2125	1329	1867	2160	2132	2817	2817	2268	(15-1/2)
412	1329	1329	1265	2714	2706	1329	1867	2160	2715	2817	2817	2268	
412	1329	1329	1265	2960	2960	1329	1867	2160	3024	2817	2817	2268	OUTPUT 115 rpm
412	1329	1329	1265	1792	1787	1329	1867	1993	1789	2817	2817	2268	1725 rpm INPUT
412	1329	1329	1265	1976	1971	1329	1867	2160	1973	2817	2817	2268	
412	1329	1329	1265	2141	2135	1329	1867	2160	2137	2817	2817	2268	20
412	1329	1329	1265	2462	2455	1329	1867	2160	2459	2817	2817	2268	
412	1329	1329	1265	2960	2960	1329	1867	2160	3024	2817	2817	2268	
412	1329	1329	1265	2960	2960	1329	1867	2160	3024	2817	2817	2268	OUTPUT 86.3 rpm
412	1329	1329	1265	1999	1995	1329	1867	2160	1992	2817	2817	2268	1725 rpm INPUT
412	1329	1329	1265	2203	2197	1329	1867	2160	2194	2817	2817	2268	
412	1329	1329	1265	2379	2372	1329	1867	2160	2369	2817	2817	2268	25
412	1329	1329	1265	2680	2673	1329	1867	2160	2669	2817	2817	2268	
412	1329	1329	1265	2960	2960	1329	1867	2160	3024	2817	2817	2268	
412	1329	1329	1265	2960	2960	1329	1867	2160	3024	2817	2817	2268	OUTPUT 69 rpm
412	1329	1329	1265	2140	2136	1329	1867	2160	2133	2817	2817	2268	1725 rpm INPUT
412	1329	1329	1265	2374	2368	1329	1867	2160	2364	2817	2817	2268	
412	1329	1329	1265	2570	2564	1329	1867	2160	2560	2817	2817	2268	30
412	1329	1329	1265	2898	2891	1329	1867	2160	2887	2817	2817	2268	
412	1329	1329	1265	2960	2960	1329	1867	2160	3024	2817	2817	2268	
412	1329	1329	1265	2960	2960	1329	1867	2160	3024	2817	2817	2268	OUTPUT 57.5 rpm
412	1329	1329	1265	2388	2384	1329	1867	2160	2380	2817	2817	2268	1725 rpm INPUT
412	1329	1329	1265	2662	2657	1329	1867	2160	2653	2817	2817	2268	
412	1329	1329	1265	2890	2885	1329	1867	2160	2880	2817	2817	2268	40
412	1329	1329	1265	2960	2960	1329	1867	2160	3024	2817	2817	2268	
412	1329	1329	1265	2960	2960	1329	1867	2160	3024	2817	2817	2268	
412	1329	1329	1265	2960	2960	1329	1867	2160	3024	2817	2817	2268	OUTPUT 43.1 rpm
412	1329	1329	1265	2601	2597	1329	1867	2160	2954	2817	2817	2268	1725 rpm INPUT
412	1329	1329	1265	2908	2903	1329	1867	2160	2899	2817	2817	2268	
412	1329	1329	1265	2960	2960	1329	1867	2160	3024	2817	2817	2268	50
412	1329	1329	1265	2960	2960	1329	1867	2160	3024	2817	2817	2268	
412	1329	1329	1265	2960	2960	1329	1867	2160	3024	2817	2817	2268	
412	1329	1329	1265	2960	2960	1329	1867	2160	3024	2817	2817	2268	OUTPUT 34.5 rpm
412	1329	1329	1265	2789	2785	1329	1867	2160	2781	2817	2817	2268	1725 rpm INPUT
412	1329	1329	1265	2960	2960	1329	1867	2160	3024	2817	2817	2268	
412	1329	1329	1265	2960	2960	1329	1867	2160	3024	2817	2817	2268	60
412	1329	1329	1265	2960	2960	1329	1867	2160	3024	2817	2817	2268	
412	1329	1329	1265	2960	2960	1329	1867	2160	3024	2817	2817	2268	
412	1329	1329	1265	2960	2960	1329	1867	2160	3024	2817	2817	2268	OUTPUT 28.8 rpm

***Overhung load given at one shaft diameter from housing or mounting flange.

‡ O.H.L. based on maximum bore. Use of smaller diameter shaft may limit O.H.L.

† 6.875" from centerline.

5

SINGLE REDUCTION SERIES REDUCER NO. 6

All ratings stated are for A.G.M.A. Class 1 service.

HORSEPOWER AND TORQUE RATINGS

RATIO **		MECHANICAL★				THERMAL★				FAN COOLED – THERMAL★			
		INPUT SPEED RPM	OUTPUT TORQUE IN. LBS	OUTPUT HP	INPUT HP	OUTPUT TORQUE IN. LBS	OUTPUT HP	INPUT HP	GRTMR HP 1800 RPM / O/P TQUE	OUTPUT TORQUE In. LBS	OUTPUT HP	INPUT HP	
1725rpm INPUT		1800	1975	10.92	11.78	1383	7.64	8.31	7-1/2	1580	8.74	9.47	10
		1200	2406	8.87	9.66	1684	6.21	6.81		1925	7.09	7.76	
5		900	2915	8.06	8.83	2040	5.64	6.23		2332	6.45	7.10	
(5-1/6)		600	3532	6.51	7.22	2472	4.56	5.09	1244	2825	5.21	5.00	1580
		300	3869	3.56	4.08	2995	2.76	3.18		3423	3.15	3.62	
OUTPUT 345 rpm		100	3869	1.19	1.45	3404	1.05	1.28		3869	1.19	1.45	*
1725 rpm INPUT		1800	2235	8.51	9.36	1556	5.92	6.58	7-1/2	1788	6.81	7.53	7-1/2
		1200	2748	6.98	7.76	1913	4.86	5.45		2198	5.58	6.24	
7-1/2		900	3297	6.28	7.04	2295	4.37	4.94		2638	5.02	5.66	
		600	3956	5.02	5.71	2753	3.50	4.01	1556	3165	4.02	4.60	
		300	4075	2.59	3.06	3303	2.10	2.50		3797	2.41	2.86	1780
OUTPUT 230 rpm		100	4075	0.86	1.10	3730	0.79	1.02	*	4075	0.86	1.10	
1725 rpm INPUT		1800	2419	6.69	7.56	1679	4.64	5.31	5	1935	5.35	6.09	7-1/2
		1200	2984	5.50	6.31	2071	3.82	4.43		2387	4.40	5.08	
10		900	3566	4.93	5.71	2475	3.42	4.01		2853	3.94	4.60	
(10-1/3)		600	4075	3.75	4.44	2957	2.72	3.26		3409	3.14	3.74	
		300	4075	1.88	2.34	3534	1.63	2.04	1576	4073	1.88	2.34	1935
OUTPUT 172.5 rpm		100	4075	0.63	0.86	3979	0.61	0.84		4075	0.63	0.86	*
1725 rpm INPUT		1800	2573	4.90	5.80	1770	3.37	4.05	3	2059	3.92	4.68	5
		1200	3181	4.04	4.87	2189	2.78	3.40		2545	3.23	3.93	
15		900	3790	3.61	4.42	2608	2.48	3.08		3032	2.89	3.56	
		600	4075	2.59	3.26	3107	1.97	2.52		3613	2.29	2.90	
		300	4075	1.29	1.74	3702	1.18	1.59	1286	4075	1.29	1.74	2059
OUTPUT 115 rpm		100	4075	0.43	0.66	4075	0.43	0.66		4075	0.43	0.66	*
1725 rpm INPUT		1800	2744	3.92	4.70	1864	2.66	3.26	3	2195	3.14	3.80	5
		1200	3430	3.27	4.00	2330	2.22	2.77		2744	2.61	3.23	
20		900	3661	2.61	3.26	2658	1.90	2.41		3131	2.24	2.81	
		600	3661	1.74	2.25	3033	1.44	1.89		3573	1.70	2.20	
		300	3661	0.87	1.22	3461	0.82	1.16	1705	3661	0.87	1.22	2195
OUTPUT 86.3 rpm		100	3661	0.29	0.47	3661	0.29	0.47		3661	0.29	0.47	*
1725 rpm INPUT		1800	2582	2.95	3.90	1740	1.99	2.70	3	2066	2.36	3.16	3
		1200	3157	2.41	3.28	2128	1.62	2.26		2526	1.92	2.66	
25		900	3810	2.18	3.04	2568	1.47	2.09		3048	1.74	2.46	
		600	4598	1.75	2.54	3099	1.18	1.76		3678	1.40	2.06	
		300	4804	0.92	1.46	3740	0.71	1.16	1740	4439	0.85	1.35	1952
OUTPUT 69 rpm		100	4804	0.31	0.58	4239	0.27	0.52	*	4804	0.31	0.58	
1725 rpm INPUT		1800	2653	2.53	3.43	1772	1.69	2.36	2	2122	2.02	2.79	3
		1200	3284	2.08	2.93	2194	1.39	2.01		2627	1.67	2.37	
30		900	3905	1.86	2.68	2609	1.24	1.84		3124	1.49	2.17	
		600	4075	1.29	1.96	3103	0.99	1.52		3716	1.18	1.80	
		300	4075	0.65	1.09	3690	0.59	1.00	1476	4075	0.65	1.09	2122
OUTPUT 57.5 rpm		100	4075	0.22	0.44	4075	0.22	0.44		4075	0.22	0.44	*
1725 rpm INPUT		1800	2748	1.96	2.72	1797	1.28	1.85	2	2199	1.57	2.22	2
		1200	3433	1.63	2.34	2245	1.07	1.58		2747	1.31	1.90	
40		900	3600	1.29	1.90	2557	0.91	1.39		3128	1.12	1.67	
		600	3600	0.86	1.34	2913	0.69	1.11	1797	3563	0.85	1.33	
		300	3600	0.43	0.76	3318	0.40	0.71		3600	0.43	0.76	1963
OUTPUT 43.1 rpm		100	3600	0.14	0.31	3600	0.14	0.31	*	3600	0.14	0.31	
1725 rpm INPUT		1800	2565	1.47	2.17	1641	0.94	1.46	1-1/2	2052	1.17	1.78	2
		1200	3000	1.14	1.77	2118	0.81	1.30		2648	1.01	1.58	
50		900	3000	0.86	1.39	2406	0.69	1.14		3000	0.86	1.39	
		600	3000	0.57	0.99	2734	0.52	0.91		3000	0.57	0.99	
		300	3000	0.29	0.57	3000	0.29	0.57	1641	3000	0.29	0.57	2052
OUTPUT 34.5 rpm		100	3000	0.10	0.24	3000	0.10	0.24	*	3000	0.10	0.24	*
1725 rpm INPUT		1800	2399	1.14	1.98	1507	0.72	1.32	1-1/2	1919	0.91	1.62	1-1/2
		1200	2850	0.90	1.65	1866	0.59	1.14		2376	0.75	1.41	
60		900	2850	0.68	1.31	2218	0.53	1.05		2825	0.67	1.30	
		600	2850	0.45	0.95	2636	0.42	0.89		2850	0.45	0.95	
		300	2850	0.23	0.56	2850	0.23	0.56	1507	2850	0.23	0.56	1751
OUTPUT 28.8 rpm		100	2850	0.08	0.25	2850	0.08	0.25	*	2850	0.08	0.25	

***Numbers shown in ( ) are exact ratios*

★ *Mechanical ratings indicated above apply to both non-fan cooled and fan cooled units.*

**Motor H.P. exceeds reducer capacity. Output must be limited to torque shown.*

Center distance 3.500". Maximum nema motor frame size: 215C — 184TC flange.

Thermal input horsepower must not be exceeded for class 1, 2, or 3 service.

REDUCER NO. **6**

***SHAFT OVERHUNG AND THRUST LOADS (includes Fan Cooled and Motorized where applicable)

ALL	CB-CT	CV (VERTICAL SHAFT)				L (DROP BEARING)				S (SHAFT MOUNT)			RATIO
INPUT OHL	OUTPUT OHL	OUTPUT UP OHL	OUTPUT DOWN OHL	OUTPUT THRUST DOWN	OUTPUT THRUST UP	OUTPUT UP OHL	OUTPUT DOWN OHL	OUTPUT THRUST DOWN	OUTPUT THRUST UP	OUTPUT THRUST TO BASE	OUTPUT THRUST FROM BASE	OUTPUT OHL ‡ †	
654	1391	1391	1309	1052	1051	2089	2532	1259	1061	2996	2996	2268	1725rpm INPUT
654	1391	1391	1309	1102	1100	2089	2532	1337	1113	3270	3024	2268	
654	1391	1391	1309	1141	1139	2089	2532	1399	1154	3486	3024	2268	5
654	1391	1391	1309	1182	1180	2089	2532	1477	1199	3799	3024	2268	(5-1/6)
654	1391	1391	1309	1417	1414	2089	2532	1782	1440	3920	3024	2268	
654	1391	1391	1309	2251	2247	2089	2532	2176	2283	3920	3024	2268	OUTPUT 345 rpm
654	1391	1391	1309	1329	1328	2089	2532	1560	1334	3585	3024	2268	1725 rpm INPUT
654	1391	1391	1309	1437	1435	2089	2532	1700	1443	3920	3024	2268	
654	1391	1391	1309	1481	1479	2089	2532	1769	1489	3920	3024	2268	7-1/2
654	1391	1391	1309	1603	1601	2089	2532	1930	1613	3920	3024	2268	
654	1391	1391	1309	2163	2160	2089	2532	2176	2174	3920	3024	2268	
654	1391	1391	1309	3379	3024	2089	2532	2176	3024	3920	3024	2268	OUTPUT 230 rpm
654	1391	1391	1309	1580	1578	2089	2532	1828	1579	3920	3024	2268	1725 rpm INPUT
654	1391	1391	1309	1725	1723	2089	2532	2006	1724	3920	3024	2268	
654	1391	1391	1309	1806	1804	2089	2532	2114	1806	3920	3024	2268	10
654	1391	1391	1309	2023	2021	2089	2532	2176	2023	3920	3024	2268	(10-1/3)
654	1391	1391	1309	2670	2667	2089	2532	2176	2671	3920	3024	2268	
654	1391	1391	1309	3385	3024	2089	2532	2176	3024	3920	3024	2268	OUTPUT 172.5 rpm
654	1391	1391	1309	1875	1873	2089	2532	2147	1869	3920	3024	2268	1725 rpm INPUT
654	1391	1391	1309	2059	2057	2089	2532	2176	2052	3920	3024	2268	
654	1391	1391	1309	2180	2177	2089	2532	2176	2172	3920	3024	2268	15
654	1391	1391	1309	2487	2485	2089	2532	2176	2479	3920	3024	2268	
654	1391	1391	1309	3220	3024	2089	2532	2176	3024	3920	3024	2268	
654	1391	1391	1309	3385	3024	2089	2532	2176	3024	3920	3024	2268	OUTPUT 115 rpm
654	1391	1391	1309	2076	2074	2089	2532	2176	2073	3920	3024	2268	1725 rpm INPUT
654	1391	1391	1309	2281	2279	2089	2532	2176	2277	3920	3024	2268	
654	1391	1391	1309	2493	2491	2089	2532	2176	2489	3920	3024	2268	20
654	1391	1391	1309	2889	2887	2089	2532	2176	2886	3920	3024	2268	
654	1391	1391	1309	3385	3024	2089	2532	2176	3024	3920	3024	2268	
654	1391	1391	1309	3385	3024	2089	2532	2176	3024	3920	3024	2268	OUTPUT 86.3 rpm
654	1391	1391	1309	2345	2344	2089	2532	2176	2336	3920	3024	2268	1725 rpm INPUT
654	1391	1391	1309	2604	2603	2089	2532	2176	2594	3920	3024	2268	
654	1391	1391	1309	2778	2776	2089	2532	2176	2765	3920	3024	2268	25
654	1391	1391	1309	3080	3024	2089	2532	2176	3024	3920	3024	2268	
654	1391	1391	1309	3385	3024	2089	2532	2176	3024	3920	3024	2268	
654	1391	1391	1309	3385	3024	2089	2532	2176	3024	3920	3024	2268	OUTPUT 69 rpm
654	1391	1391	1309	2498	2497	2089	2532	2176	2489	3920	3024	2268	1725 rpm INPUT
654	1391	1391	1309	2771	2769	2089	2532	2176	2760	3920	3024	2268	
654	1391	1391	1309	2968	2966	2089	2532	2176	2955	3920	3024	2268	30
654	1391	1391	1309	3385	3024	2089	2532	2176	3024	3920	3024	2268	
654	1391	1391	1309	3385	3024	2089	2532	2176	3024	3920	3024	2268	
654	1391	1391	1309	3385	3024	2089	2532	2176	3024	3920	3024	2268	OUTPUT 57.5 rpm
654	1391	1391	1309	2778	2777	2089	2532	2176	2770	3920	3024	2268	1725 rpm INPUT
654	1391	1391	1309	3086	3024	2089	2532	2176	3024	3920	3024	2268	
654	1391	1391	1309	3379	3024	2089	2532	2176	3024	3920	3024	2268	40
654	1391	1391	1309	3385	3024	2089	2532	2176	3024	3920	3024	2268	
654	1391	1391	1309	3385	3024	2089	2532	2176	3024	3920	3024	2268	
654	1391	1391	1309	3385	3024	2089	2532	2176	3024	3920	3024	2268	OUTPUT 43.1 rpm
654	1391	1391	1309	3032	3024	2089	2532	2176	3024	3920	3024	2268	1725 rpm INPUT
654	1391	1391	1309	3385	3024	2089	2532	2176	3024	3920	3024	2268	
654	1391	1391	1309	3385	3024	2089	2532	2176	3024	3920	3024	2268	50
654	1391	1391	1309	3385	3024	2089	2532	2176	3024	3920	3024	2268	
654	1391	1391	1309	3385	3024	2089	2532	2176	3024	3920	3024	2268	
654	1391	1391	1309	3385	3024	2089	2532	2176	3024	3920	3024	2268	OUTPUT 34.5 rpm
654	1391	1391	1309	3249	3024	2089	2532	2176	3024	3920	3024	2268	1725 rpm INPUT
654	1391	1391	1309	3385	3024	2089	2532	2176	3024	3920	3024	2268	
654	1391	1391	1309	3385	3024	2089	2532	2176	3024	3920	3024	2268	60
654	1391	1391	1309	3385	3024	2089	2532	2176	3024	3920	3024	2268	
654	1391	1391	1309	3385	3024	2089	2532	2176	3024	3920	3024	2268	
654	1391	1391	1309	3385	3024	2089	2532	2176	3024	3920	3024	2268	OUTPUT 28.8 rpm

****Overhung load given at one shaft diameter from housing or mounting flange.*

‡ O.H.L. based on maximum bore. Use of smaller diameter shaft may limit O.H.L.

† 6.6875" from centerline.

5

SINGLE REDUCTION SERIES REDUCER NO. 7

All ratings stated are for A.G.M.A. Class 1 service.

HORSEPOWER AND TORQUE RATINGS

RATIO **		MECHANICAL★			THERMAL★				FAN COOLED — THERMAL★			
	INPUT SPEED RPM	OUTPUT TORQUE IN LBS	OUTPUT HP	INPUT HP	OUTPUT TORQUE IN LBS	OUTPUT HP	INPUT HP	GRTMR HP 1800 RPM / O/P TQUE	OUTPUT TORQUE In. LBS	OUTPUT HP	INPUT HP	
1725 rpm INPUT	1800	3008	11.85	12.98	2097	8.26	9.14	10	2407	9.48	10.45	10
7-1/2	1200	3792	9.96	10.98	2643	6.94	7.72		3034	7.97	8.83	
(7-1/4)	900	4435	8.74	9.69	3091	6.09	6.81		3548	6.99	7.79	
	600	5429	7.13	8.00	3784	4.97	5.62	2097	4343	5.70	6.43	
	300	6573	4.32	4.99	4632	3.04	3.55		5317	3.49	4.05	2300
OUTPUT 230 rpm	100	6573	1.44	1.77	5301	1.16	1.44	*	6084	1.33	1.65	
1725 rpm INPUT	1800	3304	9.68	10.71	2293	6.72	7.53	7-1/2	2643	7.74	8.63	10
10	1200	4129	8.06	8.99	2866	5.60	6.31		3303	6.45	7.24	
(9-3/4)	900	4829	7.06	7.92	3346	4.90	5.56		3857	5.65	6.38	
	600	5630	5.50	6.25	3907	3.82	4.38		4504	4.40	5.03	
	300	6109	2.98	3.51	4562	2.23	2.65	2282	5259	2.57	3.04	2643
OUTPUT 172.5 rpm	100	6109	0.99	1.76	5059	0.82	1.05		5832	0.95	1.20	*
1725 rpm INPUT	1800	3496	6.89	8.06	2402	4.73	5.64	5	2797	5.51	6.51	7-1/2
15	1200	4265	5.60	6.64	2930	3.85	4.64		3412	4.48	5.36	
(14-1/2)	900	5160	5.08	6.09	3544	3.49	4.24		4128	4.07	4.91	
	600	6242	4.10	5.01	4287	2.82	3.49		4993	3.28	4.04	
	300	6611	2.17	2.80	5186	1.70	2.22	2113	6040	1.98	2.56	2797
OUTPUT 115 rpm	100	6611	0.72	1.04	5887	0.64	0.93		6611	0.72	1.04	*
1725 rpm INPUT	1800	3697	5.28	6.33	2514	3.59	4.41	5	2958	4.22	5.13	5
20	1200	4629	4.41	5.35	3147	3.00	3.71		3703	3.53	4.32	
	900	5360	3.83	4.70	3645	2.60	3.26		4288	3.06	3.80	
	600	6149	2.93	3.68	4221	2.01	2.57		4966	2.36	3.00	
	300	6149	1.46	1.96	4889	1.16	1.58	2514	5752	1.37	1.84	2878
OUTPUT 86.3 rpm	100	6149	0.49	0.74	5391	0.43	0.65	*	6149	0.49	0.74	
1725 rpm INPUT	1800	3743	4.11	5.08	2515	2.76	3.52	3	2994	3.29	4.13	5
25	1200	4678	3.43	4.29	3143	2.30	2.96		3742	2.74	3.47	
(26)	900	5050	2.77	3.53	3585	1.97	2.56		4267	2.34	3.01	
	600	5050	1.85	2.43	4088	1.50	2.00		4867	1.78	2.35	
	300	5050	0.92	1.31	4662	0.85	1.22	2108	5050	0.92	1.31	2994
OUTPUT 69 rpm	100	5050	0.31	0.50	5050	0.31	0.50		5050	0.31	0.50	*
1725 rpm INPUT	1800	3622	3.49	4.64	2419	2.30	3.20	3	2898	2.76	3.77	5
30	1200	4429	2.81	3.87	2959	1.88	2.66		3543	2.25	3.14	
	900	5345	2.54	3.56	3570	1.70	2.44		4276	2.04	2.89	
	600	6450	2.05	2.97	4309	1.37	2.03		5160	1.64	2.40	
	300	6664	1.06	1.68	5199	0.83	1.33	2248	6227	0.99	1.57	2898
OUTPUT 57.5 rpm	100	6664	0.35	0.66	5893	0.31	0.59		6664	0.35	0.66	*
1725 rpm INPUT	1800	3710	2.72	3.73	2430	1.78	2.55	2	2968	2.17	3.05	3
40	1200	4646	2.27	3.17	3043	1.49	2.16		3716	1.81	2.59	
(39)	900	5293	1.94	2.77	3516	1.29	1.90		4295	1.57	2.28	
	600	5293	1.29	1.93	4064	0.99	1.52		4963	1.21	1.82	
	300	5293	0.65	1.07	4696	0.57	0.96	1829	5293	0.65	1.07	2914
OUTPUT 43.1 rpm	100	5293	0.22	0.43	5172	0.21	0.42		5293	0.22	0.43	
1725 rpm INPUT	1800	3564	2.00	2.92	2271	1.28	1.98	2	2851	1.60	2.40	2
50	1200	4452	1.66	2.48	2845	1.06	1.67		3562	1.33	2.03	
(51)	900	4770	1.34	2.05	3240	0.91	1.45		4056	1.14	1.77	
	600	4770	0.89	1.44	3690	0.69	1.15		4619	0.86	1.40	
	300	4770	0.45	0.81	4202	0.39	0.73	2271	4770	0.45	0.81	2302
OUTPUT 34.5 rpm	100	4770	0.15	0.33	4583	0.14	0.32	*	4770	0.15	0.33	
1725 rpm INPUT	1800	3283	1.56	2.43	2062	0.98	1.64	1-1/2	2626	1.25	2.01	2
60	1200	4237	1.35	2.13	2661	0.84	1.42		3390	1.08	1.75	
	900	4635	1.10	1.79	3023	0.72	1.24		3851	0.92	1.52	
	600	4635	0.74	1.27	3434	0.55	0.98		4374	0.69	1.21	
	300	4635	0.37	0.72	3901	0.31	0.62	1838	4635	0.37	0.72	2613
OUTPUT 28.8 rpm	100	4635	0.12	0.30	4247	0.11	0.28		4635	0.12	0.30	

**Numbers shown in ( ) are exact ratios

★ *Mechanical ratings indicated above apply to both non-fan cooled and fan cooled units.*

*Motor H.P. exceeds reducer capacity. Output must be limited to torque shown.

Center distance 4.000". Maximum NEMA motor frame size: 215C — 184TC flange.

Thermal input horsepower must not be exceeded for class 1, 2, or 3 service.

REDUCER NO. 7

***SHAFT OVERHUNG AND THRUST LOADS (includes Fan Cooled and Motorized where applicable)

ALL	CB-CT	CV (VERTICAL SHAFT)				L (DROP BEARING)				S (SHAFT MOUNT)			RATIO
INPUT OHL	OUTPUT OHL	OUTPUT UP OHL	OUTPUT DOWN OHL	OUTPUT THRUST DOWN	OUTPUT THRUST UP	OUTPUT UP OHL	OUTPUT DOWN OHL	OUTPUT THRUST DOWN	OUTPUT THRUST UP	OUTPUT THRUST TO BASE	OUTPUT THRUST FROM BASE	OUTPUT OHL ‡†	
525	1924	1924	1795	1799	1793	2871	2428	734	1802	4208	3024	2268	1725 rpm INPUT
525	1924	1924	1795	1937	1930	2871	2428	738	1940	4208	3024	2268	
525	1924	1924	1795	2032	2032	2871	2428	728	2036	4208	3024	2268	7-1/2
525	1924	1924	1795	2184	2173	2871	2428	716	2190	4208	3024	2268	(7-1/4)
525	1924	1924	1795	2691	2678	2871	2428	885	2700	4208	3024	2268	
525	1924	1924	1795	3516	3024	2871	2428	1766	3024	4208	3024	2268	OUTPUT 230 rpm
525	1924	1924	1795	1972	1963	2871	2428	823	1989	4208	3024	2268	1725 rpm INPUT
525	1924	1924	1795	2133	2122	2871	2428	840	2155	4208	3024	2268	
525	1924	1924	1795	2240	2228	2871	2428	837	2267	4208	3024	2268	10
525	1924	1924	1795	2475	2461	2871	2428	894	2507	4208	3024	2268	(9-3/4)
525	1924	1924	1795	3209	3024	2871	2428	1255	3024	4208	3024	2268	
525	1924	1924	1795	3516	3024	2871	2428	2228	3024	4208	3024	2268	OUTPUT 172.5 rpm
525	1924	1924	1795	2503	2498	2871	2428	1180	2497	4208	3024	2268	1725 rpm INPUT
525	1924	1924	1795	2769	2762	2871	2428	1276	2762	4208	3024	2268	
525	1924	1924	1795	2930	2922	2871	2428	1306	2922	4208	3024	2268	15
525	1924	1924	1795	3225	3024	2871	2428	1394	3024	4208	3024	2268	(14-1/2)
525	1924	1924	1795	3516	3024	2871	2428	1871	3024	4208	3024	2268	
525	1924	1924	1795	3516	3024	2871	2428	2983	3024	4208	3024	2268	OUTPUT 115 rpm
525	1924	1924	1795	2825	2819	2871	2428	1368	2822	4208	3024	2268	1725 rpm INPUT
525	1924	1924	1795	3114	3024	2871	2428	1470	3024	4208	3024	2268	
525	1924	1924	1795	3338	3024	2871	2428	1549	3024	4208	3024	2268	20
525	1924	1924	1795	3516	3024	2871	2428	1729	3024	4208	3024	2268	
525	1924	1924	1795	3516	3024	2871	2428	2320	3024	4208	3024	2268	
525	1924	1924	1795	3516	3024	2871	2428	3200	3024	4208	3024	2268	OUTPUT 86.3 rpm
525	1924	1924	1795	3136	3024	2871	2428	1556	3024	4208	3024	2268	1725 rpm INPUT
525	1924	1924	1795	3470	3024	2871	2428	1688	3024	4208	3024	2268	
525	1924	1924	1795	3516	3024	2871	2428	1843	3024	4208	3024	2268	25
525	1924	1924	1795	3516	3024	2871	2428	2164	3024	4208	3024	2268	(26)
525	1924	1924	1795	3516	3024	2871	2428	2813	3024	4208	3024	2268	
525	1924	1924	1795	3516	3024	2871	2428	3200	3024	4208	3024	2268	OUTPUT 69 rpm
525	1924	1924	1795	3380	3024	2871	2428	1722	3024	4208	3024	2268	1725 rpm INPUT
525	1924	1924	1795	3516	3024	2871	2428	1899	3024	4208	3024	2268	
525	1924	1924	1795	3516	3024	2871	2428	1997	3024	4208	3024	2268	30
525	1924	1924	1795	3516	3024	2871	2428	2193	3024	4208	3024	2268	
525	1924	1924	1795	3516	3024	2871	2428	2840	3024	4208	3024	2268	
525	1924	1924	1795	3516	3024	2871	2428	3200	3024	4208	3024	2268	OUTPUT 57.5 rpm
525	1924	1924	1795	3516	3024	2871	2428	1913	3024	4208	3024	2268	1725 rpm INPUT
525	1924	1924	1795	3516	3024	2871	2428	2098	3024	4208	3024	2268	
525	1924	1924	1795	3516	3024	2871	2428	2256	3024	4208	3024	2268	40
525	1924	1924	1795	3516	3024	2871	2428	2622	3024	4208	3024	2268	(39)
525	1924	1924	1795	3516	3024	2871	2428	3200	3024	4208	3024	2268	
525	1924	1924	1795	3516	3024	2871	2428	3200	3024	4208	3024	2268	OUTPUT 43.1 rpm
525	1924	1924	1795	3516	3024	2871	2428	2137	3024	4208	3024	2268	1725 rpm INPUT
525	1924	1924	1795	3516	3024	2871	2428	2359	3024	4208	3024	2268	
525	1924	1924	1795	3516	3024	2871	2428	2576	3024	4208	3024	2268	50
525	1924	1924	1795	3516	3024	2871	2428	2975	3024	4208	3024	2268	(51)
525	1924	1924	1795	3516	3024	2871	2428	3200	3024	4208	3024	2268	
525	1924	1924	1795	3516	3024	2871	2428	3200	3024	4208	3024	2268	OUTPUT 34.5 rpm
525	1924	1924	1795	3516	3024	2871	2428	2321	3024	4208	3024	2268	1725 rpm INPUT
525	1924	1924	1795	3516	3024	2871	2428	2558	3024	4208	3024	2268	
525	1924	1924	1795	3516	3024	2871	2428	2784	3024	4208	3024	2268	60
525	1924	1924	1795	3516	3024	2871	2428	3200	3024	4208	3024	2268	
525	1924	1924	1795	3516	3024	2871	2428	3200	3024	4208	3024	2268	
525	1924	1924	1795	3516	3024	2871	2428	3200	3024	4208	3024	2268	OUTPUT 28.8 rpm

***Overhung load given at one shaft diameter from housing or mounting flange.

‡ O.H.L. based on maximum bore. Use of smaller diameter shaft may limit O.H.L.

† 8.1875" from centerline.

5

SINGLE REDUCTION SERIES REDUCER NO. 8

All ratings stated are for A.G.M.A. Class 1 service.

HORSEPOWER AND TORQUE RATINGS

RATIO **	INPUT SPEED RPM	MECHANICAL★ OUTPUT TORQUE IN. LBS.	MECHANICAL★ OUTPUT HP	MECHANICAL★ INPUT HP	THERMAL★ OUTPUT TORQUE IN. LBS	THERMAL★ OUTPUT HP	THERMAL★ INPUT HP	GRTMR HP 1800 RPM / O/P TQUE	FAN COOLED – THERMAL★ OUTPUT TORQUE In. LBS	FAN COOLED – THERMAL★ OUTPUT HP	FAN COOLED – THERMAL★ INPUT HP	
1725 rpm INPUT	1800	4215	15.53	16.89	2942	10.84	11.92	10	3372	12.43	13.60	15
	1200	5313	13.05	14.27	3708	9.11	10.05		4250	10.44	11.48	
7-1/2	900	6219	11.46	12.59	4341	8.00	8.87		4975	9.17	10.13	
(7-3/4)	600	7555	7.28	10.30	5273	6.48	7.25	2448	6044	7.42	8.28	3372
	300	9178	5.64	6.42	6406	3.94	4.52		7342	4.51	5.16	
OUTPUT 230 rpm	100	10449	2.14	2.58	7293	1.49	1.82		8359	1.71	2.08	*
1725 rpm INPUT	1800	4466	13.08	14.39	3100	9.08	10.12	10	3573	10.47	11.60	15
	1200	5554	10.85	12.00	3854	7.53	8.42		4443	8.68	9.66	
10	900	6558	9.61	10.69	4551	6.67	7.49		5247	7.68	8.60	
(9-3/4)	600	7744	7.56	8.51	5375	5.25	5.97		6195	6.05	6.85	3573
	300	8622	4.21	4.89	6347	3.10	3.63	3059	7316	3.57	4.17	
OUTPUT 172.5 rpm	100	8622	1.40	1.75	7090	1.15	1.45		8173	1.33	1.66	*
1725 rpm INPUT	1800	4845	9.07	10.26	3329	6.23	7.19	7-1/2	3876	7.26	8.30	7-1/2
	1200	6064	7.57	8.62	4166	5.20	6.02		4851	6.06	6.95	
15	900	6510	6.10	7.00	4776	4.47	5.20		5561	5.21	6.02	
(15-1/4)	600	6510	4.06	4.76	5475	3.42	4.03	3329	6375	3.98	4.67	
	300	6510	2.03	2.49	6276	1.96	2.40		6510	2.03	2.49	3482
OUTPUT 115 rpm	100	6510	0.68	0.91	6510	0.68	0.91	*	6510	0.68	0.91	
1725 rpm INPUT	1800	4981	7.11	8.32	3392	4.84	5.81	5	3985	5.69	6.75	7-1/2
	1200	6231	5.93	7.00	4243	4.04	4.86		4985	4.75	5.66	
20	900	7125	5.09	6.06	4852	3.46	4.20		5700	4.07	4.89	
	600	8148	3.88	4.70	5549	2.64	3.26		6518	3.10	3.80	3985
	300	8970	2.14	2.72	6345	1.51	1.96	2882	7454	1.77	2.28	
OUTPUT 86.3 rpm	100	8970	0.71	1.01	6938	0.55	0.80		8151	0.65	0.92	*
1725 rpm INPUT	1800	4861	5.55	6.71	3271	3.74	4.66	5	3889	4.44	5.45	5
	1200	6280	4.78	5.82	4227	3.22	4.02		5024	3.83	4.72	
25	900	7138	4.08	5.01	4804	2.74	3.46		5711	3.26	4.06	
	600	7900	3.01	3.79	5461	2.08	2.68	3271	6491	2.47	3.14	
	300	7900	1.50	2.01	6207	1.18	1.61		7378	1.41	1.89	3536
OUTPUT 69.0 rpm	100	7900	0.50	0.76	6760	0.43	0.66	*	7900	0.50	0.76	
1725 rpm INPUT	1800	5096	4.85	6.25	3404	3.24	4.32	5	4077	3.88	5.09	5
	1200	6289	3.99	5.23	4201	2.67	3.60		5032	3.19	4.24	
30	900	7511	3.58	4.74	5017	2.39	3.25		6008	2.86	3.85	
	600	8969	2.85	3.88	5991	1.90	2.66	3404	7175	2.28	3.15	
	300	10576	1.68	2.45	7154	1.14	1.70		8568	1.36	2.01	3999
OUTPUT 57.5 rpm	100	10576	0.56	0.95	8053	0.43	0.74	*	9644	0.51	0.88	
1725 rpm INPUT	1800	5054	4.12	5.57	3336	2.72	3.82	3	4043	3.30	4.54	5
	1200	6181	3.26	4.63	4080	2.22	3.16		4945	2.69	3.77	
35	900	[illegible]	[illegible]	[illegible]	[illegible]	[illegible]	2.89		5967	2.43	3.45	
	600	8965	2.44	3.52	5939	1.62	2.40		7199	1.96	2.86	4043
	300	[illegible]	[illegible]	[illegible]	[illegible]	[illegible]	1.57	2527	8686	1.18	1.87	
OUTPUT 49.3 rpm	100	8965	0.41	0.77	8121	0.37	0.70		8965	0.41	0.77	*
1725 rpm INPUT	1800	5063	3.71	4.94	3316	2.43	3.38	3	4050	2.97	4.04	5
	1200	6340	3.10	4.18	4152	2.03	2.85		5072	2.48	3.41	
40	900	7325	2.68	3.68	4798	1.76	2.50		5860	2.15	2.99	
(39)	600	7900	1.93	2.74	5543	1.35	1.98		6771	1.65	2.38	4050
	300	7900	0.96	1.50	6405	0.78	1.24	2883	7823	0.96	1.48	
OUTPUT 43.1 rpm	100	7900	0.32	0.60	7052	0.29	0.54		7900	0.32	0.60	*
1725 rpm INPUT	1800	4868	2.73	3.96	3106	1.74	2.68	3	3894	2.18	3.26	3
	1200	6088	2.27	3.36	3884	1.45	2.26		4870	1.82	2.75	
50	900	7092	1.99	2.99	4525	1.27	2.00		5392	1.68	2.56	
(51)	600	7180	1.34	2.12	5272	0.98	1.61	3106	6610	1.23	1.97	
	300	7180	0.67	1.18	6141	0.57	1.03		7180	0.67	1.18	3539
OUTPUT 34.5 rpm	100	7180	0.22	0.49	6800	0.21	0.47	*	7180	0.22	0.49	
1725 rpm INPUT	1800	4575	2.14	3.23	2869	1.34	2.19	2	3660	1.71	2.67	3
	1200	5715	1.78	2.73	3584	1.12	1.83		4572	1.43	2.25	
60	900	6509	1.52	2.38	4081	0.96	1.58		5207	1.22	1.95	
(61)	600	6510	1.02	1.67	4648	0.73	1.25		5930	0.93	1.54	
	300	6510	0.51	0.94	5293	0.41	0.79	2561	6510	0.51	0.94	3660
OUTPUT 28.8 rpm	100	6510	0.17	0.39	5773	0.15	0.36		6510	0.17	0.39	*

NO LONGER AVAILABLE AS STANDARD RATIO

**Numbers shown in ( ) are exact ratios

★ *Mechanical ratings indicated above apply to both non-fan cooled and fan cooled units.*

*Motor H.P. exceeds reducer capacity. Output must be limited to torque shown.

Center distance 4.600". Maximum nema motor frame size: 215C — 184TC flange.

Thermal input horsepower must not be exceeded for class 1, 2, or 3 service.

REDUCER NO. 8

***SHAFT OVERHUNG AND THRUST LOADS (includes Fan Cooled and Motorized where applicable)

ALL	CB-CT	CV (VERTICAL SHAFT)				L (DROP BEARING)				S (SHAFT MOUNT)			RATIO
INPUT OHL	OUTPUT OHL	OUTPUT UP OHL	OUTPUT DOWN OHL	OUTPUT THRUST DOWN	OUTPUT THRUST UP	OUTPUT UP OHL	OUTPUT DOWN OHL	OUTPUT THRUST DOWN	OUTPUT THRUST UP	OUTPUT THRUST TO BASE	OUTPUT THRUST FROM BASE	OUTPUT OHL ‡†	
586	2870	2870	2735	1627	1627	2870	2773	1674	1653	4866	4464	3636	1725 rpm INPUT
586	2870	2870	2735	1704	1704	2870	2773	1764	1737	4866	4464	3636	
586	2870	2870	2735	1761	1761	2870	2773	1832	1800	4866	4464	3636	7-1/2
586	2870	2870	2735	1855	1855	2870	2773	1942	1904	4866	4464	3636	(7-3/4)
586	2870	2870	2735	2278	2278	2870	2773	2387	2340	4866	4464	3636	
586	2870	2870	2735	3516	3516	2870	2773	3516	3675	4866	4464	3636	OUTPUT 230 rpm
586	2870	2870	2735	1801	1801	2870	2773	1849	1826	4866	4464	3636	1725 rpm INPUT
586	2870	2870	2735	1916	1916	2870	2773	1977	1948	4866	4464	3636	
586	2870	2870	2735	1981	1981	2870	2773	2052	2018	4866	4464	3636	10
586	2870	2870	2735	2151	2151	2870	2773	2237	2196	4866	4464	3636	(9-3/4)
586	2870	2870	2735	2799	2799	2870	2773	2899	2853	4866	4464	3636	
586	2870	2870	2735	3516	3516	2870	2773	3516	4464	4866	4464	3636	OUTPUT 172.5 rpm
586	2870	2870	2735	2283	2283	2870	2773	2321	2299	4866	4464	3636	1725 rpm INPUT
586	2870	2870	2735	2472	2472	2870	2773	2520	2492	4866	4464	3636	
586	2870	2870	2735	2705	2705	2870	2773	2757	2726	4866	4464	3636	15
586	2870	2870	2735	3189	3189	2870	2773	3242	3212	4866	4464	3636	(15-1/4)
586	2870	2870	2735	3516	3516	2870	2773	3516	4198	4866	4464	3636	
586	2870	2870	2735	3516	3516	2870	2773	3516	4464	4866	4464	3636	OUTPUT 115 rpm
586	2870	2870	2735	2651	2651	2870	2773	2680	2657	4866	4464	3636	1725 rpm INPUT
586	2870	2870	2735	2901	2901	2870	2773	2937	2908	4866	4464	3636	
586	2870	2870	2735	3103	3103	2870	2773	3145	3113	4866	4464	3636	20
586	2870	2870	2735	3471	3471	2870	2773	3516	3483	4866	4464	3636	
586	2870	2870	2735	3516	3516	2870	2773	3516	4425	4866	4464	3636	
586	2870	2870	2735	3516	3516	2870	2773	3516	4464	4866	4464	3636	OUTPUT 86.3 rpm
586	2870	2870	2735	2961	2961	2870	2773	2984	2962	4866	4464	3636	1725 rpm INPUT
586	2870	2870	2735	3225	3225	2870	2773	3256	3227	4866	4464	3636	
586	2870	2870	2735	3468	3468	2870	2773	3503	3470	4866	4464	3636	25
586	2870	2870	2735	3516	3516	2870	2773	3516	3936	4866	4464	3636	
586	2870	2870	2735	3516	3516	2870	2773	3516	4464	4866	4464	3636	
586	2870	2870	2735	3516	3516	2870	2773	3516	4464	4866	4464	3636	OUTPUT 69.0 rpm
586	2870	2870	2735	3253	3253	2870	2773	3270	3246	4866	4464	3636	1725 rpm INPUT
586	2870	2870	2735	3516	3516	2870	2773	3516	3595	4866	4464	3636	
586	2870	2870	2735	3516	3516	2870	2773	3516	3835	4866	4464	3636	30
586	2870	2870	2735	3516	3516	2870	2773	3516	4261	4866	4464	3636	
586	2870	2870	2735	3516	3516	2870	2773	3516	4464	4866	4464	3636	
586	2870	2870	2735	3516	3516	2870	2773	3516	4464	4866	4464	3636	OUTPUT 57.5 rpm
586	2870	2870	2735	3466	3466	2870	2773	3481	3457	4866	4464	3636	1725 rpm INPUT
586	2870	2870	[illegible]	[illegible]	[illegible]	[illegible]	[illegible]	[illegible]	2846	4866	4464	3636	
586	2870	2870	[illegible]	[illegible]	[illegible]	[illegible]	[illegible]	[illegible]	3105	4866	4464	3636	35
586	2870	2870	2735	[illegible]	[illegible]	2870	2773	[illegible]	4464	4866	4464	3636	
586	2870	2870	[illegible]	[illegible]	[illegible]	[illegible]	[illegible]	[illegible]	4464	4866	4464	3636	
586	2870	2870	2735	3516	3516	2870	2773	3516	4464	4866	4464	3636	OUTPUT 49.3 rpm
586	2870	2870	2735	3516	3516	2870	2773	3516	3601	4866	4464	3636	1725 rpm INPUT
586	2870	2870	2735	3516	3516	2870	2773	3516	3993	4866	4464	3636	
586	2870	2870	2735	3516	3516	2870	2773	3516	4302	4866	4464	3636	40
586	2870	2870	2735	3516	3516	2870	2773	3516	4464	4866	4464	3636	(39)
586	2870	2870	2735	3516	3516	2870	2773	3516	4464	4866	4464	3636	
586	2870	2870	2735	3516	3516	2870	2773	3516	4464	4866	4464	3636	OUTPUT 43.1 rpm
586	2870	2870	2735	3516	3516	2870	2773	3516	3994	4866	4464	3636	1725 rpm INPUT
586	2870	2870	2735	3516	3516	2870	2773	3516	4443	4866	4464	3636	
586	2870	2870	2735	3516	3516	2870	2773	3516	4464	4866	4464	3636	50
586	2870	2870	2735	3516	3516	2870	2773	3516	4464	4866	4464	3636	(51)
586	2870	2870	2735	3516	3516	2870	2773	3516	4464	4866	4464	3636	
586	2870	2870	2735	3516	3516	2870	2773	3516	4464	4866	4464	3636	OUTPUT 34.5 rpm
586	2870	2870	2735	3516	3516	2870	2773	3516	4287	4866	4464	3636	1725 rpm INPUT
586	2870	2870	2735	3516	3516	2870	2773	3516	4464	4866	4464	3636	
586	2870	2870	2735	3516	3516	2870	2773	3516	4464	4866	4464	3636	60
586	2870	2870	2735	3516	3516	2870	2773	3516	4464	4866	4464	3636	(61)
586	2870	2870	2735	3516	3516	2870	2773	3516	4464	4866	4464	3636	
586	2870	2870	2735	3516	3516	2870	2773	3516	4464	4866	4464	3636	OUTPUT 28.8 rpm

NO LONGER AVAILABLE AS STANDARD RATIO

***Overhung load given at one shaft diameter from housing or mounting flange.

‡ O.H.L. based on maximum bore. Use of smaller diameter shaft may limit O.H.L.

† 8.750" from centerline.

5

SINGLE REDUCTION SERIES REDUCER NO. 9

All ratings stated are for A.G.M.A. Class 1 service.

HORSEPOWER AND TORQUE RATINGS

RATIO **		MECHANICAL★				THERMAL★				FAN COOLED – THERMAL★			
	INPUT SPEED RPM	OUTPUT TORQUE IN. LBS.	OUTPUT HP	INPUT HP	OUTPUT TORQUE IN. LBS.	OUTPUT HP	INPUT HP	GRTMR HP 1800 RPM / O/P TQUE	OUTPUT TORQUE In. LBS.	OUTPUT HP	INPUT HP	
1725 rpm INPUT	1800	5264	20.74	22.61	3664	14.43	15.89	15	4211	16.59	18.19	20
7-1/2	1200	6635	17.43	19.12	4618	12.13	13.43		5308	13.94	15.38	
(7-1/4)	900	7820	15.40	17.01	5443	10.72	11.93		6256	12.32	13.67	
	600	9787	12.85	14.34	6811	8.94	10.06		7829	10.28	11.52	4211
	300	11388	7.47	8.58	8951	5.88	6.78	3449	10289	6.76	7.77	
OUTPUT 230 rpm	100	11388	2.49	3.05	10740	2.35	2.88		11380	2.49	3.05	*
1725 rpm INPUT	1800	5923	16.50	18.17	4113	11.46	12.77	10	4748	13.23	14.67	15
10	1200	7466	13.87	15.36	5184	9.63	10.79		5984	11.12	12.39	
(10-1/4)	900	8731	12.16	13.56	6063	8.45	9.51		6999	9.75	10.93	
	600	9862	9.16	10.35	7422	6.89	7.85		8568	7.96	9.02	4748
	300	9862	4.58	5.36	9085	4.22	4.95	3179	9862	4.58	5.36	
OUTPUT 172.5 rpm	100	9862	1.53	1.92	9862	1.53	1.92		9862	1.53	1.92	*
1725 rpm INPUT	1800	6080	11.98	13.96	4189	8.25	9.78	10	4864	9.58	11.27	10
15	1200	7664	10.06	11.87	5280	6.93	8.30		6131	8.05	9.57	
(14-1/2)	900	9032	8.90	10.61	6223	6.13	7.41		7225	7.12	8.55	
	600	11288	7.41	9.01	7777	5.11	6.28		9030	5.93	7.25	
	300	11388	3.74	4.79	10115	3.32	4.27	4189	11388	3.74	4.79	
OUTPUT 115 rpm	100	11388	1.25	1.77	11388	1.25	1.77	*	11388	1.25	1.77	4286
1725 rpm INPUT	1800	6537	9.34	11.01	4454	6.36	7.67	7-1/2	5240	7.48	8.93	10
20	1200	7976	7.59	9.06	5434	5.17	6.30		6393	6.09	7.34	
	900	9648	6.89	8.30	6573	4.69	5.76		7734	5.52	6.72	
	600	9866	4.70	5.81	7951	3.79	4.73		9355	4.45	5.52	
	300	9866	2.35	3.08	9618	2.29	3.01	4347	9903	2.36	3.09	5240
OUTPUT 86.3 rpm	100	9866	0.78	1.15	9866	0.79	1.16		9903	0.79	1.16	*
1725 rpm INPUT	1800	6549	7.48	9.08	4459	5.09	6.35	5	5292	6.05	7.43	7-1/2
25	1200	8096	6.17	7.57	5512	4.20	5.28		6542	4.98	6.19	
	900	9646	5.51	6.84	6567	3.75	4.76		7795	4.45	5.59	
	600	10550	4.02	5.12	7825	2.98	3.86		9287	3.54	4.54	
	300	10550	2.01	2.73	9323	1.78	2.44		10550	2.01	2.73	5292
OUTPUT 69.0 rpm	100	10550	0.67	1.04	10478	0.67	1.03	3426	10550	0.67	1.04	*
1725 rpm INPUT	1800	6291	5.99	8.00	4209	4.01	5.53	5	5033	4.79	6.50	7-1/2
30	1200	7930	5.03	6.87	5305	3.37	4.72		6344	4.03	5.57	
	900	9345	4.45	6.19	6252	2.98	4.24		7476	3.56	5.01	
	600	11388	3.61	5.20	7810	2.48	3.64		9339	2.96	4.31	
	300	11388	1.81	2.84	10130	1.61	2.55		11388	1.81	2.84	5033
OUTPUT 57.5 rpm	100	11388	0.60	1.12	11388	0.61	1.12	3765	11388	0.60	1.12	*
1725 rpm INPUT	1800	6507	4.53	6.18	4266	2.97	4.23	5	5226	3.64	5.07	5
40	1200	7957	3.70	5.14	5217	2.42	3.50		6391	2.97	4.21	
(41)	900	9602	3.34	4.73	6295	2.19	3.21		7713	2.69	3.86	
	600	9909	2.30	3.40	7597	1.76	2.66		9307	2.16	3.21	
	300	9909	1.15	1.87	9168	1.06	1.75	4266	9909	1.15	1.87	5147
OUTPUT 43.1 rpm	100	9909	0.38	0.75	9909	0.38	0.75	*	9909	0.38	0.75	
1725 rpm INPUT	1800	6268	3.58	5.11	4052	2.32	3.49	3	5065	2.89	4.23	5
50	1200	7759	2.96	4.30	5016	1.91	2.92		6270	2.39	3.55	
	900	9228	2.64	3.91	5966	1.70	2.64		7457	2.13	3.22	
	600	9439	1.80	2.80	7095	1.35	2.17		8869	1.69	2.64	
	300	9439	0.90	1.56	8438	0.80	1.41		9439	0.90	1.56	5065
OUTPUT 34.5 rpm	100	9439	0.30	0.63	9439	0.30	0.63	3382	9439	0.30	0.63	*
1725 rpm INPUT	1800	5928	2.82	4.20	3760	1.79	2.86	3	4790	2.28	3.49	3
60	1200	7413	2.35	3.56	4702	1.49	2.40		5990	1.90	2.95	
	900	8636	2.06	3.17	5478	1.30	2.13		6978	1.66	2.62	
	600	8864	1.41	2.29	6382	1.01	1.72		8130	1.29	2.12	
	300	8864	0.70	1.29	7435	0.59	1.11	3760	8864	0.70	1.29	3992
OUTPUT 28.8 rpm	100	8864	0.23	0.53	8232	0.22	0.50	*	8864	0.23	0.53	

**Numbers shown in ( ) are exact ratios

★ *Mechanical ratings indicated above apply to both non-fan cooled and fan cooled units.*

*Motor H.P. exceeds reducer capacity. Output must be limited to torque shown.

Center distance. 5.167". Maximum NEMA motor frame size: 56C thru 256TC flange incl.
Thermal input horsepower must not be exceeded for class 1, 2, or 3 service.

REDUCER NO. 9

***SHAFT OVERHUNG AND THRUST LOADS (includes Fan Cooled and Motorized where applicable)

ALL	CB-CT	CV (VERTICAL SHAFT)				L (DROP BEARING)				S (SHAFT MOUNT)			RATIO
INPUT OHL	OUTPUT OHL	OUTPUT UP OHL	OUTPUT DOWN OHL	OUTPUT THRUST DOWN	OUTPUT THRUST UP	OUTPUT UP OHL	OUTPUT DOWN OHL	OUTPUT THRUST DOWN	OUTPUT THRUST UP	OUTPUT THRUST TO BASE	OUTPUT THRUST FROM BASE	OUTPUT OHL ‡†	
562	2713	2713	2670	2066	2059	4050	3372	2102	2504	5050	4848	3636	1725 rpm INPUT
562	2713	2713	2670	2195	2187	4050	3372	2241	2670	5050	4848	3636	
562	2713	2713	2670	2281	2272	4050	3372	2336	2782	5050	4848	3636	7-1/2
562	2713	2713	2670	2382	2371	4050	3372	2452	2921	5050	4848	3636	(7-1/4)
562	2713	2713	2670	3016	3002	4050	3372	3100	3701	5050	4848	3636	
562	2713	2713	2670	4976	3920	4050	3372	4464	4848	5050	4848	3636	OUTPUT 230 rpm
562	2713	2713	2670	2336	2329	4050	3372	2383	2848	5050	4848	3636	1725 rpm INPUT
562	2713	2713	2670	2491	2482	4050	3372	2551	3050	5050	4848	3636	
562	2713	2713	2670	2607	2598	4050	3372	2679	3204	5050	4848	3636	10
562	2713	2713	2670	2920	2908	4050	3372	3002	3594	5050	4848	3636	(10-1/4)
562	2713	2713	2670	3970	3920	4050	3372	4056	4848	5050	4848	3636	
562	2713	2713	2670	5689	3920	4050	3372	4464	4848	5050	4848	3636	OUTPUT 172.5 rpm
562	2713	2713	2670	2929	2923	4050	3372	2953	3466	5050	4848	3636	1725 rpm INPUT
562	2713	2713	2670	3194	3185	4050	3372	3223	3775	5050	4848	3636	
562	2713	2713	2670	3382	3372	4050	3372	3417	3994	5050	4848	3636	15
562	2713	2713	2670	3652	3640	4050	3372	3697	4310	5050	4848	3636	(14-1/2)
562	2713	2713	2670	4813	3920	4050	3372	4464	4848	5050	4848	3636	
562	2713	2713	2670	5689	3920	4050	3372	4464	4848	5050	4848	3636	OUTPUT 115 rpm
562	2713	2713	2670	3288	3281	4050	3372	3315	3907	5050	4848	3636	1725 rpm INPUT
562	2713	2713	2670	3629	3621	4050	3372	3663	4312	5050	4848	3636	
562	2713	2713	2670	3823	3814	4050	3372	3864	4541	5050	4848	3636	20
562	2713	2713	2670	4440	3920	4050	3372	4464	4848	5050	4848	3636	
562	2713	2713	2670	5689	3920	4050	3372	4464	4848	5050	4848	3636	
562	2713	2713	2670	5689	3920	4050	3372	4464	4848	5050	4848	3636	OUTPUT 86.3 rpm
562	2713	2713	2670	3631	3625	4050	3372	3656	4312	5050	4848	3636	1725 rpm INPUT
562	2713	2713	2670	4010	3920	4050	3372	4041	4760	5050	4848	3636	
562	2713	2713	2670	4270	3920	4050	3372	4307	4848	5050	4848	3636	25
562	2713	2713	2670	4843	3920	4050	3372	4464	4848	5050	4848	3636	
562	2713	2713	2670	5689	3920	4050	3372	4464	4848	5050	4848	3636	
562	2713	2713	2670	5689	3920	4050	3372	4464	4848	5050	4848	3636	OUTPUT 69.0 rpm
562	2713	2713	2670	3994	3920	4050	3372	4012	4704	5050	4848	3636	1725 rpm INPUT
562	2713	2713	2670	4413	3920	4050	3372	4436	4848	5050	4848	3636	
562	2713	2713	2670	4730	3920	4050	3372	4464	4848	5050	4848	3636	30
562	2713	2713	2670	5239	3920	4050	3372	4464	4848	5050	4848	3636	
562	2713	2713	2670	5689	3920	4050	3372	4464	4848	5050	4848	3636	
562	2713	2713	2670	5689	3920	4050	3372	4464	4848	5050	4848	3636	OUTPUT 57.5 rpm
562	2713	2713	2670	4464	3920	4050	3372	4464	4848	5050	4848	3636	1725 rpm INPUT
562	2713	2713	2670	4975	3920	4050	3372	4464	4848	5050	4848	3636	
562	2713	2713	2670	5321	3920	4050	3372	4464	4848	5050	4848	3636	40
562	2713	2713	2670	5689	3920	4050	3372	4464	4848	5050	4848	3636	(41)
562	2713	2713	2670	5689	3920	4050	3372	4464	4848	5050	4848	3636	
562	2713	2713	2670	5689	3920	4050	3372	4464	4848	5050	4848	3636	OUTPUT 43.1 rpm
562	2713	2713	2670	4827	3920	4050	3372	4464	4848	5050	4848	3636	1725 rpm INPUT
562	2713	2713	2670	5379	3920	4050	3372	4464	4848	5050	4848	3636	
562	2713	2713	2670	5689	3920	4050	3372	4464	4848	5050	4848	3636	50
562	2713	2713	2670	5689	3920	4050	3372	4464	4848	5050	4848	3636	
562	2713	2713	2670	5689	3920	4050	3372	4464	4848	5050	4848	3636	
562	2713	2713	2670	5689	3920	4050	3372	4464	4848	5050	4848	3636	OUTPUT 34.5 rpm
562	2713	2713	2670	5181	3920	4050	3372	4464	4848	5050	4848	3636	1725 rpm INPUT
562	2713	2713	2670	5689	3920	4050	3372	4464	4848	5050	4848	3636	
562	2713	2713	2670	5689	3920	4050	3372	4464	4848	5050	4848	3636	60
562	2713	2713	2670	5689	3920	4050	3372	4464	4848	5050	4848	3636	
562	2713	2713	2670	5689	3920	4050	3372	4464	4848	5050	4848	3636	
562	2713	2713	2670	5689	3920	4050	3372	4464	4848	5050	4848	3636	OUTPUT 28.8 rpm

***Overhung load given at one shaft diameter from housing or mounting flange.

‡ O.H.L. based on maximum bore. Use of smaller diameter shaft may limit O.H.L.

† 10.438" from centerline.

5

SINGLE REDUCTION SERIES REDUCER NO. 10

All ratings stated are for A.G.M.A. Class 1 service.

HORSEPOWER AND TORQUE RATINGS

RATIO **		MECHANICAL★				THERMAL★				FAN COOLED — THERMAL★			
	INPUT SPEED RPM	OUTPUT TORQUE IN LBS	OUTPUT HP	INPUT HP	OUTPUT TORQUE IN LBS	OUTPUT HP	INPUT HP	GRTMR HP 1800 RPM / O/P TQUE	OUTPUT TORQUE In. LBS	OUTPUT HP	INPUT HP	
1725 rpm INPUT	1800	7402	28.19	30.49	5276	20.09	21.92	20	6462	24.61	26.70	25
	1200	9331	23.69	25.77	6650	16.88	18.50		8145	20.68	22.56	
7-1/2	900	10997	20.94	22.90	7837	14.92	16.44		9599	18.28	20.04	
	600	13768	17.48	19.30	9812	12.46	13.84		12018	15.26	16.89	
	300	18202	11.55	13.06	12972	8.23	9.37	4798	15888	10.08	11.43	6038
OUTPUT 230 rpm	100	18371	3.89	4.65	15625	3.31	3.98		18371	3.89	4.65	
1725 rpm INPUT	1800	7881	21.96	23.94	5689	15.85	17.47	15	6567	18.30	20.06	20
	1200	9934	18.45	20.23	7171	13.32	14.74		9278	15.38	16.94	
10	900	11590	16.15	17.80	8367	11.66	12.96		9658	13.46	14.90	
(10-1/4)	600	14326	13.31	14.81	10342	9.61	10.78		11939	11.09	12.39	
	300	17709	8.22	9.39	12784	5.94	6.84		14757	6.85	7.86	
OUTPUT 172.5 rpm	100	18794	2.91	3.53	14724	2.28	2.79	4852	16997	2.63	3.21	6544
1725 rpm INPUT	1800	8427	15.53	18.16	5869	10.81	12.85	10	6824	12.57	14.83	15
	1200	10623	13.05	15.46	7397	9.09	10.91		8602	10.57	12.61	
15	900	12519	11.53	13.82	8718	8.03	9.74		10137	9.34	11.26	
(15-1/2)	600	15655	9.62	11.75	10901	6.70	8.27		12676	7.79	9.57	
	300	21263	6.53	8.34	14806	4.55	5.87		17217	5.29	6.80	6824
OUTPUT 115 rpm	100	24155	2.47	3.49	18159	1.86	2.65	4497	21115	2.16	3.07	*
1725 rpm INPUT	1800	8645	12.04	13.94	6156	8.58	10.12	10	7242	10.09	11.79	10
	1200	10664	9.90	11.57	7593	7.05	8.38		8933	8.30	9.77	
20	900	12743	8.88	10.45	9073	6.32	7.55		10675	7.44	8.82	
(20-1/2)	600	15227	7.07	8.47	10842	5.04	6.12		12756	5.92	7.14	
	300	17587	4.08	5.11	12956	3.01	3.82		15242	3.54	4.56	
OUTPUT 86.3 rpm	100	17587	1.36	1.88	14589	1.13	1.58	6078	17164	1.33	1.84	6078
1725 rpm INPUT	1800	8655	9.89	12.49	5895	6.74	8.72	7-1/2	7008	8.01	10.24	10
	1200	10910	8.31	10.69	7431	5.66	7.43		8834	6.73	8.74	
25	900	12857	7.34	9.60	8758	5.00	6.66		10411	5.95	7.85	
	600	16082	6.12	8.23	10955	4.17	5.70		13022	4.96	6.72	
	300	21790	4.15	5.93	14843	2.83	4.11		17644	3.36	4.84	
OUTPUT 69.0 rpm	100	24155	1.53	2.51	18174	1.15	1.92	5004	21604	1.37	2.26	6831
1725 rpm INPUT	1800	8832	8.41	10.38	6178	5.88	7.46	7-1/2	7399	7.04	8.80	10
	1200	11133	7.07	8.83	7788	4.94	6.32		9326	5.92	7.47	
30	900	13031	6.20	7.84	9115	4.34	5.61		10916	5.20	6.64	
	600	15851	5.03	6.51	11088	3.52	4.64		13279	4.21	5.50	
	300	19212	3.05	4.18	13487	2.14	3.00	6178	16152	2.56	3.55	7399
OUTPUT 57.5 rpm	100	19212	1.02	1.59	15369	0.81	1.30	*	18405	0.97	1.53	*
1725 rpm INPUT	1800	8748	6.25	8.20	5991	4.28	5.83	5	7328	5.23	6.98	7-1/2
	1200	11027	5.25	7.00	7552	3.60	4.94		9237	4.40	5.94	
40	900	12907	4.61	6.24	8839	3.16	4.39		10812	3.86	5.29	
	600	15706	3.74	5.20	10756	2.56	3.66		13157	3.13	4.41	
	300	17000	2.02	3.05	13089	1.56	2.40		16011	1.91	2.88	7328
OUTPUT 43.1 rpm	100	17000	0.67	1.19	14920	0.59	1.06	5035	17000	0.67	1.19	*
1725 rpm INPUT	1800	8424	4.81	6.67	5655	3.23	4.69	5	7057	4.03	5.70	5
	1200	10302	3.92	5.54	6915	2.63	3.88		8630	3.29	4.72	
50	900	12432	3.55	5.09	8344	2.38	3.54		10414	2.97	4.33	
	600	15000	2.86	4.23	10069	1.92	2.94		12567	2.39	3.59	
	300	15000	1.43	2.33	12151	1.16	1.93	5655	15000	1.43	2.33	6081
OUTPUT 34.5 rpm	100	15000	0.48	0.94	13773	0.44	0.87	*	15000	0.48	0.94	
1725 rpm INPUT	1800	7966	3.79	5.51	5239	2.49	3.85	3	6673	3.18	4.72	5
	1200	9861	3.13	4.63	6485	2.06	3.21		8261	2.62	3.95	
60	900	11728	2.79	4.19	7712	1.84	2.89		9824	2.34	3.58	
	600	13948	2.21	3.44	9172	1.46	2.37		11685	1.85	2.93	
	300	14200	1.13	1.95	10909	0.87	1.55		13897	1.10	1.91	6673
OUTPUT 28.8 rpm	100	14200	0.38	0.80	12246	0.32	0.70	3847	14200	0.38	0.80	*

***Numbers shown in ( ) are exact ratios*

★ *Mechanical ratings indicated above apply to both non-fan cooled and fan cooled units.*

**Motor H.P. exceeds reducer capacity. Output must be limited to torque shown.*

Center distance 6.000".

Thermal input horsepower must not be exceeded for class 1, 2, or 3 service.

REDUCER NO. **10**

***SHAFT OVERHUNG AND THRUST LOADS (includes Fan Cooled and Motorized where applicable)

ALL	CB-CT	CV (VERTICAL SHAFT)				L (DROP BEARING)				S (SHAFT MOUNT)			RATIO
INPUT OHL	OUTPUT OHL	OUTPUT UP OHL	OUTPUT DOWN OHL	OUTPUT THRUST DOWN	OUTPUT THRUST UP	OUTPUT UP OHL	OUTPUT DOWN OHL	OUTPUT THRUST DOWN	OUTPUT THRUST UP	OUTPUT THRUST TO BASE	OUTPUT THRUST FROM BASE	OUTPUT OHL ‡†	
788	5607	5607	5438	2954	2945	5222	5767	3023	2976	6100	6100	5436	1725 rpm INPUT
803	5607	5607	5438	3153	3142	5222	5767	3241	3181	6100	6100	5436	
803	5607	5607	5438	3268	3254	5222	5767	3372	3302	6100	6100	5436	7-1/2
803	5607	5607	5438	3435	3418	5222	5767	3566	3477	6100	6100	5436	
803	5607	5607	5438	3918	3895	5222	5767	4099	3982	6100	6100	5436	
803	5607	5607	5438	6250	3920	5222	5767	6250	5952	6100	6100	5436	OUTPUT 230 rpm
788	5607	5607	5438	3366	3357	5222	5767	3451	3406	6100	6100	5436	1725 rpm INPUT
803	5607	5607	5438	3603	3592	5222	5767	3712	3655	6100	6100	5436	
803	5607	5607	5438	3791	3778	5222	5767	3918	3852	6100	6100	5436	10
803	5607	5607	5438	4040	3920	5222	5767	4199	4117	6100	6100	5436	(10-1/4)
803	5607	5607	5438	4912	3920	5222	5767	5116	5013	6100	6100	5436	
803	5607	5607	5438	6250	3920	5222	5767	6250	5952	6100	6100	5436	OUTPUT 172.5 rpm
788	5607	5607	5438	4311	3920	5222	5767	4344	4293	6100	6100	5436	1725 rpm INPUT
803	5607	5607	5438	4719	3920	5222	5767	4760	4696	6100	6100	5436	
803	5607	5607	5438	5014	3920	5222	5767	5064	4988	6100	6100	5436	15
803	5607	5607	5438	5454	3920	5222	5767	5517	5422	6100	6100	5436	(15-1/2)
803	5607	5607	5438	6250	3920	5222	5767	6250	5952	6100	6100	5436	
803	5607	5607	5438	6250	3920	5222	5767	6250	5952	6100	6100	5436	OUTPUT 115 rpm
788	5607	5607	5438	4728	3920	5222	5767	4777	4731	6100	6100	5436	1725 rpm INPUT
803	5607	5607	5438	5219	3920	5222	5767	5279	5223	6100	6100	5436	
803	5607	5607	5438	5530	3920	5222	5767	5603	5536	6100	6100	5436	20
803	5607	5607	5438	6121	3920	5222	5767	6210	5952	6100	6100	5436	(20-1/2)
803	5607	5607	5438	6250	3920	5222	5767	6250	5952	6100	6100	5436	
803	5607	5607	5438	6250	3920	5222	5767	6250	5952	6100	6100	5436	OUTPUT 86.3 rpm
788	5607	5607	5438	5246	3920	5222	5767	5274	5222	6100	6100	5436	1725 rpm INPUT
803	5607	5607	5438	5790	3920	5222	5767	5825	5759	6100	6100	5436	
803	5607	5607	5438	6195	3920	5222	5767	6237	5952	6100	6100	5436	25
803	5607	5607	5438	6250	3920	5222	5767	6250	5952	6100	6100	5436	
803	5607	5607	5438	6250	3920	5222	5767	6250	5952	6100	6100	5436	
803	5607	5607	5438	6250	3920	5222	5767	6250	5952	6100	6100	5436	OUTPUT 69.0 rpm
803	5607	5607	5438	5594	3920	5222	5767	5626	5579	6100	6100	5436	1725 rpm INPUT
803	5607	5607	5438	6180	3920	5222	5767	6222	5952	6100	6100	5436	
803	5607	5607	5438	6250	3920	5222	5767	6250	5952	6100	6100	5436	30
803	5607	5607	5438	6250	3920	5222	5767	6250	5952	6100	6100	5436	
803	5607	5607	5438	6250	3920	5222	5767	6250	5952	6100	6100	5436	
803	5607	5607	5438	6250	3920	5222	5767	6250	5952	6100	6100	5436	OUTPUT 57.5 rpm
803	5607	5607	5438	6250	3920	5222	5767	6250	5952	6100	6100	5436	1725 rpm INPUT
803	5607	5607	5438	6250	3920	5222	5767	6250	5952	6100	6100	5436	
803	5607	5607	5438	6250	3920	5222	5767	6250	5952	6100	6100	5436	40
803	5607	5607	5438	6250	3920	5222	5767	6250	5952	6100	6100	5436	
803	5607	5607	5438	6250	3920	5222	5767	6250	5952	6100	6100	5436	
803	5607	5607	5438	6250	3920	5222	5767	6250	5952	6100	6100	5436	OUTPUT 43.1 rpm
803	5607	5607	5438	6250	3920	5222	5767	6250	5952	6100	6100	5436	1725 rpm INPUT
803	5607	5607	5438	6250	3920	5222	5767	6250	5952	6100	6100	5436	
803	5607	5607	5438	6250	3920	5222	5767	6250	5952	6100	6100	5436	50
803	5607	5607	5438	6250	3920	5222	5767	6250	5952	6100	6100	5436	
803	5607	5607	5438	6250	3920	5222	5767	6250	5952	6100	6100	5436	
803	5607	5607	5438	6250	3920	5222	5767	6250	5952	6100	6100	5436	OUTPUT 34.5 rpm
803	5607	5607	5438	6250	3920	5222	5767	6250	5952	6100	6100	5436	1725 rpm INPUT
803	5607	5607	5438	6250	3920	5222	5767	6250	5952	6100	6100	5436	
803	5607	5607	5438	6250	3920	5222	5767	6250	5952	6100	6100	5436	60
803	5607	5607	5438	6250	3920	5222	5767	6250	5952	6100	6100	5436	
803	5607	5607	5438	6250	3920	5222	5767	6250	5952	6100	6100	5436	
803	5607	5607	5438	6250	3920	5222	5767	6250	5952	6100	6100	5436	OUTPUT 28.8 rpm

****Overhung load given at one shaft diameter from housing or mounting flange.*

‡ O.H.L. based on maximum bore. Use of smaller diameter shaft may limit O.H.L.

† 11.438" from centerline

5

SINGLE REDUCTION SERIES REDUCER NO. 11

All ratings stated are for A.G.M.A. Class 1 service.

HORSEPOWER AND TORQUE RATINGS

RATIO **	INPUT SPEED RPM	MECHANICAL★ OUTPUT TORQUE IN. LBS	MECHANICAL★ OUTPUT HP	MECHANICAL★ INPUT HP	THERMAL★ OUTPUT TORQUE IN. LBS	THERMAL★ OUTPUT HP	THERMAL★ INPUT HP	GRTMR HP 1800 RPM / O/P TQUE	FAN COOLED – THERMAL★ OUTPUT TORQUE In. LBS	FAN COOLED – THERMAL★ OUTPUT HP	FAN COOLED – THERMAL★ INPUT HP	
1725 rpm INPUT	1800	8572	33.77	36.49	6201	24.43	26.62	25	7107	28.00	30.39	30
7-1/2	1200	10806	28.38	30.84	7816	20.53	22.47		8958	23.53	25.67	
(7-1/4)	900	12735	25.08	27.40	9211	18.14	19.96		10557	20.79	22.80	
	600	15872	20.84	22.99	11481	1508	16.74		13158	17.28	19.13	
	300	21936	14.40	16.24	15867	10.42	11.82		18186	11.94	13.51	
OUTPUT 230 rpm	100	27218	5.96	7.08	19687	4.31	5.16	5810	22564	4.94	5.89	7010
1725 rpm INPUT	1800	9403	26.85	29.42	6833	19.52	21.60	20	7877	22.50	24.78	25
10	1200	11852	22.57	24.88	8613	16.40	18.24		9928	18.90	20.94	
	900	13968	19.95	22.12	10151	14.50	16.21		11701	16.71	18.61	
	600	17481	16.42	18.66	12704	12.09	13.67		14644	13.94	15.70	
	300	20200	9.62	11.10	16695	7.95	9.22		19245	9.16	10.59	7877
OUTPUT 172.5 rpm	100	20200	3.21	3.96	18878	3.00	3.71	6304	20200	3.21	3.96	*
1725 rpm INPUT	1800	10000	19.70	22.56	7130	14.04	16.32	15	8291	16.33	18.84	20
15	1200	12606	16.55	19.15	8987	11.80	13.83		10450	13.72	15.98	
(14-1/2)	900	14856	14.63	17.09	10592	10.43	12.33		12316	12.13	14.25	
	600	18572	12.19	14.48	13241	8.69	10.44		15397	10.11	12.07	
	300	25267	8.29	10.23	18014	5.91	7.37		20946	6.88	8.53	8291
OUTPUT 115 rpm	100	28409	3.11	4.19	22117	2.42	3.30	6522	25718	2.81	3.81	*
1725 rpm INPUT	1800	10373	14.81	17.44	7386	10.55	12.65	15	8690	12.41	14.74	15
20	1200	13076	12.45	14.82	9310	8.86	10.73		10953	10.43	12.51	
	900	15410	11.00	13.24	10973	7.83	9.57		12909	9.22	11.17	
	600	19260	9.17	11.24	13714	6.53	8.12		16134	7.68	9.48	
	300	20200	4.81	6.22	17835	4.25	5.52	7386	20200	4.81	6.22	8690
OUTPUT 86.3 rpm	100	20200	1.60	2.32	20200	1.60	2.32	*	20200	1.60	2.32	*
1725 rpm INPUT	1800	10488	11.75	14.11	7419	8.31	10.22	10	8832	9.89	12.01	15
25	1200	13221	9.87	11.99	9352	6.98	8.66		11133	8.31	10.19	
(25-1/2)	900	15389	8.62	10.59	10886	6.10	7.63		12959	7.26	8.99	
	600	17464	6.52	8.20	13547	5.06	6.45		16128	6.02	7.60	
	300	17464	3.26	4.37	16860	3.15	4.22		17464	3.26	4.37	8832
OUTPUT 69 rpm	100	17464	1.09	1.66	17464	1.09	1.66	7243	17464	1.09	1.66	*
1725 rpm INPUT	1800	10482	9.98	12.61	7332	6.98	9.06	10	8780	8.36	10.69	10
30	1200	13212	8.39	10.76	9242	5.86	7.70		11068	7.02	9.11	
	900	15571	7.41	9.65	10892	5.18	6.89		13044	6.21	8.16	
	600	19454	6.17	8.24	13608	4.32	5.88		16296	5.17	6.97	
	300	25250	4.01	5.68	17662	2.80	4.06	7332	21152	3.36	4.80	
OUTPUT 57.5 rpm	100	25384	1.34	2.20	21015	1.11	1.85	*	25168	1.33	2.18	8164
1725 rpm INPUT	1800	10370	7.41	10.00	7102	5.07	7.10	7-1/2	8687	6.20	8.51	10
40	1200	13072	6.22	8.57	8952	4.25	6.05		10950	5.21	7.27	
	900	15406	5.50	7.71	10550	3.77	5.43		12905	4.61	6.54	
	600	19245	4.58	6.62	13179	3.14	4.66		16121	3.84	5.61	
	300	20200	2.40	3.80	17094	2.03	3.25	7102	20200	2.40	3.80	8687
OUTPUT 43.1 rpm	100	20200	0.80	1.51	20200	0.80	1.51	*	20200	0.80	1.51	*
1725 rpm INPUT	1800	10080	5.65	7.93	6734	3.77	5.56	5	8417	4.71	6.75	7-1/2
50	1200	12706	4.74	6.78	8488	3.17	4.73		10610	3.96	5.76	
(51)	900	14801	4.14	6.03	9888	2.76	4.19		12360	3.46	5.12	
	600	17464	3.26	4.92	12280	2.29	3.58		15350	2.87	4.37	
	300	17464	1.63	2.72	15251	1.42	2.41		17464	1.63	2.72	8417
OUTPUT 34.5 rpm	100	17464	0.54	1.11	17464	0.54	1.11	5935	17464	0.54	1.11	*
1725 rpm INPUT	1800	9397	4.47	6.54	6278	2.99	4.63	5	7998	3.81	5.68	5
60	1200	11846	3.76	5.58	7914	2.51	3.93		10081	3.20	4.84	
	900	13865	3.30	4.99	9263	2.20	3.50		11800	2.81	4.32	
	600	14799	3.13	4.78	11264	1.79	2.93		14350	2.28	3.62	
	300	16389	1.30	2.28	13698	1.09	1.95	6278	16388	1.30	2.28	6872
OUTPUT 28.8 rpm	100	16389	0.43	0.94	15606	0.41	0.90	*	16388	0.43	0.94	

***Numbers shown in ( ) are exact ratios*

★ *Mechanical ratings indicated above apply to both non-fan cooled and fan cooled units.*

**Motor H.P. exceeds reducer capacity. Output must be limited to torque shown.*

Center distance 6.500".

Thermal input horsepower must not be exceeded for class 1, 2, or 3 service.

REDUCER NO. **11**

***SHAFT OVERHUNG AND THRUST LOADS (includes Fan Cooled and Motorized where applicable)

ALL	CB-CT	CV (VERTICAL SHAFT)				L (DROP BEARING)				S (SHAFT MOUNT)			
INPUT OHL	OUTPUT OHL	OUTPUT UP OHL	OUTPUT DOWN OHL	OUTPUT THRUST DOWN	OUTPUT THRUST UP	OUTPUT UP OHL	OUTPUT DOWN OHL	OUTPUT THRUST DOWN	OUTPUT THRUST UP	OUTPUT THRUST TO BASE	OUTPUT THRUST FROM BASE	OUTPUT OHL ‡ †	RATIO
792	7232	7232	7124	2889	2874								1725 rpm INPUT
805	7232	7232	7124	3066	3045								7-1/2
805	7232	7232	7124	3183	3160								(7-1/4)
805	7232	7232	7124	3330	3301								
805	7232	7232	7124	3649	3608								
805	7232	7232	7124	5462	3960								OUTPUT 230 rpm
792	7232	7232	7124	3329	3313								1725 rpm INPUT
805	7232	7232	7124	3574	3554								
805	7232	7232	7124	3726	3702								10
805	7232	7232	7124	3933	3902								
805	7232	7232	7124	5002	3960								
805	7232	7232	7124	6580	3960								OUTPUT 172.5 rpm
792	7232	7232	7124	4094	3960								1725 rpm INPUT
805	7232	7232	7124	4458	3960								
805	7232	7232	7124	4724	3960								15
805	7232	7232	7124	5097	3960								(14-1/2)
805	7232	7232	7124	5933	3960								
805	7232	7232	7124	6580	3960								OUTPUT 115 rpm
805	7232	7232	7124	4678	3960								1725 rpm INPUT
805	7232	7232	7124	5124	3960								
805	7232	7232	7124	5448	3960								20
805	7232	7232	7124	5933	3960								
805	7232	7232	7124	6580	3960								
805	7232	7232	7124	6580	3960								OUTPUT 86.3 rpm
805	7232	7232	7124	5135	3960								1725 rpm INPUT
805	7232	7232	7124	5642	3960								
805	7232	7232	7124	6036	3960								25
805	7232	7232	7124	6580	3960								(25-1/2)
805	7232	7232	7124	6580	3960								
805	7232	7232	7124	6580	3960								OUTPUT 69 rpm
805	7232	7232	7124	5547	3960								1725 rpm INPUT
805	7232	7232	7124	6122	3960								
805	7232	7232	7124	6551	3960								30
805	7232	7232	7124	6580	3960								
805	7232	7232	7124	6580	3960								
805	7232	7232	7124	6580	3960								OUTPUT 57.5 rpm
805	7232	7232	7124	6214	3960								1725 rpm INPUT
805	7232	7232	7124	6580	3960								
805	7232	7232	7124	6580	3960								40
805	7232	7232	7124	6580	3960								
805	7232	7232	7124	6580	3960								
805	7232	7232	7124	6580	3960								OUTPUT 43.1 rpm
805	7232	7232	7124	6580	3960								1725 rpm INPUT
805	7232	7232	7124	6580	3960								
805	7232	7232	7124	6580	3960								50
805	7232	7232	7124	6580	3960								(51)
805	7232	7232	7124	6580	3960								
805	7232	7232	7124	6580	3960								OUTPUT 34.5 rpm
805	7232	7232	7124	6580	3960								1725 rpm INPUT
805	7232	7232	7124	6580	3960								
805	7232	7232	7124	6580	3960								60
805	7232	7232	7124	6580	3960								
805	7232	7232	7124	6580	3960								
805	7232	7232	7124	6580	3960								OUTPUT 28.8 rpm

***Overhung load given at one shaft diameter from housing or mounting flange.

‡ O.H.L. based on maximum bore. Use of smaller diameter shaft may limit O.H.L.

5

SINGLE REDUCTION SERIES REDUCER NO. 12

All ratings stated are for A.G.M.A. Class 1 service.

HORSEPOWER AND TORQUE RATINGS

RATIO **		MECHANICAL★				THERMAL★				FAN COOLED – THERMAL★			
	INPUT SPEED RPM	OUTPUT TORQUE IN. LBS	OUTPUT HP	INPUT HP	OUTPUT TORQUE IN. LBS	OUTPUT HP	INPUT HP	GRTMR HP 1800 RPM / O/P TQUE	OUTPUT TORQUE In. LBS	OUTPUT HP	INPUT HP	
1725 rpm INPUT	1800	10233	37.71	40.76	7508	27.67	30.16	30	8617	31.76	34.47	40
7-1/2	1200	12899	31.69	34.45	9464	23.25	25.48		10862	26.69	29.13	
(7-3/4)	900	15202	28.01	30.61	11153	20.55	22.62		12801	23.59	25.87	
	600	18947	23.27	25.67	13901	17.08	18.96		15955	19.60	21.69	
	300	26186	16.08	18.12	19212	11.80	13.39	7463	22051	13.54	15.31	8617
OUTPUT 230 rpm	100	28584	5.85	6.96	23838	4.88	5.83		27360	5.60	6.67	*
1725 rpm INPUT	1800	11052	30.55	33.66	8062	22.28	24.81	25	9307	25.72	28.50	30
10	1200	13931	25.67	28.50	10162	18.73	20.99		11732	21.62	24.12	
(10-1/3)	900	16418	22.69	25.35	11977	16.55	18.66		13826	19.11	21.44	
	600	20503	18.89	21.35	14956	13.78	15.70	8062	17265	15.91	18.05	9307
	300	28079	12.94	15.01	20483	9.44	11.04		23646	10.89	12.69	
OUTPUT 172.5 rpm	100	28584	4.39	5.45	25261	3.88	4.84	*	28584	4.39	5.45	*
1725 rpm INPUT	1800	11695	22.77	25.67	8606	16.76	19.15	20	10007	19.49	22.11	25
15	1200	14742	19.14	21.76	10848	14.08	16.21		12614	16.37	18.73	
(14-2/3)	900	17374	16.92	19.37	12784	12.45	14.42		14865	14.47	16.67	
	600	21729	14.10	16.37	15989	10.38	12.18		18592	12.07	14.08	
	300	23350	7.58	9.15	20885	6.78	8.22	8606	23350	7.58	9.15	10007
OUTPUT 115 rpm	100	23350	2.53	3.32	23350	2.53	3.32	*	23350	2.53	3.32	*
1725 rpm INPUT	1800	12091	16.84	20.04	8654	12.06	14.62	15	10181	14.19	17.03	15
20	1200	15240	14.16	17.07	10909	10.13	12.43		12834	11.92	14.49	
(20-1/2)	900	17961	12.51	15.26	12856	8.96	11.10		15125	10.54	12.95	
	600	22461	10.43	12.97	16077	7.47	9.43		18915	8.78	11.00	
	300	26521	6.16	8.06	21821	5.07	6.69	8654	25672	5.96	7.81	
OUTPUT 86.3 rpm	100	26521	2.05	3.02	26521	2.05	3.02	*	26521	2.05	3.02	8889
1725 rpm INPUT	1800	11693	13.36	15.76	8566	9.79	11.81	10	10167	11.62	13.83	15
25	1200	14364	10.94	13.05	10523	8.02	9.76		12491	9.51	11.44	
	900	17248	9.85	11.83	12636	7.22	8.83		14998	8.57	10.37	
	600	20710	7.89	9.63	15173	5.78	7.19		18009	6.86	8.44	
	300	23350	4.45	5.70	18218	3.47	4.52		21624	4.12	5.31	10167
OUTPUT 69.0 rpm	100	23350	1.48	2.12	20582	1.31	1.89	7133	23350	1.48	2.12	*
1725 rpm INPUT	1800	12148	11.57	14.75	8560	8.15	10.69	10	10251	9.76	12.60	15
30	1200	15312	9.72	12.63	10790	6.85	9.12		12922	8.20	10.77	
	900	18046	8.59	11.33	12716	6.05	8.16		15229	7.25	9.65	
	600	22572	7.16	8.70	15905	5.05	6.98		19048	6.05	8.26	
	300	28584	4.54	6.54	21551	3.42	5.02		25809	4.10	5.94	10251
OUTPUT 57.5 rpm	100	28584	1.51	2.53	26388	1.40	2.35	7953	28584	1.51	2.53	*
1725 rpm INPUT	1800	12200	8.71	11.59	8430	6.02	8.31	7-1/2	10328	7.37	9.96	10
40	1200	15378	7.32	9.92	10626	5.06	7.09		13018	6.20	8.51	
	900	17614	6.29	8.67	12171	4.35	6.18		14911	5.32	7.44	
	600	22572	5.37	7.61	15598	3.71	5.41		19109	4.55	6.52	
	300	28584	3.40	5.17	19989	2.38	3.72		24489	2.91	4.48	10328
OUTPUT 43.1 rpm	100	28584	1.13	2.03	23584	0.94	1.71	7500	28584	1.13	2.03	*
1725 rpm INPUT	1800	11558	6.47	9.55	7774	4.35	6.74	7-1/2	9733	5.45	8.19	7-1/2
50	1200	14569	5.44	8.23	9800	3.66	5.78		12269	4.58	7.05	
(51)	900	17170	4.81	7.43	11549	3.23	5.20		14459	4.05	6.36	
	600	20739	3.87	6.23	14447	2.70	4.49		18087	3.38	5.50	
	300	20739	1.94	3.48	19558	1.83	3.30	7774	20739	1.94	3.48	
OUTPUT 34.5 rpm	100	20739	0.65	1.43	20739	0.65	1.43	*	20739	0.65	1.43	8796
1725 rpm INPUT	1800	10970	5.22	7.50	7325	3.49	5.33	5	9346	4.45	6.54	7-1/2
60	1200	13415	4.26	6.24	8958	2.84	4.42		11429	3.63	5.43	
	900	15754	3.75	5.58	10810	2.57	4.02		13792	3.28	4.96	
	600	15754	2.50	3.92	13044	2.07	3.33		15754	2.50	3.92	
	300	15754	1.25	2.19	15741	1.25	2.19		15754	1.25	2.19	9346
OUTPUT 28.8 rpm	100	15754	0.42	0.90	15754	0.42	0.90	6760	15754	0.42	0.90	*

**Numbers shown in ( ) are exact ratios.

★ *Mechanical ratings indicated above apply to both non-fan cooled and fan cooled units.*

Motor H.P. exceeds reducer capacity. Output must be limited to torque shown.

Center distance 7.000".

Thermal input horsepower must not be exceeded for class 1, 2, or 3 service.

REDUCER NO **12**

***SHAFT OVERHUNG AND THRUST LOADS (includes Fan Cooled and Motorized where applicable)

ALL	CB-CT	CV (VERTICAL SHAFT)				L (DROP BEARING)				S (SHAFT MOUNT)			
INPUT OHL	OUTPUT OHL	OUTPUT UP OHL	OUTPUT DOWN OHL	OUTPUT THRUST DOWN	OUTPUT THRUST UP	OUTPUT UP OHL	OUTPUT DOWN OHL	OUTPUT THRUST DOWN	OUTPUT THRUST UP	OUTPUT THRUST TO BASE	OUTPUT THRUST FROM BASE	OUTPUT OHL ‡ †	RATIO
1127	5600	5600	5490	2653	2637	5600	5600	3687	2654	7000	7000	9900	1725 rpm INPUT
1187	5600	5600	5490	2781	2761	5600	5600	3948	2784	7000	7000	9900	
1126	5600	5600	5490	2860	2836	5600	5600	4130	2863	7000	7000	9900	7-1/2
1227	5600	5600	5490	2942	2912	5600	5600	4375	2946	7000	7000	9900	(7-3/4)
1267	5600	5600	5490	3132	3090	5600	5600	4895	3141	7000	7000	9900	
1267	5600	5600	5490	5401	5354	5600	5600	6636	5421	7000	7000	9900	OUTPUT 230 rpm
1225	5600	5600	5490	3137	3121	5600	5600	4542	3126	7000	7000	9900	1725 rpm INPUT
1225	5600	5600	5490	3345	3325	5600	5600	4601	3332	7000	7000	9900	
1225	5600	5600	5490	3486	3462	5600	5600	4852	3470	7000	7000	9900	10
1225	5600	5600	5490	3665	3636	5600	5600	5204	3647	7000	7000	9900	(10-1/3)
1267	5600	5600	5490	4073	4033	5600	5600	5963	4052	7000	7000	9900	
1267	5600	5600	5490	6636	5500	5600	5600	6636	5500	7000	7000	9900	OUTPUT 172.5 rpm
1225	5600	5600	5490	3726	3711	5600	5600	4967	3714	7000	7000	9900	1725 rpm INPUT
1225	5600	5600	5490	4022	4003	5600	5600	5419	4007	7000	7000	9900	
1225	5600	5600	5490	4222	4199	5600	5600	5742	4205	7000	7000	9900	15
1267	5600	5600	5490	4508	4479	5600	5600	6220	4487	7000	7000	9900	(14-2/3)
1267	5600	5699	5490	5899	5500	5600	5600	6636	5500	7000	7000	9900	
1267	5600	5600	5490	6636	5500	5600	5600	6636	5500	7000	7000	9900	OUTPUT 115 rpm
1225	5600	5600	5490	4401	4385	5600	5600	5761	4375	7000	7000	9900	1725 rpm INPUT
1225	5600	5600	5490	4805	4785	5600	5600	6335	4772	7000	7000	9900	
1225	5600	5600	5490	5095	5071	5600	5600	6636	5057	7000	7000	9900	20
1267	5600	5600	5490	5514	5484	5600	5600	6636	5467	7000	7000	9900	(20-1/2)
1267	5600	5600	5490	6636	5500	5600	5600	6636	5500	7000	7000	9900	
1267	5600	5600	5490	6636	5500	5600	5600	6636	5500	7000	7000	9900	OUTPUT 86.3 rpm
1225	5600	5600	5490	4707	4692	5600	5600	6170	4695	7000	7000	9900	1725 rpm INPUT
1225	5600	5600	5490	5183	5165	5600	5600	6636	5169	7000	7000	9900	
1225	5600	5600	5490	5469	5447	5600	5600	6636	5452	7000	7000	9900	25
1267	5600	5600	5490	6031	5500	5600	5600	6636	5500	7000	7000	9900	
1267	5600	5600	5490	6636	5500	5600	5600	6636	5500	7000	7000	9900	
1267	5600	5600	5490	6636	5500	5600	5600	6636	5500	7000	7000	9900	OUTPUT 69.0 rpm
1225	5600	5600	5490	5167	5500	5600	5600	6636	5136	7000	7000	9900	1725 rpm INPUT
1225	5600	5600	5490	5683	5500	5600	5600	6636	5500	7000	7000	9900	
1225	5600	5600	5490	6063	5500	5600	5600	6636	5500	7000	7000	9900	30
1267	5600	5600	5490	6628	5500	5600	5600	6636	5500	7000	7000	9900	
1267	5600	5600	5490	6636	5500	5600	5600	6636	5500	7000	7000	9900	
1267	5600	5600	5490	6636	5500	5600	5600	6636	5500	7000	7000	9900	OUTPUT 57.5 rpm
1225	5600	5600	5490	5822	5500	5600	5600	6636	5500	7000	7000	9900	1725 rpm INPUT
1225	5600	5600	5490	6434	5500	5600	5600	6636	5500	7000	7000	9900	
1225	5600	5600	5490	6636	5500	5600	5600	6636	5500	7000	7000	9900	40
1267	5600	5600	5490	6636	5500	5600	5600	6636	5500	7000	7000	9900	
1267	5600	5600	5490	6636	5500	5600	5600	6636	5500	7000	7000	9900	
1267	5600	5600	5490	6636	5500	5600	5600	6636	5500	7000	7000	9900	OUTPUT 43.1 rpm
1225	5600	5600	5490	6417	5500	5600	5600	6636	5500	7000	7000	9900	1725 rpm INPUT
1225	5600	5600	5490	6636	5500	5600	5600	6636	5500	7000	7000	9900	
1235	5600	5600	5490	6636	5500	5600	5600	6636	5500	7000	7000	9900	50
1267	5600	5600	5490	6636	5500	5600	5600	6636	5500	7000	7000	9900	(51)
1267	5600	5600	5490	6636	5500	5600	5600	6636	5500	7000	7000	9900	
1267	5600	5600	5490	6636	5500	5600	5600	6636	5500	7000	7000	9900	OUTPUT 34.5 rpm
1225	5600	5600	5490	6636	5500	5600	5600	6636	5500	7000	7000	9900	1725 rpm INPUT
1267	5600	5600	5490	6636	5500	5600	5600	6636	5500	7000	7000	9900	
1267	5600	5600	5490	6636	5500	5600	5600	6636	5500	7000	7000	9900	60
1267	5600	5600	5490	6636	5500	5600	5600	6636	5500	7000	7000	9900	
1267	5600	5600	5490	6636	5500	5600	5600	6636	5500	7000	7000	9900	
1267	5600	5600	5490	6636	5500	5600	5600	6636	5500	7000	7000	9900	OUTPUT 28.8 rpm

****Overhung load given at one shaft diameter from housing or mounting flange.*

‡ O.H.L. based on maximum bore. Use of smaller diameter shaft may limit O.H.L.

† 12.438" from centerline.

5

SINGLE REDUCTION SERIES REDUCER NO. 13

All ratings stated are for A.G.M.A. Class 1 service.

HORSEPOWER AND TORQUE RATINGS

RATIO **	INPUT SPEED RPM	MECHANICAL★ OUTPUT TORQUE IN LBS	MECHANICAL★ OUTPUT HP	MECHANICAL★ INPUT HP	THERMAL★ OUTPUT TORQUE IN LBS	THERMAL★ OUTPUT HP	THERMAL★ INPUT HP	GRTMR HP 1800 RPM / O/P TQUE	FAN COOLED — THERMAL★ OUTPUT TORQUE In LBS	FAN COOLED — THERMAL★ OUTPUT HP	FAN COOLED — THERMAL★ INPUT HP	
1725 rpm INPUT	1800	12581	35.06	38.19	9581	26.70	29.36	30	11060	30.82	33.71	30
10	1200	15858	29.46	32.26	12077	22.43	24.78		13941	25.90	28.47	
(10-1/4)	900	18049	25.15	27.71	13745	19.15	21.28		15867	22.11	24.45	
	600	23330	21.67	24.07	17767	16.50	18.47	9581	20510	19.05	21.23	
	300	30156	14.00	15.92	22965	10.67	12.22		26511	12.31	14.04	
OUTPUT 172.5 rpm	100	35784	5.54	6.66	27251	4.22	5.13	*	31458	4.87	5.88	9794
1725 rpm INPUT	1800	13731	25.58	28.72	10381	19.34	22.00	20	12071	22.49	25.39	25
15	1200	17308	21.49	24.31	13086	16.25	18.60		15216	18.90	21.48	
(15-1/3)	900	19858	18.49	21.08	15014	13.98	16.13		17458	16.26	18.63	
	600	25386	15.76	18.17	19193	11.92	13.88		22317	13.86	16.05	
	300	32452	10.08	11.98	24535	7.62	9.16	9381	28530	8.86	10.58	
OUTPUT 115 rpm	100	33610	3.48	4.48	28900	2.99	3.89		33605	3.48	4.48	11873
1725 rpm INPUT	1800	13702	19.57	22.40	10318	14.74	17.16	15	12139	17.34	19.98	20
20	1200	17272	16.44	18.96	13006	12.38	14.50		15302	14.57	16.90	
	900	20202	14.42	16.75	15213	10.86	12.80		17897	12.78	14.93	
	600	24716	11.76	13.85	18611	8.86	10.58		21895	10.42	12.34	
	300	30234	7.20	8.78	22768	5.42	6.72		26786	6.38	7.83	
OUTPUT 86.3 rpm	100	34583	2.74	3.65	26043	2.07	2.81	9309	30639	2.43	3.26	12134
1725 rpm INPUT	1800	14408	16.46	19.71	10598	12.11	14.81	15	12598	14.39	17.40	15
25	1200	18162	13.83	16.75	13359	10.17	12.56		15879	12.09	14.76	
	900	21404	12.23	14.97	15743	8.99	11.21		18714	10.69	13.18	
	600	26752	10.19	12.70	19676	7.49	9.50		23389	8.91	11.18	
	300	31750	6.05	7.92	25589	4.87	6.46	10598	30418	5.79	7.61	
OUTPUT 69 rpm	100	31750	2.02	2.98	30488	1.94	2.87	*	31750	2.02	2.98	10743
1725 rpm INPUT	1800	14498	13.80	17.26	10527	10.02	12.86	10	12607	12.00	15.16	15
30	1200	18275	11.60	14.72	13269	8.42	10.94		15891	10.09	12.92	
	900	21538	10.25	13.19	15638	7.44	9.79		18728	8.91	11.57	
	600	26969	8.56	11.27	19582	6.21	8.35		23451	7.44	9.88	
	300	35787	5.68	7.90	25985	4.12	5.85		31119	4.94	6.92	
OUTPUT 57.5 rpm	100	37110	1.96	3.13	31378	1.66	2.68	7949	37110	1.96	3.13	12454
1725 rpm INPUT	1800	13874	9.91	12.64	10011	7.15	9.44	10	12265	8.76	11.31	10
40	1200	17489	8.33	10.74	12619	6.01	8.00		15460	7.36	9.60	
	900	20471	7.31	9.54	14770	5.27	7.10		18096	6.46	8.52	
	600	24900	5.93	7.91	17967	4.28	5.88		22011	5.24	7.06	
	300	30289	3.60	5.10	21855	2.60	3.80	10011	26775	3.19	4.56	
OUTPUT 43.1 rpm	100	33334	1.32	2.15	24904	0.99	1.67	*	30510	1.21	1.99	10679
1725 rpm INPUT	1800	13790	7.88	11.00	9661	5.52	8.06	7-1/2	12057	6.89	9.77	10
50	1200	17383	6.62	9.42	12177	4.64	6.87		15198	5.79	8.35	
	900	20486	5.85	8.47	14351	4.10	6.16		17911	5.12	7.50	
	600	25591	4.87	7.27	17928	3.41	5.28		22375	4.26	6.43	
	300	31750	3.02	4.87	23253	2.21	3.68		29021	2.76	4.49	12057
OUTPUT 34.5 rpm	100	31750	1.01	1.96	27655	0.88	1.74	8870	31750	1.01	1.96	*
1725 rpm INPUT	1800	13215	6.40	9.72	8986	4.36	6.98	7-1/2	11430	5.53	8.56	7-1/2
60	1200	16658	5.38	8.36	11328	3.66	5.98		14407	4.65	7.36	
(59)	900	19632	4.75	7.56	13350	3.23	5.38		16979	4.11	6.64	
	600	24559	3.96	6.54	16700	2.70	4.64		21240	3.43	5.74	
	300	24961	2.01	3.72	22607	1.82	3.41	8986	24961	2.01	3.72	
OUTPUT 28.8 rpm	100	24961	0.67	1.55	24961	0.67	1.55	*	24961	0.67	1.55	9782

**Numbers shown in ( ) are exact ratios

★ *Mechanical ratings indicated above apply to both non-fan cooled and fan cooled units.*

*Motor H.P. exceeds reducer capacity. Output must be limited to torque shown.

Center distance 7.625".

Thermal input horsepower must not be exceeded for class 1, 2, or 3 service.

REDUCER NO 13

***SHAFT OVERHUNG AND THRUST LOADS (includes Fan Cooled and Motorized where applicable)

ALL	CB-CT	CV (VERTICAL SHAFT)				L (DROP BEARING)				S (SHAFT MOUNT)			
INPUT OHL	OUTPUT OHL	OUTPUT UP OHL	OUTPUT DOWN OHL	OUTPUT THRUST DOWN	OUTPUT THRUST UP	OUTPUT UP OHL	OUTPUT DOWN OHL	OUTPUT THRUST DOWN	OUTPUT THRUST UP	OUTPUT THRUST TO BASE	OUTPUT THRUST FROM BASE	OUTPUT OHL ‡ †	RATIO
1170	6924	6924	6653	3995	3980								1725 rpm INPUT
1220	6924	6924	6653	4250	4231								
1268	6924	6924	6653	4519	4497								10
1268	6924	6924	6653	4637	4608								(10-1/4)
1268	6924	6924	6653	5426	5389								
1268	6924	6924	6653	6715	6092								OUTPUT 172.5 rpm
1217	6924	6924	6653	4963	4950								1725 rpm INPUT
1268	6924	6924	6653	5375	5359								
1268	6924	6924	6653	5739	5720								15
1268	6924	6924	6653	6103	6079								(15-1/3)
1268	6924	6924	6653	6715	6092								
1268	6924	6924	6653	6715	6092								OUTPUT 115 rpm
1268	6924	6924	6653	6089	6089								1725 rpm INPUT
1268	6924	6924	6653	6715	6092								
1268	6924	6924	6653	6715	6092								20
1268	6924	6924	6653	6715	6092								
1268	6924	6924	6653	6715	6092								
1268	6924	6924	6653	6715	6092								OUTPUT 86.3 rpm
1268	6924	6924	6653	6289	6092								1725 rpm INPUT
1268	6924	6924	6653	6715	6092								
1268	6924	6924	6653	6715	6092								25
1268	6924	6924	6653	6715	6092								
1268	6924	6924	6653	6715	6092								
1268	6924	6924	6653	6715	6092								OUTPUT 69 rpm
1268	6924	6924	6653	6715	6092								1725 rpm INPUT
1268	6924	6924	6653	6715	6092								
1268	6924	6924	6653	6715	6092								30
1268	6924	6924	6653	6715	6092								
1268	6924	6924	6653	6715	6092								
1268	6924	6924	6653	6715	6092								OUTPUT 57.5 rpm
1268	6924	6924	6653	6715	6092								1725 rpm INPUT
1268	6924	6924	6653	6715	6092								
1268	6924	6924	6653	6715	6092								40
1268	6924	6924	6653	6715	6092								
1268	6924	6924	6653	6715	6092								
1268	6924	6924	6653	6715	6092								OUTPUT 43.1 rpm
1268	6924	6924	6653	6715	6092								1725 rpm INPUT
1268	6924	6924	6653	6715	6092								
1268	6924	6924	6653	6715	6092								50
1268	6924	6924	6653	6715	6092								
1268	6924	6924	6653	6715	6092								
1268	6924	6924	6653	6715	6092								OUTPUT 34.5 rpm
1268	6924	6924	6653	6715	6092								1725 rpm INPUT
1268	6924	6924	6653	6715	6092								
1268	6924	6924	6653	6715	6092								60
1268	6924	6924	6653	6715	6092								
1268	6924	6924	6653	6715	6092								(59)
1268	6924	6924	6653	6715	6092								OUTPUT 28.8 rpm

***Overhung load given at one shaft diameter from housing or mounting flange.

‡ O.H.L. based on maximum bore. Use of smaller diameter shaft may limit O.H.L.

5

SINGLE REDUCTION SERIES REDUCER NO. 14

All ratings stated are for A.G.M.A. Class 1 service.

HORSEPOWER AND TORQUE RATINGS

RATIO **		MECHANICAL★				THERMAL★				FAN COOLED – THERMAL★			
	INPUT SPEED RPM	OUTPUT TORQUE IN. LBS.	OUTPUT HP	INPUT HP	OUTPUT TORQUE IN. LBS.	OUTPUT HP	INPUT HP	GRTMR HP 1800 RPM / O/P TQUE	OUTPUT TORQUE In. LBS.	OUTPUT HP	INPUT HP	
1725 rpm INPUT	1800	14541	43.71	47.51	11105	33.39	36.61	40	12783	38.43	41.93	40
	1200	18329	36.73	40.16	13998	28.06	30.92		16113	32.29	35.43	
10	900	21601	32.47	35.69	16498	24.80	27.47		18990	28.54	31.49	
(9-1/2)	600	26923	26.98	29.94	20562	20.61	23.04		23669	23.72	26.41	
	300	37210	18.64	21.14	28418	14.24	16.27	11105	32712	16.39	18.65	12396
OUTPUT 172.5 rpm	100	42459	7.09	8.50	35260	5.89	7.11	✲	40587	6.78	8.14	
1725 rpm INPUT	1800	15098	29.75	32.29	11632	22.92	25.03	25	13526	26.65	29.00	30
	1200	19031	25.00	27.34	14662	19.26	21.18		17049	22.40	24.55	
15	900	22010	21.69	23.87	16957	16.71	18.49		19718	19.43	21.43	
(15-1/3)	600	27771	18.24	20.29	21396	14.05	15.70	11617	24879	16.34	18.21	13526
	300	32418	10.65	12.15	26996	8.87	10.15		31391	10.31	11.77	
OUTPUT 115.0 rpm	100	32418	3.55	4.29	31522	3.45	4.18		32418	3.55	4.29	✲
1725 rpm INPUT	1800	16275	24.46	28.33	12179	18.31	21.55	20	14307	21.51	25.07	25
	1200	20514	20.56	24.06	15352	15.38	18.27		18035	18.07	21.28	
20	900	24177	18.17	21.46	18093	13.60	16.29		21254	15.97	18.98	
(19)	600	30224	15.14	18.18	22618	11.33	13.79		26571	13.31	16.07	14302
	300	41118	10.30	12.83	30771	7.71	9.73	11674	36148	9.06	11.34	
OUTPUT 86.3 rpm	100	42459	3.55	4.87	37780	3.15	4.36		42459	3.55	4.87	
1725 rpm INPUT	1800	16506	18.49	22.36	12207	13.67	16.89	15	14511	16.25	19.82	20
	1200	20806	15.54	19.04	15388	11.49	14.36		18291	13.66	16.87	
25	900	24521	13.73	17.03	18135	10.16	12.83		21557	12.07	15.08	
(25-1/2)	600	30664	11.45	14.49	22678	8.47	10.91		26958	10.06	12.83	14511
	300	34760	6.49	8.69	30780	5.75	7.75	10715	34760	6.49	8.69	
OUTPUT 67.7 rpm	100	34760	2.16	3.29	34760	2.16	3.29		34760	2.16	3.29	*
1725 rpm INPUT	1800	16411	14.65	17.69	12081	10.79	13.20	15	14555	13.00	15.77	15
	1200	20686	12.31	15.14	15228	9.06	11.28		18347	10.92	13.49	
30	900	24379	10.88	13.58	17946	8.01	10.11		21622	9.65	12.09	
(32)	600	30527	9.09	11.61	22472	6.69	8.63		27075	8.06	10.34	
	300	40508	6.03	8.11	29820	4.44	6.03	12081	35928	5.35	7.22	13817
OUTPUT 57.5 rpm	100	47182	2.34	3.53	36009	1.79	2.72	✲	43385	2.15	3.25	
1725 rpm INPUT	1800	16399	12.32	16.16	11839	8.90	12.05	10	14416	10.83	14.37	15
	1200	20671	10.36	13.82	14924	7.48	10.28		18172	9.10	12.28	
40	900	24361	9.15	12.14	17588	6.61	9.21		21416	8.05	11.02	
(38)	600	30471	7.63	10.64	21999	5.51	7.89		26788	6.71	9.44	14416
	300	41286	5.17	7.67	29808	3.73	5.68	10361	36295	4.55	6.80	
OUTPUT 43.1 rpm	100	42459	1.77	3.07	36498	1.52	2.68		42459	1.77	3.07	✲
1725 rpm INPUT	1800	15695	8.79	12.51	11021	6.17	9.19	10	13797	7.73	11.16	10
	1200	19783	7.39	10.74	13892	5.19	7.86		17392	6.49	9.57	
50	900	23315	6.53	9.68	16372	4.58	7.07		20497	5.74	8.62	
(51)	600	29165	5.44	8.35	20479	3.82	6.08	11021	25639	4.79	7.43	
	300	33080	3.09	5.19	27732	2.59	4.43		33080	3.09	5.19	12155
OUTPUT 34.5 rpm	100	33080	1.03	2.11	33080	1.03	2.11	*	33080	1.03	2.11	
1725 rpm INPUT	1800	14832	7.06	10.43	10350	4.93	7.69	7-1/2	13184	6.28	9.42	10
	1200	18696	5.93	8.94	13046	4.14	6.56		16619	5.27	8.07	
60	900	22034	5.24	8.06	15375	3.66	5.90		19586	4.66	7.26	
	600	27524	4.37	6.94	19206	3.05	5.07		24466	3.88	6.25	13184
	300	33260	2.64	4.58	24906	1.98	3.56	10036	31727	2.52	4.40	
OUTPUT 28.8 rpm	100	33260	0.88	1.88	29617	0.78	1.71		33260	0.88	1.88	*

**Numbers shown in ( ) are exact ratios

★ Mechanical ratings indicated above apply to both non-fan cooled and fan cooled units.

*Motor H.P. exceeds reducer capacity. Output must be limited to torque shown.

Center distance 8.125".

Thermal input horsepower must not be exceeded for class 1, 2, or 3 service.

REDUCER NO. 14

***SHAFT OVERHUNG AND THRUST LOADS (includes Fan Cooled and Motorized where applicable)

ALL	CB-CT	CV (VERTICAL SHAFT)				L (DROP BEARING)				S (SHAFT MOUNT)			RATIO
INPUT OHL	OUTPUT OHL	OUTPUT UP OHL	OUTPUT DOWN OHL	OUTPUT THRUST DOWN	OUTPUT THRUST UP	OUTPUT UP OHL	OUTPUT DOWN OHL	OUTPUT THRUST DOWN	OUTPUT THRUST UP	OUTPUT THRUST TO BASE	OUTPUT THRUST FROM BASE	OUTPUT OHL ‡†	
1532	7438	7438	7353	5123	5111								1725 rpm INPUT
1699	7438	7438	7353	5545	5529								10
1731	7438	7438	7353	5821	5803								(9-1/2)
1731	7438	7438	7353	6229	6206								
1731	7438	7438	7353	6613	6613								
1731	7438	7438	7353	6613	6613								OUTPUT 172.5 rpm
1578	7438	7438	7353	6274	6274								1725 rpm INPUT
1606	7438	7438	7353	6613	6613								15
1722	7438	7438	7353	6613	6613								(14-1/2)
1731	7438	7438	7353	6613	6613								
1731	7438	7438	7353	6613	6613								
1731	7438	7438	7353	6613	6613								OUTPUT 115.0 rpm
1579	7438	7438	7353	6613	6613								1725 rpm INPUT
1731	7438	7438	7353	6613	6613								20
1731	7438	7438	7353	6613	6613								(19)
1731	7438	7438	7353	6613	6613								
1731	7438	7438	7353	6613	6613								
1731	7438	7438	7353	6613	6613								OUTPUT 86.3 rpm
1563	7438	7438	7353	6613	6613								1725 rpm INPUT
1684	7438	7438	7353	6613	6613								25
1731	7438	7438	7353	6613	6613								(25-1/2)
1731	7438	7438	7353	6613	6613								
1731	7438	7438	7353	6613	6613								
1731	7438	7438	7353	6613	6613								OUTPUT 67.7 rpm
1561	7438	7438	7353	6613	6613								1725 rpm INPUT
1711	7438	7438	7353	6613	6613								30
1731	7438	7438	7353	6613	6613								(32)
1731	7438	7438	7353	6613	6613								
1731	7438	7438	7353	6613	6613								
1731	7438	7438	7353	6613	6613								OUTPUT 57.5 rpm
1617	7438	7438	7353	6613	6613								1725 rpm INPUT
1731	7438	7438	7353	6613	6613								40
1731	7438	7438	7353	6613	6613								(38)
1731	7438	7438	7353	6613	6613								
1731	7438	7438	7353	6613	6613								
1731	7438	7438	7353	6613	6613								OUTPUT 43.1 rpm
1586	7438	7438	7353	6613	6613								1725 rpm INPUT
1684	7438	7438	7353	6613	6613								50
1726	7438	7438	7353	6613	6613								(51)
1731	7438	7438	7353	6613	6613								
1731	7438	7438	7353	6613	6613								
1731	7438	7438	7353	6613	6613								OUTPUT 34.5 rpm
1570	7438	7438	7353	6613	6613								1725 rpm INPUT
1684	7438	7438	7353	6613	6613								60
1726	7438	7438	7353	6613	6613								
1731	7438	7438	7353	6613	6613								
1731	7438	7438	7353	6613	6613								
1731	7438	7438	7353	6613	6613								OUTPUT 28.8 rpm

***Overhung load given at one shaft diameter from housing or mounting flange.

‡ O.H.L. based on maximum bore. Use of smaller diameter shaft may limit O.H.L.

5

SINGLE REDUCTION SERIES REDUCER NO. 15

All ratings stated are for A.G.M.A. Class 1 service.

HORSEPOWER AND TORQUE RATINGS

RATIO **	INPUT SPEED RPM	MECHANICAL★ OUTPUT TORQUE IN LBS	MECHANICAL★ OUTPUT HP	MECHANICAL★ INPUT HP	THERMAL★ OUTPUT TORQUE IN LBS	THERMAL★ OUTPUT HP	THERMAL★ INPUT HP	THERMAL★ GRTMR HP 1800 RPM / O/P TQUE	FAN COOLED – THERMAL★ OUTPUT TORQUE In LBS	FAN COOLED – THERMAL★ OUTPUT HP	FAN COOLED – THERMAL★ INPUT HP	FAN COOLED – THERMAL★
1725 rpm INPUT	1800	17698	51.84	56.28	13957	40.88	44.75	40	16089	47.13	51.32	50
10	1200	22308	43.57	47.59	17593	34.36	37.82		20281	39.60	43.38	
(9-3/4)	900	26291	38.51	42.30	20734	30.37	33.61		23901	35.00	38.56	
	600	32737	31.97	35.45	25818	25.21	28.16		29762	29.06	32.31	
	300	45421	22.18	25.10	35821	17.49	19.94		41292	20.16	22.88	
OUTPUT 172.5 rpm	100	56502	9.20	10.96	44559	7.25	8.73	12411	51366	8.36	10.00	15653
1725 rpm INPUT	1800	18778	35.18	38.39	14766	27.67	30.36	30	17170	32.17	35.17	40
15	1200	23670	29.57	32.52	18613	23.25	25.71		21643	27.03	29.79	
(15-1/4)	900	27896	26.13	28.94	21936	20.55	22.87		25507	23.89	26.51	
	600	34831	21.75	24.36	27390	17.11	19.24		31848	19.89	22.31	
	300	45071	14.07	16.17	35443	11.07	12.77		41213	12.87	14.81	17170
OUTPUT 115 rpm	100	53520	5.57	6.78	42089	4.38	5.36	14587	48940	5.09	6.21	*
1725 rpm INPUT	1800	19824	29.04	33.53	15363	22.50	26.37	25	18022	26.40	30.63	30
20	1200	24989	24.40	28.47	19366	18.91	22.37		22717	22.18	26.00	
(19-1/2)	900	29450	21.57	25.40	22823	16.71	19.96		26773	19.61	23.20	
	600	36811	17.97	21.51	28528	13.93	16.89		33465	16.34	19.64	
	300	50131	12.24	15.17	38851	9.48	11.91		45574	11.12	13.85	
OUTPUT 86.3 rpm	100	61592	5.01	6.77	47733	3.88	5.33	14504	55993	4.56	6.19	17619
1725 rpm INPUT	1800	20092	22.07	26.56	15366	16.88	20.72	20	18266	20.06	24.30	25
25	1200	25327	18.55	22.61	19369	14.18	17.62		23025	16.86	20.68	
(26)	900	29848	16.39	20.23	22827	12.54	15.75		27135	14.90	18.50	
	600	37323	13.67	17.20	28544	10.45	13.38		33930	12.42	15.73	
	300	50693	9.28	12.20	38769	7.10	9.49		46085	8.44	11.16	18266
OUTPUT 69 rpm	100	52354	3.20	4.73	47548	2.90	4.33	14780	52355	3.19	4.73	*
1725 rpm INPUT	1800	19714	18.47	21.63	15050	14.10	16.70	15	18024	16.89	19.84	20
30	1200	24850	15.52	18.43	18971	11.85	14.22		22720	14.19	16.90	
(30-1/2)	900	28472	13.34	16.04	21736	10.18	12.36		26032	12.19	14.71	
	600	36472	11.39	13.95	27842	8.69	10.74		33344	10.41	12.79	
	300	46715	7.29	9.33	35663	5.57	7.18		42711	6.67	8.55	18024
OUTPUT 57.5 rpm	100	55094	2.87	4.04	42063	2.19	3.11	13440	50375	2.62	3.70	*
1725 rpm INPUT	1800	19930	14.60	19.03	14834	10.86	14.60	15	18119	13.27	17.46	15
40	1200	25122	12.27	16.28	18699	9.13	12.47		22839	11.15	14.92	
(39)	900	29607	10.84	14.62	22037	8.07	11.19		26916	9.85	13.40	
	600	37032	9.04	12.53	27563	6.73	9.57		33666	8.22	11.48	
	300	50189	6.13	9.00	37356	4.56	6.88	14834	45627	5.57	8.24	
OUTPUT 43.1 rpm	100	61465	2.50	4.22	45749	1.86	3.24	*	55878	2.27	3.87	15284
1725 rpm INPUT	1800	19124	10.71	15.03	13908	7.79	11.40	10	17386	9.74	13.82	15
50	1200	24106	9.00	12.90	17532	6.55	9.75		21915	8.18	11.85	
(51)	900	28410	7.96	11.62	20662	5.79	8.78		25827	7.23	10.68	
	600	35537	6.63	10.01	25845	4.82	7.55		32307	6.03	9.19	
	300	48130	4.49	7.27	35004	3.27	5.47		43755	4.08	6.67	17386
OUTPUT 34.5 rpm	100	52354	1.63	3.15	42849	1.33	2.65	11896	52354	1.63	3.15	*
1725 rpm INPUT	1800	18218	8.68	11.88	13001	6.19	8.71	10	16562	7.89	10.87	10
60	1200	22965	7.29	10.24	16388	5.20	7.49		20877	6.63	9.37	
	900	27064	6.44	9.25	19314	4.60	6.75		24604	5.86	8.45	
	600	33855	5.37	7.98	24160	3.84	5.81	13001	30777	4.89	7.29	
	300	45843	3.64	5.82	32716	2.60	4.22		41676	3.31	5.31	
OUTPUT 28.8 rpm	100	48070	1.27	2.40	40043	1.06	2.02	*	48070	1.27	2.40	15132

**Numbers shown in ( ) are exact ratios

★ *Mechanical ratings indicated above apply to both non-fan cooled and fan cooled units.*

*Motor H.P. exceeds reducer capacity. Output must be limited to torque shown.

Center distance 9.000".

Thermal input horsepower must not be exceeded for class 1, 2, or 3 service.

REDUCER NO. **15**

***SHAFT OVERHUNG AND THRUST LOADS (includes Fan Cooled and Motorized where applicable)

ALL	CB-CT	CV (VERTICAL SHAFT)				L (DROP BEARING)				S (SHAFT MOUNT)			RATIO
INPUT OHL	OUTPUT OHL	OUTPUT UP OHL	OUTPUT DOWN OHL	OUTPUT THRUST DOWN	OUTPUT THRUST UP	OUTPUT UP OHL	OUTPUT DOWN OHL	OUTPUT THRUST DOWN	OUTPUT THRUST UP	OUTPUT THRUST TO BASE	OUTPUT THRUST FROM BASE	OUTPUT OHL ‡ †	
1821	15496	15496	15484	7000	7000								1725 rpm INPUT
2013	15496	15496	15484	7000	7000								10
2159	15496	15496	15484	7000	7000								(9-3/4)
2379	15496	15496	15484	7000	7000								
2397	15496	15496	15484	7000	7000								
2397	15496	15496	15484	7000	7000								OUTPUT 172.5 rpm
2089	15496	15496	15484	7000	7000								1725 rpm INPUT
2328	15496	15496	15484	7000	7000								15
2397	15496	15496	15484	7000	7000								(15-1/4)
2397	15496	15496	15484	7000	7000								
2397	15496	15496	15484	7000	7000								
2397	15496	15496	15484	7000	7000								OUTPUT 115 rpm
1877	15496	15496	15484	7000	7000								1725 rpm INPUT
2086	15496	15496	15484	7000	7000								20
2243	15496	15496	15484	7000	7000								(19-1/2)
2397	15496	15496	15484	7000	7000								
2397	15496	15496	15484	7000	7000								
2397	15496	15496	15484	7000	7000								OUTPUT 86.3 rpm
1906	15496	15496	15484	7000	7000								1725 rpm INPUT
2124	15496	15496	15484	7000	7000								25
2288	15496	15496	15484	7000	7000								(26)
2397	15496	15496	15484	7000	7000								
2397	15496	15496	15484	7000	7000								
2397	15496	15496	15484	7000	7000								OUTPUT 69 rpm
2158	15496	15496	15484	7000	7000								1725 rpm INPUT
2397	15496	15496	15484	7000	7000								30
2397	15496	15496	15484	7000	7000								(30-1/2)
2397	15496	15496	15484	7000	7000								
2397	15496	15496	15484	7000	7000								
2397	15496	15496	15484	7000	7000								OUTPUT 57.5 rpm
1928	15496	15496	15484	7000	7000								1725 rpm INPUT
2153	15496	15496	15484	7000	7000								40
2323	15496	15496	15484	7000	7000								(39)
2397	15496	15496	15484	7000	7000								
2397	15496	15496	15484	7000	7000								
2397	15496	15496	15484	7000	7000								OUTPUT 43.1 rpm
1964	15496	15496	15484	7000	7000								1725 rpm INPUT
2197	15496	15496	15484	7000	7000								50
2375	15496	15496	15484	7000	7000								(51)
2397	15496	15496	15484	7000	7000								
2397	15496	15496	15484	7000	7000								
2397	15496	15496	15484	7000	7000								OUTPUT 34.5 rpm
2369	15496	15496	15484	7000	7000								1725 rpm INPUT
2397	15496	15496	15484	7000	7000								60
2397	15496	15496	15484	7000	7000								
2397	15496	15496	15484	7000	7000								
2397	15496	15496	15484	7000	7000								
2397	15496	15496	15484	7000	7000								OUTPUT 28.8 rpm

***Overhung load given at one shaft diameter from housing or mounting flange.

‡ O.H.L. based on maximum bore. Use of smaller diameter shaft may limit O.H.L.

5

DOUBLE AND TRIPLE REDUCTION REDUCER NO. 2

H Double Reduction Series Helical and Worm Gear
D Double Reduction Series Worm Gear
T Triple Reduction Series Worm Gear

All ratings stated are for A.G.M.A. Class 1 service.

HORSEPOWER TORQUE AND

OVERALL RATIO	INPUT SPEED R.P.M.	OUTPUT R.P.M.	RATIOS★ DOUBLE 1ST	RATIOS★ DOUBLE 2ND	RATIOS★ TRIPLE 3RD	INPUT H.P.	OUTPUT TORQUE INCH LBS.	GEARMOTOR H.P. @ 1800 / OUTPUT TORQUE INCH LBS.	CBX-CTX CVX-LX INPUT O.H.L.	CBD-CVD SFD-CTD LD INPUT O.H.L.	CTT-CVT SFT INPUT O.H.L.	CBD-CTD CBX-CTX CTT OUTPUT O.H.L.
1725 rpm INPUT 50(D) OUTPUT 34.5 rpm	1800	36.00	5	10		0.60	595	1/2		146		286
	1200	24.00				0.43	595	460		146		286
	600	12.00				0.25	595			146		286
	100	2.00				0.07	595			146		286
1725 rpm INPUT 75(D) OUTPUT 23.0 rpm	1800	24.00	7-1/2	10		0.46	595	1/2		146		286
	1200	16.00				0.33	595	595		146		286
	600	8.00				0.19	595	*		146		286
	100	1.33				0.06	595			146		286
1725 rpm INPUT 100(D) OUTPUT 17.25 rpm	1800	18.00	20	5		0.42	583	1/2		146		286
	1200	12.00				0.31	591	583		146		286
	600	6.00				0.19	598	*		146		286
	100	1.00				0.06	604			146		286
1725 rpm INPUT 150(D) OUTPUT 11.5 rpm	1800	12.00	20	7-1/2		0.33	595	1/3		146		286
	1200	8.00				0.24	595	595		146		286
	600	4.00				0.15	595	*		146		286
	100	0.67				0.05	595			146		286
1725 rpm INPUT 200(D) OUTPUT 8.625 rpm	1800	9.00	20	10		0.29	595	1/3		146		286
	1200	6.00				0.22	595	595		146		286
	600	3.00				0.13	595	*		146		286
	100	0.50				0.04	595			146		286
1725 rpm INPUT 300(D) OUTPUT 5.75 rpm	1800	6.00	20	15		0.25	595	1/4		146		286
	1200	4.00				0.19	595	595		146		286
	600	2.00				0.12	595	*		146		286
	100	0.33				0.04	595			146		286
1725 rpm INPUT 500(D) OUTPUT 3.45 rpm	1800	3.60	20	25		0.22	621	1/4		146		286
	1200	2.40				0.17	621	621		146		286
	600	1.20				0.11	621	*		146		286
	100	0.20				0.04	621			146		286
1725 rpm INPUT 750(D) OUTPUT 2.3 rpm	1800	2.40	30	25		0.19	621	1/4		146		286
	1200	1.60				0.15	621	621		146		286
	600	0.80				0.09	621	*		146		286
	100	0.13				0.03	621			146		286
1725 rpm INPUT 1000(D) OUTPUT 1.725 rpm	1800	1.80	40	25		0.19	621	1/4		146		286
	1200	1.20				0.15	621	621		146		286
	600	0.60				0.09	621	*		146		286
	100	0.10				0.03	621			146		286
1725 rpm INPUT 1500(D) OUTPUT 1.15 rpm	1800	1.20	60	25		0.17	621	1/6		146		286
	1200	0.80				0.13	621	583		146		286
	600	0.40				0.08	621			146		286
	100	0.07				0.03	621			146		286
1725 rpm INPUT 2000(D) OUTPUT .863 rpm	1800	0.90	50	40		0.18	573	1/6		146		286
	1200	0.60				0.14	573	540		146		286
	600	0.30				0.09	573			146		286
	100	0.05				0.03	573			146		286
1725 rpm INPUT 3000(D) OUTPUT .575 rpm	1800	0.60	60	50		0.14	398	1/6		146		286
	1200	0.40				0.11	398	398		146		286
	600	0.20				0.07	398	*		146		286
	100	0.03				0.03	398			146		286
1725 rpm INPUT 3600(D) OUTPUT .479 rpm	1800	0.05	60	60		0.14	400	1/6		146		286
	1200	0.33				0.11	400	400		146		286
	600	0.17				0.07	400	*		146		286
	100	0.03				0.03	400			146		286

★*Numbers shown in ( ) are exact ratios.*

**Motor H.P. exceeds reducer capacity. Output must be limited to torque shown.*

D Center Distance: Primary 1.333" Secondary 1.750"
Maximum NEMA Motor Frame Size: 56C Flange.

REDUCER NO. 2

OVERHUNG LOAD RATINGS

**OVERHUNG AND THRUST LOAD-SHAFTS (INCLUDES MOTORIZED WHERE APPLICABLE)

CVX — CVD CVT		LD - LX		LD - LX		CVX-CVD-CVT		SFD-SFT-STD			OVERALL RATIO
OUTPUT O.H.L.		OUTPUT O.H.L.									
UP	DOWN	UP	DOWN	OUTPUT THRUST DOWN	OUTPUT THRUST UP	OUTPUT THRUST DOWN	OUTPUT THRUST UP	OUTPUT THRUST TOWARDS BASE	OUTPUT THRUST AWAY FROM BASE	OUTPUT O.H.L. ‡ ‡	
286	268					883	832				1725 rpm INPUT 50(D) OUTPUT 34.5 rpm
286	268					883	832				
286	268					883	832				
286	268					883	832				
286	268					883	832				1725 rpm INPUT 75(D) OUTPUT 23.0 rpm
286	268					883	832				
286	268					883	832				
286	268					883	832				
286	268					883	832				1725 rpm INPUT 100(D) OUTPUT 17.25 rpm
286	268					883	832				
286	268					883	832				
286	268					883	832				
286	268					883	832				1725 rpm INPUT 150(D) OUTPUT 11.5 rpm
286	268					883	832				
286	268					883	832				
286	268					883	832				
286	268					883	832				1725 rpm INPUT 200 (D) OUTPUT 8.625 rpm
286	268					883	832				
286	268					883	832				
286	268					883	832				
268	268					883	832				1725 rpm INPUT 300(D) OUTPUT 5.75 rpm
286	268					883	832				
286	268					883	832				
286	268					883	832				
286	268					883	832				1725 rpm INPUT 500 (D) OUTPUT 3.45 rpm
286	268					883	832				
286	268					883	832				
286	268					883	832				
286	268					883	832				1725 rpm INPUT 750 (D) OUTPUT 2.3 rpm
286	268					883	832				
286	268					883	832				
286	268					883	832				
286	268					883	832				1725 rpm INPUT 1000 (D) OUTPUT 1.725 rpm
286	268					883	832				
286	268					883	832				
286	268					883	832				
286	268					883	832				1725 rpm INPUT 1500 (D) OUTPUT 1.15 rpm
286	268					883	832				
286	268					883	832				
286	268					883	832				
286	268					883	832				1725 rpm INPUT 2000 (D) OUTPUT 86.3 rpm
286	268					883	832				
286	268					883	832				
286	268					883	832				
286	268					883	832				1725 rpm INPUT 3000(D) OUTPUT .575 rpm
286	268					883	832				
286	268					883	832				
286	268					883	832				
286	268					883	832				1725 rpm INPUT 3600 (D) OUTPUT .479 rpm
286	268					883	832				
286	268					883	832				
286	268					883	832				

***Overhung Load given at one shaft diameter from housing or mounting flange.*

‡ O.H.L. based on maximum bore. Use of smaller diameter shaft may limit O.H.L.

5

DOUBLE AND TRIPLE REDUCTION REDUCER NO. 3

H Double Reduction Series Helical and Worm Gear
D Double Reduction Series Worm Gear
T Triple Reduction Series Worm Gear

All ratings stated are for A.G.M.A. Class 1 service.

HORSEPOWER TORQUE AND

OVERALL RATIO	INPUT SPEED R.P.M.	OUTPUT R.P.M.	RATIOS★ DOUBLE 1ST	RATIOS★ DOUBLE 2ND	RATIOS★ TRIPLE 3RD	INPUT H.P.	OUTPUT TORQUE INCH LBS.	GEARMOTOR H.P. @ 1800 / OUTPUT TORQUE INCH LBS.	CBX-CTX CVX-LX INPUT O.H.L.	CBD-CVD SFD-CTD LD INPUT O.H.L.	CTT-CVT SFT INPUT O.H.L.	CBD-CTD CBX-CTX CTT OUTPUT O.H.L.
1725 rpm INPUT	1800	36.00				0.80	857			146		428
50(D)	1200	24.00	5	10		0.57	857	3/4		146		428
OUTPUT 34.5 rpm	600	12.00				0.32	857	783		146		428
	100	2.00				0.08	857			146		428
1725 rpm INPUT	1800	24.00				0.63	857			146		428
75(D)	1200	16.00	5	15		0.45	857	3/4		146		428
OUTPUT 23.0 rpm	600	8.00				0.26	857	857		146		428
	100	1.33				0.07	857	*		146		428
1725 rpm INPUT	1800	18.00				0.51	857			146		428
100(D)	1200	12.00	10	10		0.37	857	1/2		146		428
OUTPUT 17.25 rpm	600	6.00				0.22	857	843		146		428
	100	1.00				0.06	857			146		428
1725 rpm INPUT	1800	12.00				0.39	857			146		428
150(D)	1200	8.00	15	10		0.29	857	1/2		146		428
OUTPUT 11.5 rpm	600	4.00				0.17	857	857		146		428
	100	0.67				0.05	857	*		146		428
1725 rpm INPUT	1800	9.00				0.35	857			146		428
200(D)	1200	6.00	20	10		0.26	857	1/3		146		428
OUTPUT 8.625 rpm	600	3.00				0.16	857	771		146		428
	100	0.50				0.05	857			146		428
1725 rpm INPUT	1800	6.00				0.29	857			146		428
300(D)	1200	4.00	30	10		0.21	857	1/3		146		428
OUTPUT 5.75 rpm	600	2.00				0.13	857	857		146		428
	100	0.33				0.04	857	*		146		428
1725 rpm INPUT	1800	3.60				0.24	800			146		428
500(D)	1200	2.40	25	20		0.19	800	1/4		146		428
OUTPUT 3.45 rpm	600	1.20				0.12	800	800		146		428
	100	0.20				0.04	800	*		146		428
1725 rpm INPUT	1800	2.40				0.22	857			146		428
750(D)	1200	1.60	25	30		0.17	857	1/4		146		428
OUTPUT 2.3 rpm	600	0.80				0.11	857	857		146		428
	100	0.13				0.04	857	*		146		428
1725 rpm INPUT	1800	1.80				0.21	800			146		428
1000(D)	1200	1.20	25	40		0.16	800	1/4		146		428
OUTPUT 1.725 rpm	600	0.60				0.10	800	800		146		428
	100	0.10				0.04	800	*		146		428
1725 rpm INPUT	1800	1.20				0.18	740			146		428
1500(D)	1200	0.80	30	50		0.14	740	1/6		146		428
OUTPUT 1.15 rpm	600	0.40				0.09	740	553		146		428
	100	0.07				0.03	740			146		428
1725 rpm INPUT	1800	0.90				0.20	800			146		428
2000(D)	1200	0.60	50	40		0.15	800	1/4		146		428
OUTPUT .863 rpm	600	0.30				0.10	800	800		146		428
	100	0.05				0.03	800	*		146		428
1725 rpm INPUT	1800	0.60				0.16	740			146		428
3000(D)	1200	0.40	60	50		0.12	740	1/6		146		428
OUTPUT .575 rpm	600	0.20				0.08	740	740		146		428
	100	0.03				0.03	740	*		146		428
1725 rpm INPUT	1800	0.50				0.16	650			146		428
3600(D)	1200	0.33	60	60		0.12	650	1/6		146		428
OUTPUT .479 rpm	600	0.17				0.07	650	650		146		428
	100	0.03				0.03	650	*		146		428

★*Numbers shown in ( ) are exact ratios.*

**Motor H.P. exceeds reducer capacity. Output must be limited to torque shown.*

D Center Distance: Primary 1.333" Secondary 2.000"
Maximum NEMA Motor Frame Size: 56C Flange.

REDUCER NO.
3

OVERHUNG LOAD RATINGS

**OVERHUNG AND THRUST LOAD-SHAFTS (INCLUDES MOTORIZED WHERE APPLICABLE)

CVX — CVD CVT		LD - LX		LD - LX		CVX-CVD-CVT		SFD-SFT-STD			OVERALL RATIO
OUTPUT O.H.L.		OUTPUT O.H.L.									
UP	DOWN	UP	DOWN	OUTPUT THRUST DOWN	OUTPUT THRUST UP	OUTPUT THRUST DOWN	OUTPUT THRUST UP	OUTPUT THRUST TOWARDS BASE	OUTPUT THRUST AWAY FROM BASE	OUTPUT O.H.L. ‡ †	
428	402					1112	1105	2115	1248	1224	1725 rpm INPUT
428	402					1117	1117	2115	1248	1224	50(D)
428	402					1117	1117	2115	1248	1224	
482	402					1117	1117	2115	1248	1224	OUTPUT 34.5 rpm
428	402					1117	1117	2115	1248	1224	1725 rpm INPUT
428	402					1117	1117	2115	1248	1224	75(D)
428	402					1117	1117	2115	1248	1224	
428	402					1117	1117	2115	1248	1224	OUTPUT 23.0 rpm
428	402					1117	1117	2115	1248	1224	1725 rpm INPUT
428	402					1117	1117	2115	1248	1224	100(D)
428	402					1117	1117	2115	1248	1224	
428	402					1117	1117	2115	1248	1224	OUTPUT 17.25 rpm
428	402					1117	1117	2115	1248	1224	1725 rpm INPUT
428	402					1117	1117	2115	1248	1224	150(D)
428	402					1117	1117	2115	1248	1224	
428	402					1117	1117	2115	1248	1224	OUTPUT 11.5 rpm
428	402					1117	1117	2115	1248	1224	1725 rpm INPUT
428	402					1117	1117	2115	1248	1224	200(D)
428	402					1117	1117	2115	1248	1224	
428	402					1117	1117	2115	1248	1225	OUTPUT 8.625 rpm
428	402					1117	1117	2115	1248	1224	1725 rpm INPUT
428	402					1117	1117	2115	1248	1224	300(D)
428	402					1117	1117	2115	1248	1224	
428	402					1117	1117	2115	1248	1224	OUTPUT 5.75 rpm
428	402					1117	1117	2115	1248	1224	1725 rpm INPUT
428	402					1117	1117	2115	1248	1224	500(D)
428	402					1117	1117	2115	1248	1224	
428	402					1117	1117	2115	1248	1224	OUTPUT 3.45 rpm
428	402					1117	1117	2115	1248	1224	1725 rpm INPUT
428	402					1117	1117	2115	1248	1224	750(D)
428	402					1117	1117	2115	1248	1224	
428	402					1117	1117	2115	1248	1224	OUTPUT 2.3 rpm
428	402					1117	1117	2115	1248	1224	1725 rpm INPUT
428	402					1117	1117	2115	1248	1224	1000(D)
428	402					1117	1117	2115	1248	1224	
428	402					1117	1117	2115	1248	1224	OUTPUT 1.725 rpm
428	402					1117	1117	2115	1248	1224	1725 rpm INPUT
428	402					1117	1117	2115	1248	1224	1500(D)
428	402					1117	1117	2115	1248	1224	
428	402					1117	1117	2115	1248	1224	OUTPUT 1.15 rpm
428	402					1117	1117	2115	1248	1224	1725 rpm INPUT
428	402					1117	1117	2115	1248	1224	2000(D)
428	402					1117	1117	2115	1248	1224	
428	402					1117	1117	2115	1248	1224	OUTPUT .863 rpm
428	402					1117	1117	2115	1248	1224	1725 rpm INPUT
428	402					1117	1117	2115	1248	1224	3000(D)
428	402					1117	1117	2115	1248	1224	
428	402					1117	1117	2115	1248	1224	OUTPUT .575 rpm
428	402					1117	1117	2115	1248	1224	1725 rpm INPUT
428	402					1117	1117	2115	1248	1224	3600(D)
428	402					1117	1117	2115	1248	1224	
428	402					1117	1117	2115	1248	1224	OUTPUT .479 rpm

***Overhung Load given at one shaft diameter from housing or mounting flange.*

‡ O.H.L. based on maximum bore. Use of smaller diameter shaft may limit O.H.L.

† 4.625" from centerline.

5

DOUBLE AND TRIPLE REDUCTION REDUCER NO. 4

H Double Reduction Series Helical and Worm Gear
D Double Reduction Series Worm Gear
T Triple Reduction Series Worm Gear

All ratings stated are for A.G.M.A. Class 1 service.

HORSEPOWER TORQUE AND

OVERALL RATIO	INPUT SPEED R.P.M.	OUTPUT R.P.M.	RATIOS★ DOUBLE 1ST	RATIOS★ DOUBLE 2ND	RATIOS★ TRIPLE 3RD	INPUT H.P.	OUTPUT TORQUE INCH LBS.	GEARMOTOR H.P. @ 1800 / OUTPUT TORQUE INCH LBS.	CBX-CTX CVX-LX INPUT O.H.L.	CBD-CVD SFD-CTD LD INPUT O.H.L.	CTT-CVT SFT INPUT O.H.L.	CBD-CTD CBX-CTX CTT OUTPUT O.H.L.
1725 rpm INPUT 50(D) OUTPUT 34.5 rpm	1800	36.00	5	10		1.00	1139	1 / 1134		146		835
	1200	24.00				0.81	1335			146		835
	600	12.00				0.49	1475			146		835
	100	2.00				0.12	1453			146		835
1725 rpm INPUT 75(D) OUTPUT 23 rpm	1800	24.00	5	15		1.00	1553	1 / 1546		146		835
	1200	16.00				0.80	1785			146		835
	600	8.00				0.46	1785			146		835
	100	1.33				0.12	1778			146		835
1725 rpm INPUT 100(D) OUTPUT 17.25 rpm	1800	18.00	5	20		0.78	1475	3/4 / 1407		146		835
	1200	12.00				0.56	1475			146		835
	600	6.00				0.33	1475			146		835
	100	1.00				0.09	1475			146		835
1725 rpm INPUT 150(D) OUTPUT 11.5 rpm	1800	12.00	10	15		0.68	1720	3/4 / 1720 *		146		835
	1200	8.00				0.51	1785			146		835
	600	4.00				0.30	1785			146		835
	100	0.67				0.08	1785			146		835
1725 rpm INPUT 200(D) OUTPUT 8.625 rpm	1800	9.00	10	20		0.50	1475	1/2 / 1462		146		835
	1200	6.00				0.37	1475			146		835
	600	3.00				0.22	1475			146		835
	100	0.50				0.07	1475			146		835
1725 rpm INPUT 300(D) OUTPUT 5.75 rpm	1800	6.00	20	15		0.46	1652	1/2 / 1652 *		146		835
	1200	4.00				0.36	1785			146		835
	600	2.00				0.21	1785			146		835
	100	0.33				0.07	1738			146		835
1725 rpm INPUT 500(D) OUTPUT 3.45 rpm	1800	3.60	25	20		0.32	1475	1/3 / 1475 *		146		853
	1200	2.40				0.24	1475			146		835
	600	1.20				0.15	1475			146		835
	100	0.20				0.05	1475			146		835
1725 rpm INPUT 750(D) OUTPUT 2.3 rpm	1800	2.40	25	30		0.33	1785	1/3 / 1785 *		146		835
	1200	1.60				0.25	1785			146		835
	600	0.80				0.15	1785			146		835
	100	0.13				0.05	1785			146		835
1725 rpm INPUT 1000(D) OUTPUT 1.725 rpm	1800	1.80	25	40		0.26	1475	1/4 / 1325		146		835
	1200	1.20				0.20	1475			146		835
	600	0.60				0.12	1475			146		835
	100	0.10				0.04	1475			146		835
1725 rpm INPUT 1500(D) OUTPUT 1.15 rpm	1800	1.20	30	50		0.21	1380	1/4 / 1380 *		146		835
	1200	0.80				0.16	1380			146		835
	600	0.40				0.10	1380			146		835
	100	0.07				0.04	1380			146		835
1725 rpm INPUT 2000(D) OUTPUT .863 rpm	1800	0.90	40	50		0.21	1380	1/4 / 1380 *		146		835
	1200	0.60				0.16	1380			146		835
	600	0.30				0.10	1380			146		835
	100	0.05				0.04	1380			146		835
1725 rpm INPUT 3000(D) OUTPUT .575 rpm	1800	0.60	60	50		0.18	1380	1/6 / 984		146		835
	1200	0.40				0.15	1380			146		835
	600	0.20				0.09	1380			146		835
	100	0.03				0.03	1380			146		835
1725 rpm INPUT 3600(D) OUTPUT .479 rpm	1800	0.50	60	60		0.17	1137	1/6 / 1067		146		835
	1200	0.33				0.13	1137			146		835
	600	0.17				0.08	1137			146		835
	100	0.03				0.03	1137			146		835

★*Numbers shown in ( ) are exact ratios.*

**Motor H.P. exceeds reducer capacity. Output must be limited to torque shown.*

D Center Distance: Primary 1.333" Secondary 2.625"
Maximum NEMA Motor Frame Size: 56C Flange.

REDUCER NO.
4

OVERHUNG LOAD RATINGS

**OVERHUNG AND THRUST LOAD-SHAFTS (INCLUDES MOTORIZED WHERE APPLICABLE)

CVX — CVD CVT		LD - LX		LD - LX		CVX-CVD-CVT		SFD-SFT-STD			OVERALL RATIO
OUTPUT O.H.L.		OUTPUT O.H.L.									
UP	DOWN	UP	DOWN	OUTPUT THRUST DOWN	OUTPUT THRUST UP	OUTPUT THRUST DOWN	OUTPUT THRUST UP	OUTPUT THRUST TOWARDS BASE	OUTPUT THRUST AWAY FROM BASE	OUTPUT O.H.L. ‡ †	
835	749	835	775	1562	1632	1703	1632	2226	1740	1340	1725 rpm INPUT
835	749	835	775	1562	1632	1990	1632	2266	1740	1340	50(D)
835	749	835	775	1562	1632	2356	1632	2266	1740	1340	
835	749	835	775	1562	1632	2356	1632	2266	1740	1340	OUTPUT 34.5 rpm
835	749	835	775	1562	1632	2020	1632	2266	1740	1340	1725 rpm INPUT
835	749	835	775	1562	1632	2342	1632	2266	1740	1340	75(D)
835	749	835	775	1562	1632	2356	1632	2266	1740	1340	
835	749	835	775	1562	1632	2356	1632	2266	1740	1340	OUTPUT 23 rpm
835	749	835	775	1562	1632	2356	1632	2266	1740	1340	1725 rpm INPUT
835	749	835	775	1562	1632	2356	1632	2266	1740	1340	100(D)
835	749	835	775	1562	1632	2356	1632	2266	1740	1340	
835	749	835	775	1562	1632	2356	1632	2266	1740	1340	OUTPUT 17.25 rpm
835	749	835	775	1562	1632	2356	1632	2266	1740	1340	1725 rpm INPUT
835	749	835	775	1562	1632	2356	1632	2266	1740	1340	150(D)
835	749	835	775	1562	1632	2356	1632	2266	1740	1340	
835	749	835	775	1562	1632	2356	1632	2266	1740	1340	OUTPUT 11.5 rpm
835	749	835	775	1562	1632	2356	1632	2266	1740	1340	1725 rpm INPUT
835	749	835	775	1562	1632	2356	1632	2266	1740	1340	200(D)
835	749	835	775	1562	1632	2356	1632	2266	1740	1340	
835	749	835	775	1562	1632	2356	1632	2266	1740	1340	OUTPUT 8.625 rpm
835	749	835	775	1562	1632	2356	1632	2266	1740	1340	1725 rpm INPUT
835	749	835	775	1562	1632	2356	1632	2266	1740	1340	300(D)
835	749	835	775	1562	1632	2356	1632	2266	1740	1340	
835	749	835	775	1562	1632	2356	1632	2266	1740	1340	OUTPUT 5.75 rpm
835	749	835	775	1562	1632	2356	1632	2266	1740	1340	1725 rpm INPUT
835	749	835	775	1562	1632	2356	1632	2266	1740	1340	500(D)
835	749	835	775	1562	1632	2356	1632	2266	1740	1340	
835	749	835	775	1562	1632	2356	1632	2266	1740	1340	OUTPUT 3.45 rpm
835	749	835	775	1562	1632	2356	1632	2266	1740	1340	1725 rpm INPUT
835	749	835	775	1562	1632	2356	1632	2266	1740	1340	750(D)
835	749	835	775	1562	1632	2356	1632	2266	1740	1340	
835	749	835	775	1562	1632	2356	1632	2266	1740	1340	OUTPUT 2.3 rpm
835	749	835	775	1562	1632	2356	1632	2266	1740	1340	1725 rpm INPUT
835	749	835	775	1562	1632	2356	1632	2266	1740	1340	1000(D)
835	749	835	775	1562	1632	2356	1632	2266	1740	1340	
835	749	835	775	1562	1632	2356	1632	2266	1740	1340	OUTPUT 1.725 rpm
835	749	835	775	1562	1632	2356	1632	2266	1740	1340	1725 rpm INPUT
835	749	835	775	1562	1632	2356	1632	2266	1740	1340	1500(D)
835	749	835	775	1562	1632	2356	1632	2266	1740	1340	
835	749	835	775	1562	1632	2356	1632	2266	1740	1340	OUTPUT 1.15 rpm
835	749	835	775	1562	1632	2356	1632	2266	1740	1340	1725 rpm INPUT
835	749	835	775	1562	1632	2356	1632	2266	1740	1340	2000(D)
835	749	835	775	1562	1632	2356	1632	2266	1740	1340	
835	749	835	775	1562	1632	2356	1632	2266	1740	1340	OUTPUT .863 rpm
835	749	835	775	1562	1632	2356	1632	2266	1740	1340	1725 rpm INPUT
835	749	835	775	1562	1632	2356	1632	2266	1740	1340	3000(D)
835	749	835	775	1562	1632	2356	1632	2266	1740	1340	
835	749	835	775	1562	1632	2356	1632	2266	1740	1340	OUTPUT .575 rpm
835	749	835	775	1562	1632	2356	1632	2266	1740	1340	1725 rpm INPUT
835	749	835	775	1562	1632	2356	1632	2266	1740	1340	3600(D)
835	749	835	775	1562	1632	2356	1632	2266	1740	1340	
835	749	835	775	1562	1633	2356	1632	2266	1740	1340	OUTPUT .479 rpm

***Overhung Load given at one shaft diameter from housing or mounting flange.*

‡ O.H.L. based on maximum bore. Use of smaller diameter shaft may limit O.H.L.

† 5.3125" from centerline.

5

DOUBLE AND TRIPLE REDUCTION REDUCER NO. 5

H Double Reduction Series Helical and Worm Gear
D Double Reduction Series Worm Gear
T Triple Reduction Series Worm Gear

All ratings stated are for A.G.M.A. Class 1 service.

HORSEPOWER TORQUE AND

OVERALL RATIO	INPUT SPEED R.P.M.	OUTPUT R.P.M.	RATIOS★ DOUBLE 1ST	RATIOS★ DOUBLE 2ND	RATIOS★ TRIPLE 3RD	INPUT H.P.	OUTPUT TORQUE INCH LBS.	GEARMOTOR H.P. @ 1800 / OUTPUT TORQUE INCH LBS.	CBX-CTX CVX-LX INPUT O.H.L.	CBD-CVD SFD-CTD LD INPUT O.H.L.	CTT-CVT SFT INPUT O.H.L.	CBD-CTD CBX-CTX CTT OUTPUT O.H.L.
1725 rpm INPUT 50 (H) OUTPUT 34.5 rpm	1800	36.00	2	25		1.76	2192		230			1329
	1200	24.00				1.37	2471		230			1329
	600	12.00				0.84	2786		230			1329
	100	2.00				0.20	3078		230			1329
1725 rpm INPUT 50 (D) OUTPUT 34.5 rpm	1800	36.00	5	10 (10-1/3)		1.89	2430	2 / 2430 *		171		1329
	1200	24.00				1.39	2546			171		1329
	600	12.00				0.80	2667			171		1329
	100	2.00				0.20	2773			171		1329
1725 rpm INPUT 60 (H) OUTPUT 28.75 rpm	1800	30.00	2	30		1.51	2171		230			1329
	1200	20.00				1.17	2428		230			1329
	600	10.00				0.72	2714		230			1329
	100	1.67				0.175	2979		230			1329
1725 rpm INPUT 75 (H) OUTPUT 23.0 rpm	1800	24.00	3	25		1.37	2471		230			1329
	1200	16.00				1.04	2676		230			1329
	600	8.00				0.61	2899		230			1329
	100	1.33				0.15	3099		230			1329
1725 rpm INPUT 75 (D) OUTPUT 23 rpm	1800	24.00	5	15 (15-1/2)		1.47	2578	1-1/2 / 2578 *		171		1329
	1200	16.00				1.08	2697			171		1329
	600	8.00				0.63	2822			171		1329
	100	1.33				0.16	2930			171		1329
1725 rpm INPUT 80 (H) OUTPUT 21.56 rpm	1800	22.50	2	40		1.18	2105		230			1329
	1200	15.00				0.92	2330		230			1329
	600	7.50				0.57	2580		230			1329
	100	1.25				0.14	2715		230			1329
1725 rpm INPUT 90 (H) OUTPUT 19.17 rpm	1800	20.00	3	30		1.18	2428		230			1329
	1200	13.33				0.89	2615		230			1329
	600	6.67				0.56	2817		230			1329
	100	1.11				0.13	2997		230			1329
1725 rpm INPUT 100 (H) OUTPUT 17.25 rpm	1800	18.00	2	50		0.97	1995		230			1329
	1200	12.00				0.75	2195		230			1329
	600	6.00				0.46	2350		230			1329
	100	1.00				0.11	2350		230			1329
1725 rpm INPUT 100 (D) OUTPUT 17.25 rpm	1800	18.00	10	10 (10-1/3)		1.14	2606	1 / 2496		171		1329
	1200	12.00				0.83	2667			171		1329
	600	6.00				0.48	2730			171		1329
	100	1.00				0.12	2784			171		1329
1725 rpm INPUT 120 (H) OUTPUT 14.38 rpm	1800	15.00	2	60		0.81	1867		230			1329
	1200	10.00				0.63	2047		230			1329
	600	5.00				0.37	2056		230			1329
	100	0.83				0.09	2056		230			1329
1725 rpm INPUT 150 (H) OUTPUT 11.50 rpm	1800	12.00	3	50		0.75	2195		230			1329
	1200	8.00				0.57	2339		230			1329
	600	4.00				0.33	2350		230			1329
	100	0.67				0.08	2350		230			1329
1725 rpm INPUT 150 (D) OUTPUT 11.50 rpm	1800	12.00	10	15 (15-1/2)		0.91	2759	3/4 / 2544		171		1329
	1200	8.00				0.66	2822			171		1329
	600	4.00				0.39	2886			171		1329
	100	0.67				0.11	2941			171		1329
1725 rpm INPUT 180 (H) OUTPUT 9.58 rpm	1800	10.00	3	60		0.63	2047		230			1329
	1200	6.67				0.46	2056		230			1329
	600	3.33				0.27	2056		230			1329
	100	0.56				0.07	2056		230			1329

★*Numbers shown in ( ) are exact ratios.*

**Motor H.P. exceeds reducer capacity. Output must be limited to torque shown.*

H Center Distance: Primary (Helical) 1.875" Secondary (Worm) 3.000"
D Center Distance: Primary 2.000" Secondary 3.000"
Maximum NEMA Motor Frame Size: 184C - 145 TC Flange.
T Center Distance: Primary 1.333" Secondary 2.000" Third 3.000"
Maximum NEMA Motor Frame Size: 56C Flange.

REDUCER NO.
5

OVERHUNG LOAD RATINGS

**OVERHUNG AND THRUST LOAD-SHAFTS (INCLUDES MOTORIZED WHERE APPLICABLE)

CVX — CVD CVT		LD - LX		LD - LX		CVX-CVD-CVT		SFD-SFT-STD			OVERALL RATIO
OUTPUT O.H.L.		OUTPUT O.H.L.									
UP	DOWN	UP	DOWN	OUTPUT THRUST DOWN	OUTPUT THRUST UP	OUTPUT THRUST DOWN	OUTPUT THRUST UP	OUTPUT THRUST TOWARDS BASE	OUTPUT THRUST AWAY FROM BASE	OUTPUT O.H.L. ‡ †	
1329	1265	1329	1867	2160	2369	2379	2372				1725 rpm INPUT
1329	1265	1329	1867	2160	2669	2680	2673				50 (H)
1329	1265	1329	1867	2160	3024	2960	2960				
1329	1265	1329	1867	2160	3024	2960	2960				OUTPUT 34.5 rpm
1329	1265	1329	1867	2160	1996	1984	1973	2817	2817	2268	1725 rpm INPUT
1329	1265	1329	1867	2160	2300	2346	2335	2817	2817	2268	50 (D)
1329	1265	1329	1867	2160	3024	2960	2960	2817	2817	2268	
1329	1265	1329	1867	2160	3024	2960	2960	2817	2817	2268	OUTPUT 34.5 rpm
1329	1265	1329	1867	2160	2560	2570	2564				1725 rpm INPUT
1329	1265	1329	1867	2160	2887	2899	2891				60 (H)
1329	1265	1329	1867	2160	3024	2960	2960				
1329	1265	1329	1867	2160	3024	2960	2960				OUTPUT 28.75 rpm
1329	1265	1329	1867	2160	2669	2680	2673				1725 rpm INPUT
1329	1265	1329	1867	2160	3024	2960	2960				75 (H)
1329	1265	1329	1867	2160	3024	2960	2960				
1329	1265	1329	1867	2160	3024	2960	2960				OUTPUT 23.0 rpm
1329	1265	1329	1867	2160	2540	2549	2541	2817	2817	2268	1725 rpm INPUT
1329	1265	1329	1867	2160	3024	2960	2960	2817	2817	2268	75 (D)
1329	1265	1329	1867	2160	3024	2960	2960	2817	2817	2268	
1329	1265	1329	1867	2160	3024	2960	2960	2817	2817	2268	OUTPUT 23 rpm
1329	1265	1329	1867	2160	2880	2890	2885				1725 rpm INPUT
1329	1265	1329	1867	2160	3024	2960	2960				80 (H)
1329	1265	1329	1867	2160	3024	2960	2960				
1329	1265	1329	1867	2160	3024	2960	2960				OUTPUT 21.56 rpm
1329	1265	1329	1867	2160	3024	2898	2891				1725 rpm INPUT
1329	1265	1329	1867	2160	3024	2960	2960				90 (H)
1329	1265	1329	1867	2160	3024	2960	2960				
1329	1265	1329	1867	2160	3024	2960	2960				OUTPUT 19.17 rpm
1329	1265	1329	1867	2160	3024	2960	2960				1725 rpm INPUT
1329	1265	1329	1867	2160	3024	2960	2960				100 (H)
1329	1265	1329	1867	2160	3024	2960	2960				
1329	1265	1329	1867	2160	3024	2960	2960				OUTPUT 17.25 rpm
1329	1265	1329	1867	2160	3024	2960	2960	2817	2817	2268	1725 rpm INPUT
1329	1265	1329	1867	2160	3024	2960	2960	2817	2817	2268	100 (D)
1329	1265	1329	1867	2160	3024	2960	2960	2817	2817	2268	
1329	1265	1329	1867	2160	3024	2960	2960	2817	2817	2268	OUTPUT 17.25 rpm
1329	1265	1329	1867	2160	3024	2960	2960				1725 rpm INPUT
1329	1265	1329	1867	2160	3024	2960	2960				120 (H)
1329	1265	1329	1867	2160	3024	2960	2960				
1329	1265	1329	1867	2160	3024	2960	2960				OUTPUT 14.38 rpm
1329	1265	1329	1867	2160	3024	2960	2960				1725 rpm INPUT
1329	1265	1329	1867	2160	3024	2960	2960				150 (H)
1329	1265	1329	1867	2160	3024	2960	2960				
1329	1265	1329	1867	2160	3024	2960	2960				OUTPUT 11.50 rpm
1329	1265	1329	1867	2160	3024	2960	2960	2817	2817	2268	1725 rpm INPUT
1329	1265	1329	1867	2160	3024	2960	2960	2817	2817	2268	150 (D)
1329	1265	1329	1867	2160	3024	2960	2960	2817	2817	2268	
1329	1265	1329	1867	2160	3024	2960	2960	2817	2817	2268	OUTPUT 11.50 rpm
1329	1265	1329	1867	2160	3024	2960	2960				1725 rpm INPUT
1329	1265	1329	1867	2160	3024	2960	2960				180 (H)
1329	1265	1329	1867	2160	3024	2960	2960				
1329	1265	1329	1867	2160	3024	2960	2960				OUTPUT 9.58 rpm

***Overhung Load given at one shaft diameter from housing or mounting flange.*

‡ O.H.L. based on maximum bore. Use of smaller diameter shaft may limit O.H.L.

† 3" from centerline.

5

DOUBLE AND TRIPLE REDUCTION REDUCER NO. 5

H Double Reduction Series Helical and Worm Gear
D Double Reduction Series Worm Gear
T Triple Reduction Series Worm Gear

All ratings stated are for A.G.M.A. Class 1 service.

OVERALL RATIO	INPUT SPEED R.P.M.	OUTPUT R.P.M.	RATIOS★ DOUBLE 1ST	RATIOS★ DOUBLE 2ND	RATIOS★ TRIPLE 3RD	INPUT H.P.	OUTPUT TORQUE INCH LBS.	GEARMOTOR H.P. @ 1800 / OUTPUT TORQUE INCH LBS.	HORSEPOWER TORQUE AND: CBX-CTX CVX-LX INPUT O.H.L.	CBD-CVD SFD-CTD LD INPUT O.H.L.	CTT-CVT SFT INPUT O.H.L.	CBD-CTD CBX-CTX CTT OUTPUT O.H.L.
1725 rpm INPUT 200 (D) OUTPUT 8.62 rpm	1800	9.00	20	10 (10-1/3)		0.74	2699	3/4 2699 *		171		1329
	1200	6.00				0.55	2730			171		1329
	600	3.00				0.32	2762			171		1329
	100	0.50				0.09	2789			171		1329
1725 rpm INPUT 300 (D) OUTPUT 5.75 rpm	1800	6.00	10	30		0.64	2838	3/4 2838 *		171		1329
	1200	4.00				0.48	2902			171		1329
	600	2.00				0.30	2968			171		1329
	100	0.33				0.09	3024			171		1329
1725 rpm INPUT 500 (D) OUTPUT 3.45 rpm	1800	3.60	20	25		0.51	3029	1/2 2934		171		1329
	1200	2.40				0.39	3066			171		1329
	600	1.20				0.24	3103			171		1329
	100	0.20				0.08	3134			171		1329
1725 rpm INPUT 750 (D) OUTPUT 2.30 rpm	1800	2.40	30	25		0.42	3066	1/2 3066 *		171		1329
	1200	1.60				0.32	3091			171		1329
	600	0.80				0.20	3115			171		1329
	100	0.13				0.07	3136			171		1329
1725 rpm INPUT 1000 (D) OUTPUT 1.72 rpm	1800	1.80	40	25		0.39	3084	1/3 2385		171		1329
	1200	1.20				0.30	3103			171		1329
	600	0.60				0.19	3122			171		1329
	100	0.10				0.07	3137			171		1329
1725 rpm INPUT 1000 (T) OUTPUT 1.73 rpm	1800	1.80	10	10	10 (10-1/3)	0.31	2775	1/3 2775 *			146	1329
	1200	1.20				0.23	2781				146	1329
	600											
	100											
1725 rpm INPUT 1500 (D) OUTPUT 1.15 rpm	1800	1.20	60	25		0.33	3103	1/3 3103 *		171		1329
	1200	0.80				0.25	3115			171		1329
	600	0.40				0.17	3128			171		1329
	100	0.07				0.06	3138			171		1329
1725 rpm INPUT 1500 (T) OUTPUT 1.15 rpm	1800	1.20	5	10	30	0.31	2994	1/3 2994 *			146	1329
	1200	0.80				0.23	3008				146	1329
	600											
	100											
1725 rpm INPUT 2000 (D) OUTPUT .863 rpm	1800	0.900	50	40		0.275	2715	1/4 2147		171		1329
	1200	0.600				0.209	2715			171		1329
	600	0.300				0.139	2715			171		1329
	100	0.050				0.052	2715			171		1329
1725 rpm INPUT 2000 (T) OUTPUT .863 rpm	1800	0.900	20	10	10 (10-1/3)	0.243	2785	1/4 2785 *			146	1329
	1200	0.600				0.185	2788				146	1329
	600	0.300										
	100	0.050										
1725 rpm INPUT 3000 (D) OUTPUT .575 rpm	1800	0.600	60	50		0.236	2350	1/4 2350 *		171		1329
	1200	0.400				0.185	2350			171		1329
	600	0.200				0.124	2350			171		1329
	100	0.033				0.048	2350			171		1329
1725 rpm INPUT 3000 (T) OUTPUT .575 rpm	1800	0.600	10	10	30	0.240	3015	1/4 3015 *			146	1329
	1200	0.400				0.183	3021				146	1329
	600	0.200										
	100	0.033										
1725 rpm INPUT 3600 (D) OUTPUT .479 rpm	1800	0.500	60	60		0.219	2056	1/4 2056 *		171		1329
	1200	0.333				0.172	2056			171		1329
	600	0.167				0.116	2056			171		1329
	100	0.028				0.045	2056			171		1329

★*Numbers shown in ( ) are exact ratios.*

**Motor H.P. exceeds reducer capacity. Output must be limited to torque shown.*

H Center Distance: Primary (Helical) 1.875" Secondary (Worm) 3.000"
D Center Distance: Primary 2.000" Secondary 3.000"
Maximum NEMA Motor Frame Size: 184C - 145 TC Flange.
T Center Distance: Primary 1.333" Secondary 2.000" Third 3.000"
Maximum NEMA Motor Frame Size: 56C Flange.

REDUCER NO.
5

OVERHUNG LOAD RATINGS

**OVERHUNG AND THRUST LOAD-SHAFTS (INCLUDES MOTORIZED WHERE APPLICABLE)

CVX — CVD CVT		LD - LX		LD - LX		CVX-CVD-CVT		SFD-SFT-STD			OVERALL RATIO
OUTPUT O.H.L.		OUTPUT O.H.L.									
UP	DOWN	UP	DOWN	OUTPUT THRUST DOWN	OUTPUT THRUST UP	OUTPUT THRUST DOWN	OUTPUT THRUST UP	OUTPUT THRUST TOWARDS BASE	OUTPUT THRUST AWAY FROM BASE	OUTPUT O.H.L. ‡ †	
1329	1265	1329	1867	2160	3024	2960	2960	2817	2817	2268	1725 rpm INPUT 200 (D) OUTPUT 8.62 rpm
1329	1265	1329	1867	2160	3024	2960	2960	2817	2817	2268	
1329	1265	1329	1867	2160	3024	2960	2960	2817	2817	2268	
1329	1265	1329	1867	2160	3024	2960	2960	2817	2817	2268	
1329	1265	1329	1867	2160	3024	2960	2960	2817	2817	2268	1725 rpm INPUT 300 (D) OUTPUT 5.75 rpm
1329	1265	1329	1867	2160	3024	2960	2960	2817	2817	2268	
1329	1265	1329	1867	2160	3024	2960	2960	2817	2817	2268	
1329	1265	1329	1867	2160	3024	2960	2960	2817	2817	2268	
1329	1265	1329	1867	2160	3024	2960	2960	2817	2817	2268	1725 rpm INPUT 500 (D) OUTPUT 3.45 rpm
1329	1265	1329	1867	2160	3024	2960	2960	2817	2817	2268	
1329	1265	1329	1867	2160	3024	2960	2960	2817	2817	2268	
1329	1265	1329	1867	2160	3024	2960	2960	2817	2817	2268	
1329	1265	1329	1867	2160	3024	2960	2960	2817	2817	2268	1725 rpm INPUT 750 (D) OUTPUT 2.30 rpm
1329	1265	1329	1867	2160	3024	2960	2960	2817	2817	2268	
1329	1265	1329	1867	2160	3024	2960	2960	2817	2817	2268	
1329	1265	1329	1867	2160	3024	2960	2960	2817	2817	2268	
1329	1265	1329	1867	2160	3024	2960	2960	2817	2817	2268	1725 rpm INPUT 1000 (D) OUTPUT 1.72 rpm
1329	1265	1329	1867	2160	3024	2960	2960	2817	2817	2268	
1329	1265	1329	1867	2160	3024	2960	2960	2817	2817	2268	
1329	1265	1329	1867	2160	3024	2960	2960	2817	2817	2268	
1329	1265					2960	2960	2817	2817	2268	1725 rpm INPUT 1000 (T) OUTPUT 1.73 rpm
1329	1265					2960	2960	2817	2817	2268	
1329	1265	1329	1867	2160	3024	2960	2960	2817	2817	2268	1725 rpm INPUT 1500 (D) OUTPUT 1.15 rpm
1329	1265	1329	1867	2160	3024	2960	2960	2817	2817	2268	
1329	1265	1329	1867	2160	3024	2960	2960	2817	2817	2268	
1329	1265	1329	1867	2160	3024	2960	2960	2817	2817	2268	
1329	1265					2960	2960	2817	2817	2268	1725 rpm INPUT 1500 (T) OUTPUT 1.15 rpm
1329	1265					2960	2960	2817	2817	2268	
1329	1265	1329	1867	2160	3024	2960	2960	2817	2817	2268	1725 rpm INPUT 2000 (D) OUTPUT .863 rpm
1329	1265	1329	1867	2160	3024	2960	2960	2817	2817	2268	
1329	1265	1329	1867	2160	3024	2960	2960	2817	2817	2268	
1329	1265	1329	1867	2160	3024	2960	2960	2817	2817	2268	
1329	1265					2960	2960	2817	2817	2268	1725 rpm INPUT 2000 (T) OUTPUT .863 rpm
1329	1265					2960	2960	2817	2817	2268	
1329	1265	1329	1867	2160	3024	2960	2960	2817	2817	2268	1725 rpm INPUT 3000 (D) OUTPUT .575 rpm
1329	1265	1329	1867	2160	3024	2960	2960	2817	2817	2268	
1329	1265	1329	1867	2160	3024	2960	2960	2817	2817	2268	
1329	1265	1329	1867	2160	3024	2960	2960	2817	2817	2268	
1329	1265					2960	2960	2817	2817	2268	1725 rpm INPUT 3000 (T) OUTPUT .575 rpm
1329	1265					2960	2960	2817	2817	2268	
1329	1265	1329	1867	2160	3024	2960	2960	2817	2817	2268	1725 rpm INPUT 3600 (D) OUTPUT .479 rpm
1329	1265	1329	1867	2160	3024	2960	2960	2817	2817	2268	
1329	1265	1329	1867	2160	3024	2960	2960	2817	2817	2268	
1329	1265	1329	1867	2160	3024	2960	2960	2817	2817	2268	

***Overhung Load given at one shaft diameter from housing or mounting flange.*

‡ O.H.L. based on maximum bore. Use of smaller diameter shaft may limit O.H.L.

† 3" from centerline.

5

DOUBLE AND TRIPLE REDUCTION REDUCER NO. 5

H Double Reduction Series Helical and Worm Gear
D Double Reduction Series Worm Gear
T Triple Reduction Series Worm Gear

All ratings stated are for A.G.M.A. Class 1 service.

HORSEPOWER TORQUE AND

OVERALL RATIO	INPUT SPEED R.P.M.	OUTPUT R.P.M.	RATIOS★ DOUBLE 1ST	RATIOS★ DOUBLE 2ND	RATIOS★ TRIPLE 3RD	INPUT H.P.	OUTPUT TORQUE INCH LBS.	GEARMOTOR H.P. @ 1800 / OUTPUT TORQUE INCH LBS.	CBX-CTX CVX-LX INPUT O.H.L.	CBD-CVD SFD-CTD LD INPUT O.H.L.	CTT-CVT SFT INPUT O.H.L.	CBD-CTD CBX-CTX CTT OUTPUT O.H.L.
1725 rpm INPUT 5000 (T) OUTPUT .345 rpm	1800 1200 600 100	0.360 0.240 0.120 0.020	10	20	25	0.219 0.169	3129 3133	1/4 3129 *			146 146	1329 1329
1725 rpm INPUT 7500 (T) OUTPUT .230 rpm	1800 1200 600 100	0.240 0.160 0.080 0.013	15	20	25	0.193 0.150	3133 3135	1/4 3133 *			146 146	1329 1329
1725 rpm INPUT 10000 (T) OUTPUT .173 rpm	1800 1200 600 100	0.180 0.120 0.060 0.010	20	20	25	0.188 0.146	3135 3137	1/4 3135 *			146 146	1329 1329
1725 rpm INPUT 20000 (T) OUTPUT .086 rpm	1800 1200 600 100	0.090 0.060 0.030 0.005	40	20	25	0.175 0.133	3138 3139	1/6 2936			146 146	1329 1329
1725 rpm INPUT 30000 (T) OUTPUT .058 rpm	1800 1200 600 100	0.060 0.040 0.020 0.003	40	30	25	0.168 0.128	3139 3139	1/6 3139 *			146 146	1329 1329
1725 rpm INPUT 40000 (T) OUTPUT .043 rpm	1800 1200 600 100	0.045 0.030 0.015 0.003	40	40	25	0.168 0.129	3139 3139	1/6 3139 *			146 146	1329 1329
1725 rpm INPUT 50000 (T) OUTPUT .035 rpm	1800 1200 600 100	0.036 0.024 0.012 0.002	50	40	25	0.168 0.129	3139 3140	1/6 3139 *			146 146	1329 1329
1725 rpm INPUT 60000 (T) OUTPUT .029 rpm	1800 1200 600 100	0.030 0.020 0.010 0.002	60	40	25	0.153 0.117	3139 3140	1/6 3139 *			146 146	1329 1329
1725 rpm INPUT 75000 (T) OUTPUT .023 rpm	1800 1200 600 100	0.024 0.016 0.008 0.001	60	50	25	0.148 0.113	3140 3140	1/6 3140 *			146 146	1329 1329
1725 rpm INPUT 80000 (T) OUTPUT .022 rpm	1800 1200 600 100	0.023 0.015 0.008 0.001	40	50	40	0.153 0.116	2715 2715	1/6 2715 *			146 146	1329 1329
1725 rpm INPUT 90000 (T) OUTPUT .019 rpm	1800 1200 600 100	0.020 0.013 0.007 0.001	60	50	30	0.145 0.110	3034 3034	1/6 3034 *			146 146	1329 1329
1725 rpm INPUT 100000 (T) OUTPUT .017 rpm	1800 1200 600 100	0.018 0.012 0.006 0.001	50	50	40	0.152 0.116	2715 2715	1/6 2715 *			146 146	1329 1329
1725 rpm INPUT 150000 (T) OUTPUT .012 rpm	1800 1200 600 100	0.012 0.008 0.004 0.001	50	60	50	0.149 0.113	2350 2350	1/6 2350 *			146 146	1329 1329
1725 rpm INPUT 180000 (T) OUTPUT .010 rpm	1800 1200 600 100	0.010 0.007 0.003 0.001	60	60	50	0.138 0.104	2350 2350	1/6 2350 *			146 146	1329 1329

★*Numbers shown in ( ) are exact ratios.*

**Motor H.P. exceeds reducer capacity. Output must be limited to torque shown.*

H Center Distance: Primary (Helical) 1.875" Secondary (Worm) 3.000"
D Center Distance: Primary 2.000" Secondary 3.000"
Maximum NEMA Motor Frame Size: 184C - 145 TC Flange.
T Center Distance: Primary 1.333" Secondary 2.000" Third 3.000"
Maximum NEMA Motor Frame Size: 56C Flange.

REDUCER NO.
5

OVERHUNG LOAD RATINGS

**OVERHUNG AND THRUST LOAD-SHAFTS (INCLUDES MOTORIZED WHERE APPLICABLE)

CVX — CVD CVT		LD - LX		LD - LX		CVX-CVD-CVT		SFD-SFT-STD			OVERALL RATIO
OUTPUT O.H.L.		OUTPUT O.H.L.									
UP	DOWN	UP	DOWN	OUTPUT THRUST DOWN	OUTPUT THRUST UP	OUTPUT THRUST DOWN	OUTPUT THRUST UP	OUTPUT THRUST TOWARDS BASE	OUTPUT THRUST AWAY FROM BASE	OUTPUT O.H.L. ‡ †	
1329 1329	1265 1265					2960 2960	2960 2960	2817 2817	2817 2817	2268 2268	1725 rpm INPUT 5000 (T) OUTPUT .345 rpm
1329 1329	1265 1265					2960 2960	2960 2960	2817 2817	2817 2817	2268 2268	1725 rpm INPUT 7500 (T) OUTPUT .230 rpm
1329 1329	1265 1265					2960 2960	2960 2960	2817 2817	2817 2817	2268 2268	1725 rpm INPUT 10000 (T) OUTPUT .173 rpm
1329 1329	1265 1265					2960 2960	2960 2960	2817 2817	2817 2817	2268 2268	1725 rpm INPUT 20000 (T) OUTPUT .086 rpm
1329 1329	1265 1265					2960 2960	2960 2960	2817 2817	2817 2817	2268 2268	1725 rpm INPUT 30000 (T) OUTPUT .058 rpm
1329 1329	1265 1265					2960 2960	2960 2960	2817 2817	2817 2817	2268 2268	1725 rpm INPUT 40000 (T) OUTPUT .043 rpm
1329 1329	1265 1265					2960 2960	2960 2960	2817 2817	2817 2817	2268 2268	1725 rpm INPUT 50000 (T) OUTPUT .035 rpm
1329 1329	1265 1265					2960 2960	2960 2960	2817 2817	2817 2817	2268 2268	1725 rpm INPUT 60000 (T) OUTPUT .029 rpm
1329 1329	1265 1265					2960 2960	2960 2960	2817 2817	2817 2817	2268 2268	1725 rpm INPUT 75000 (T) OUTPUT .023 rpm
1329 1329	1265 1265					2960 2960	2960 2960	2817 2817	2817 2817	2268 2268	1725 rpm INPUT 80000 (T) OUTPUT .022 rpm
1329 1329	1265 1265					2960 2960	2960 2960	2817 2817	2817 2817	2268 2268	1725 rpm INPUT 90000 (T) OUTPUT .019 rpm
1329 1329	1265 1265					2960 2960	2960 2960	2817 2817	2817 2817	2268 2268	1725 rpm INPUT 100000 (T) OUTPUT .017 rpm
1329 1329	1265 1265					2960 2960	2960 2960	2817 2817	2817 2817	2268 2268	1725 rpm INPUT 150000 (T) OUTPUT .012 rpm
1329 1329	1265 1265					2960 2960	2960 2960	2817 2817	2817 2817	2268 2268	1725 rpm INPUT 180000 (T) OUTPUT .010 rpm

***Overhung Load given at one shaft diameter from housing or mounting flange.*

‡ O.H.L. based on maximum bore. Use of smaller diameter shaft may limit O.H.L.

† 3" from centerline.

5

DOUBLE AND TRIPLE REDUCTION REDUCER NO. 6

H Double Reduction Series Helical and Worm Gear
D Double Reduction Series Worm Gear
T Triple Reduction Series Worm Gear

All ratings stated are for A.G.M.A. Class 1 service.

HORSEPOWER TORQUE AND

OVERALL RATIO	INPUT SPEED R.P.M.	OUTPUT R.P.M.	RATIOS★ DOUBLE 1ST	RATIOS★ DOUBLE 2ND	RATIOS★ TRIPLE 3RD	INPUT H.P.	OUTPUT TORQUE INCH LBS.	GEARMOTOR H.P. @ 1800 / OUTPUT TORQUE INCH LBS.	CBX-CTX CVX-LX INPUT O.H.L.	CBD-CVD SFD-CTD LD INPUT O.H.L.	CTT-CVT SFT INPUT O.H.L.	CBD-CTD CBX-CTX CTT OUTPUT O.H.L.
1725 rpm INPUT 50 (H) OUTPUT 34.5 rpm	1800	36.00	2	25		2.53	3048		230			1391
	1200	24.00				2.12	3678		230			1391
	600	12.00				1.40	4439		230			1391
	100	2.00				0.34	4804		230			1391
1725 rpm INPUT 50 (D) OUTPUT rpm	1800	36.00	5	10 (10-1/3)		2.34	2975	2 / 2491		171		1391
	1200	24.00				1.97	3632			171		1391
	600	12.00				1.21	4075			171		1391
	100	2.00				0.29	4075			171		1391
1725 rpm INPUT 60 (H) OUTPUT 28.75 rpm	1800	30.00	2	30		2.24	3124		230			1391
	1200	20.00				1.85	3716		230			1391
	600	10.00				1.12	4075		230			1391
	100	1.67				0.26	4075		230			1391
1725 rpm INPUT 75 (H) OUTPUT 23.00 rpm	1800	24.00	3	25		2.12	3678		230			1391
	1200	16.00				1.68	4169		230			1391
	600	8.00				1.05	4726		230			1391
	100	1.33				0.24	4804		230			1391
1725 rpm INPUT 75 (D) OUTPUT 23.00 rpm	1800	24.00	5	15		2.34	4061	2 / 3401		171		1391
	1200	16.00				1.67	4075			171		1391
	600	8.00				0.94	4075			171		1391
	100	1.33				0.23	4075			171		1391
1725 rpm INPUT 80 (H) OUTPUT 21.56 rpm	1800	22.50	2	40		1.72	3128		230			1391
	1200	15.00				1.37	3563		230			1391
	600	7.50				0.78	3600		230			1391
	100	1.25				0.18	3600		230			1391
1725 rpm INPUT 90 (H) OUTPUT 19.17 rpm	1800	20.00	3	30		1.85	3716		230			1391
	1200	13.33				1.43	4075		230			1391
	600	6.67				0.80	4075		230			1391
	100	1.11				0.19	4075		230			1391
1725 rpm INPUT 100 (H) OUTPUT 17.25 rpm	1800	18.00	2	50		1.43	3000		230			1391
	1200	12.00				1.02	3000		230			1391
	600	6.00				0.59	3000		230			1391
	100	1.00				0.15	3000		230			1391
1725 rpm INPUT 100 (D) OUTPUT 17.2 rpm	1800	18.00	10	10 (10-1/3)		1.66	3855	1-1/2 / 3427		171		1391
	1200	12.00				1.24	4075			171		1391
	600	6.00				0.70	4075			171		1391
	100	1.00				0.18	4075			171		1391
1725 rpm INPUT 120 (H) OUTPUT 14.38 rpm	1800	15.00	2	60		1.34	2825		230			1391
	1200	10.00				0.98	2850		230			1391
	600	5.00				0.58	2850		230			1391
	100	0.83				0.15	2850		230			1391
1725 rpm INPUT 150 (H) OUTPUT 11.50 rpm	1800	12.00	3	50		1.02	3000		230			1391
	1200	8.00				0.74	3000		230			1391
	600	4.00				0.43	3000		230			1391
	100	0.67				0.11	3000		230			1391
1725 rpm INPUT 150 (D) OUTPUT 11.50 rpm	1800	12.00	10	15		1.34	4075	1-1/2 / 4075 *		171		1391
	1200	8.00				0.97	4075			171		1391
	600	4.00				0.56	4075			171		1391
	100	0.67				0.15	4075			171		1391
1725 rpm INPUT 180 (H) OUTPUT 9.58 rpm	1800	10.00	3	60		0.98	2850		230			1391
	1200	6.67				0.72	2850		230			1391
	600	3.33				0.43	2850		230			1391
	100	0.56				0.11	2850		230			1391

★*Numbers shown in ( ) are exact ratios.*

**Motor H.P. exceeds reducer capacity. Output must be limited to torque shown.*

H Center Distance: Primary (Helical) 1.875" Secondary (Worm) 3.500"
D Center Distance: Primary 2.000" Secondary 3.500"
Maximum NEMA Motor Frame Size: 184C - 145TC Flange.
T Center Distance: Primary 1.333" Secondary 2.000" Third 3.500"
Maximum NEMA Motor Frame Size: 56C Flange.

REDUCER NO. 6

OVERHUNG LOAD RATINGS

**OVERHUNG AND THRUST LOAD-SHAFTS (INCLUDES MOTORIZED WHERE APPLICABLE)

CVX — CVD CVT		LD - LX		LD - LX		CVX-CVD-CVT		SFD-SFT-STD			OVERALL RATIO
OUTPUT O.H.L.		OUTPUT O.H.L.									
UP	DOWN	UP	DOWN	OUTPUT THRUST DOWN	OUTPUT THRUST UP	OUTPUT THRUST DOWN	OUTPUT THRUST UP	OUTPUT THRUST TOWARDS BASE	OUTPUT THRUST AWAY FROM BASE	OUTPUT O.H.L. ‡ †	
1391	1309	2089	2532	2176	2765	2778	2776				1725 rpm INPUT
1391	1309	2089	2532	2176	3024	3085	3024				50 (H)
1391	1309	2089	2532	2176	3024	3385	3024				
1391	1309	2089	2532	2176	3024	3385	3024				OUTPUT 34.5 rpm
1391	1309	2089	2532	2176	2486	2484	2482	3920	3024	2268	1725 rpm INPUT
1391	1309	2089	2532	2176	2915	2913	2911	3920	3024	2268	50 (D)
1391	1309	2089	2532	2176	3024	3385	3024	3920	3024	2268	
1391	1309	2089	2532	2176	3024	3385	3024	3920	3024	2268	OUTPUT 34.5 rpm
1391	1309	2089	2532	2176	2995	2968	2966				1725 rpm INPUT
1391	1309	2089	2532	2176	3024	3385	3024				60 (H)
1391	1309	2089	2532	2176	3024	3385	3024				
1391	1309	2089	2532	2176	3024	3385	3024				OUTPUT 28.75 rpm
1391	1309	2089	2532	2176	3024	3080	3024				1725 rpm INPUT
1391	1309	2089	2532	2176	3024	3385	3024				75 (H)
1391	1309	2089	2532	2176	3024	3385	3024				
1391	1309	2089	2532	2176	3024	3385	3024				OUTPUT 23.00 rpm
1391	1309	2089	2532	2176	3024	3011	3009	3920	3024	2268	1725 rpm INPUT
1391	1309	2089	2532	2176	3024	3385	3024	3920	3024	2268	75 (D)
1391	1309	2089	2532	2176	3024	3385	3024	3920	3024	2268	
1391	1309	2089	2532	2176	3024	3385	3024	3920	3024	2268	OUTPUT 23.00 rpm
1391	1309	2089	2532	2176	3024	3385	3024				1725 rpm INPUT
1391	1309	2089	2532	2176	3024	3385	3024				80 (H)
1391	1309	2089	2532	2176	3024	3385	3024				
1391	1309	2089	2532	2176	3024	3385	3024				OUTPUT 21.56 rpm
1391	1309	2089	2532	2176	3024	3385	3024				1725 rpm INPUT
1391	1309	2089	2532	2176	3024	3385	3024				90 (H)
1391	1309	2089	2532	2176	3024	3385	3024				
1391	1309	2089	2532	2176	3024	3385	3024				OUTPUT 19.17 rpm
1391	1309	2089	2532	2176	3024	3385	3024				1725 rpm INPUT
1391	1309	2089	2532	2176	3024	3385	3024				100 (H)
1391	1309	2089	2532	2176	3024	3385	3024				
1391	1309	2089	2532	2176	3024	3385	3024				OUTPUT 17.25 rpm
1391	1309	2089	2532	2176	3024	3385	3024	3920	3024	2268	1725 rpm INPUT
1391	1309	2089	2532	2176	3024	3385	3024	3920	3024	2268	100 (D)
1391	1309	2089	2532	2176	3024	3385	3024	3920	3024	2268	
1391	1309	2089	2532	2176	3024	3385	3024	3920	3024	2668	OUTPUT 17.25 rpm
1391	1309	2089	2532	2176	3024	3385	3024				1725 rpm INPUT
1391	1309	2089	2532	2176	3024	3385	3024				120 (H)
1391	1309	2089	2532	2176	3024	3385	3024				
1391	1309	2089	2532	2176	3024	3385	3024				OUTPUT 14.38 rpm
1391	1309	2089	2532	2176	3024	3385	3024				1725 rpm INPUT
1391	1309	2089	2532	2176	3024	3385	3024				150 (H)
1391	1309	2089	2532	2176	3024	3385	3024				
1391	1309	2089	2532	2176	3024	3385	3024				OUTPUT 11.50 rpm
1391	1309	2089	2532	2176	3024	3385	3024	3920	3024	2268	1725 rpm INPUT
1391	1309	2089	2532	2176	3024	3385	3024	3920	3024	2268	150 (D)
1391	1309	2089	2532	2176	3024	3385	3024	3920	3024	2268	
1391	1309	2089	2532	2176	3024	3385	3024	3920	3024	2268	OUTPUT 11.50 rpm
1391	1309	2089	2532	2176	3024	3385	3024				1725 rpm INPU
1391	1309	2089	2532	2176	3024	3385	3024				180 (H)
1391	1309	2089	2532	2176	3024	3385	3024				
1391	1309	2089	2532	2176	3024	3385	3024				OUTPUT 9.58 rpm

***Overhung Load given at one shaft diameter from housing or mounting flange.*

‡ O.H.L. based on maximum bore. Use of smaller diameter shaft may limit O.H.L.

† 6.6875" from centerline.

5

DOUBLE AND TRIPLE REDUCTION REDUCER NO. 6

H Double Reduction Series Helical and Worm Gear
D Double Reduction Series Worm Gear
T Triple Reduction Series Worm Gear

All ratings stated are for A.G.M.A. Class 1 service.

HORSEPOWER TORQUE AND

OVERALL RATIO	INPUT SPEED R.P.M.	OUTPUT R.P.M.	RATIOS★ DOUBLE 1ST	RATIOS★ DOUBLE 2ND	RATIOS★ TRIPLE 3RD	INPUT H.P.	OUTPUT TORQUE INCH LBS.	GEARMOTOR H.P. @ 1800 / OUTPUT TORQUE INCH LBS.	CBX-CTX CVX-LX INPUT O.H.L.	CBD-CVD SFD-CTD LD INPUT O.H.L.	CTT-CVT SFT INPUT O.H.L.	CBD-CTD CBX-CTX CTT OUTPUT O.H.L.
1725 rpm INPUT 200 (D) OUTPUT 8.63 rpm	1800	9.00	20	10 (10-1/3)		1.02	3791	1 / 3692		171		1391
	1200	6.00				0.78	4075			171		1391
	600	3.00				0.46	4075			171		1391
	100	0.50				0.13	4075			171		1391
1725 rpm INPUT 300 (D) OUTPUT 5.75 rpm	1800	6.00	20	15		0.86	4075	1 / 4075 *		171		1391
	1200	4.00				0.63	4075			171		1391
	600	2.00				0.38	4075			171		1391
	100	0.33				0.12	4075			171		1391
1725 rpm INPUT 500 (D) OUTPUT 3.45 rpm	1800	3.60	20	25		0.78	4804	3/4 / 4581		171		1391
	1200	2.40				0.58	4804			171		1391
	600	1.20				0.36	4804			171		1391
	100	0.20				0.12	4804			171		1391
1725 rpm INPUT 750 (D) OUTPUT 2.30 rpm	1800	2.40	30	25		0.62	4804	3/4 / 4804 *		171		1391
	1200	1.60				0.47	4804			171		1391
	600	0.80				0.30	4804			171		1391
	100	0.13				0.10	4804			171		1391
1725 rpm INPUT 1000 (D) OUTPUT 1.73 rpm	1800	1.80	40	25		0.56	4804	1/2 / 4046		171		1391
	1200	1.20				0.43	4804			171		1391
	600	0.60				0.28	4804			171		1391
	100	0.10				0.10	4804			171		1391
1725 rpm INPUT 1000 (T) OUTPUT 1.73 rpm	1800	1.80	10	10	10 (10-1/3)	0.397	4075	1/2 / 4075 *			146	1391
	1200	1.20				0.298	4075				146	1391
	600											
	100											
1725 rpm INPUT 1500 (D) OUTPUT 1.15 rpm	1800	1.20	50	30		0.40	4075	1/2 / 4075 *		171		1391
	1200	0.80				0.31	4075			171		1391
	600	0.40				0.20	4075			171		1391
	100					0.07	4075			171		1391
1725 rpm INPUT 1500 (T) OUTPUT 1.15 rpm	1800	1.20	15	10	10 (10-1/3)	0.290	4075	1/3 / 4075 *			146	1391
	1200	0.80				0.216	4075				146	1391
	600											
	100											
1725 rpm INPUT 2000 (D) OUTPUT .863 rpm	1800	0.900	50	40		0.322	3600	1/3 / 3600 *		171		1391
	1200	0.600				0.249	3600			171		1391
	600	0.300				0.164	3600			171		1391
	100					0.060	3600			171		1391
1725 rpm INPUT 2000 (T) OUTPUT .863 rpm	1800	0.900	20	10	10 (10-1/3)	0.302	4075	1/3 / 4075 *			146	1391
	1200	0.600				0.230	4075				146	1391
	600											
	100											
1725 rpm INPUT 3000 (D) OUTPUT .575 rpm	1800	0.600	60	50		0.273	3000	1/4 / 2379		171		1391
	1200	0.400				0.214	3000			171		1391
	600	0.200				0.143	3000			171		1391
	100					0.054	3000			171		1391
1725 rpm INPUT 3000 (T) OUTPUT .575 rpm	1800	0.600	20	10	15	0.269	4075	1/4 / 3418			146	1391
	1200	0.400				0.206	4075				146	1391
	600											
	100											
1725 rpm INPUT 3600 (D) OUTPUT .479 rpm	1800	0.500	60	60		0.283	2850	1/4 / 2086		171		1391
	1200	0.333				0.223	2850			171		1391
	600	0.167				0.150	2850			171		1391
	100	0.028				0.050	2850			171		1391

★*Numbers shown in ( ) are exact ratios.*

**Motor H.P. exceeds reducer capacity. Output must be limited to torque shown.*

H Center Distance: Primary (Helical) 1.875" Secondary (Worm) 3.500"
D Center Distance: Primary 2.000" Secondary 3.500"
Maximum NEMA Motor Frame Size: 184C - 145TC Flange.
T Center Distance: Primary 1.333" Secondary 2.000" Third 3.500"
Maximum NEMA Motor Frame Size: 56C Flange.

REDUCER NO. 6

OVERHUNG LOAD RATINGS

**OVERHUNG AND THRUST LOAD-SHAFTS (INCLUDES MOTORIZED WHERE APPLICABLE)

CVX — CVD CVT		LD - LX		LD - LX		CVX-CVD-CVT		SFD-SFT-STD			OVERALL RATIO
OUTPUT O.H.L.		OUTPUT O.H.L.									
UP	DOWN	UP	DOWN	OUTPUT THRUST DOWN	OUTPUT THRUST UP	OUTPUT THRUST DOWN	OUTPUT THRUST UP	OUTPUT THRUST TOWARDS BASE	OUTPUT THRUST AWAY FROM BASE	OUTPUT O.H.L. ‡ †	
1391	1309	2089	2532	2176	3024	3385	3024	3920	3024	2268	1725 rpm INPUT 200 (D) OUTPUT **8.63** rpm
1391	1309	2089	2532	2176	3024	3385	3024	3920	3024	2268	
1391	1309	2089	2532	2176	3024	3385	3024	3920	3024	2268	
1391	1309	2089	2532	2176	3024	3385	3024	3920	3024	2268	
1391	1309	2089	2532	2176	3024	3385	3024	3920	3024	2268	1725 rpm INPUT 300 (D) OUTPUT 5.75 rpm
1391	1309	2089	2532	2176	3024	3385	3024	3920	3024	2268	
1391	1309	2089	2532	2176	3024	3385	3024	3920	3024	2268	
1391	1309	2089	2532	2176	3024	3385	3024	3920	3024	2268	1725 rpm INPUT 500 (D) OUTPUT 3.45 rpm
1391	1309	2089	2532	2176	3024	3385	3024	3920	3024	2268	
1391	1309	2089	2532	2176	3024	3385	3024	3920	3024	2268	
1391	1309	2089	2532	2176	3024	3385	3024	3920	3024	2268	1725 rpm INPUT 750 (D) OUTPUT 2.30 rpm
1391	1309	2089	2532	2176	3024	3385	3024	3920	3024	2268	
1391	1309	2089	2532	2176	3024	3385	3024	3920	3024	2268	
1391	1309	2089	2532	2176	3024	3385	3024	3920	3024	2268	1725 rpm INPUT 1000 (D) OUTPUT 1.73 rpm
1391	1309	2089	2532	2176	3024	3385	3024	3920	3024	2268	
1391	1309	2089	2532	2176	3024	3385	3024	3920	3024	2268	
1391	1309					3385	3024	3920	3024	2268	1725 rpm INPUT 1000 (T) OUTPUT **1.73** rpm
1391	1309					3385	3024	3920	3024	2268	
1391	1309	2089	2532	2176	3024	3385	3024	3920	3024	2268	1725 rpm INPUT 1500 (D) OUTPUT 1.15 rpm
1391	1309	2089	2532	2176	3024	3385	3024	3920	3024	2268	
1391	1309	2089	2532	2176	3024	3385	3024	3920	3024	2268	
1391	1309	2089	2532	2176	3024	3385	3024	3920	3024	2268	
1391	1309					3385	3024	3920	3024	2268	1725 rpm INPUT 1500 (T) OUTPUT **1.15** rpm
1391	1309					3385	3024	3920	3024	2268	
1391	1309	2089	2532	2176	3024	3385	3024	3920	3024	2268	1725 rpm INPUT 2000 (D) OUTPUT .863 rpm
1391	1309	2089	2532	2176	3024	3385	3024	3920	3024	2268	
1391	1309	2089	2532	2176	3024	3385	3024	3920	3024	2268	
1391	1309	2089		2176	3024	3385	3024	3920	3024	2268	
1391	1309					3385	3024	3920	3024	2268	1725 rpm INPUT 2000 (T) OUTPUT **.863** rpm
1391	1309					3385	3024	3920	3024	2268	
1391	1309	2089	2532	2176	3024	3385	3024	3920	3024	2268	1725 rpm INPUT 3000 (D) OUTPUT .575 rpm
1391	1309	2089	2532	2176	3024	3385	3024	3920	3024	2268	
1391	1309	2089	2532	2176	3024	3385	3024	3920	3024	2268	
1391	1309	2089	2532	2176	3024	3385	3024	3920	3024	2268	
1391	1309					3385	3024	3920	3024	2268	1725 rpm INPUT 3000 (T) OUTPUT .575 rpm
1391	1309					3385	3024	3920	3024	2268	
1391	1309	2089	2532	2176	3024	3385	3024	3920	3024	2268	1725 rpm INPUT 3600 (D) OUTPUT .479 rpm
1391	1309	2089	2532	2176	3024	3385	3024	3920	3024	2268	
1391	1309	2089	2532	2176	3024	3385	3024	3920	3024	2268	
1391	1309	2089	2532	2176	3024	3385	3024	3920	3024	2268	

***Overhung Load given at one shaft diameter from housing or mounting flange.*

‡ O.H.L. based on maximum bore. Use of smaller diameter shaft may limit O.H.L.

† 6.6875" from centerline.

5

DOUBLE AND TRIPLE REDUCTION REDUCER NO. 6

H Double Reduction Series Helical and Worm Gear
D Double Reduction Series Worm Gear
T Triple Reduction Series Worm Gear

All ratings stated are for A.G.M.A. Class 1 service.

HORSEPOWER TORQUE AND

OVERALL RATIO	INPUT SPEED R.P.M.	OUTPUT R.P.M.	RATIOS★ DOUBLE 1ST	RATIOS★ DOUBLE 2ND	RATIOS★ TRIPLE 3RD	INPUT H.P.	OUTPUT TORQUE INCH LBS.	GEARMOTOR H.P. @ 1800 / OUTPUT TORQUE INCH LBS.	CBX-CTX CVX-LX INPUT O.H.L.	CBD-CVD SFD-CTD LD INPUT O.H.L.	CTT-CVT SFT INPUT O.H.L.	CBD-CTD CBX-CTX CTT OUTPUT O.H.L.
1725 rpm INPUT 5000 (T) OUTPUT .345 rpm	1800 1200 600 100	0.360 0.240	10	20	25	0.271 0.209	4804 4804	1/4 3895			146 146	1391 1391
1725 rpm INPUT 7500 (T) OUTPUT .230 rpm	1800 1200 600 100	0.240 0.160	15	20	25	0.234 0.182	4804 4804	1/4 4804 *			146 146	1391 1391
1725 rpm INPUT 10000 (T) OUTPUT .173 rpm	1800 1200 600 100	0.180 0.120	20	20	25	0.226 0.177	4804 4804	1/4 4804 *			146 146	1391 1391
1725 rpm INPUT 20000 (T) OUTPUT .086 rpm	1800 1200 600 100	0.090 0.060	40	20	25	0.206 0.160	4804 4804	1/4 4804 *			146 146	1391 1391
1725 rpm INPUT 30000 (T) OUTPUT .058 rpm	1800 1200 600 100	0.060 0.040	40	30	25	0.194 0.151	4804 4804	1/6 3004			146 146	1391 1391
1725 rpm INPUT 40000 (T) OUTPUT .043 rpm	1800 1200 600 100	0.045 0.030	40	40	25	0.195 0.150	4804 4586	1/6 3090			146 146	1391 1391
1725 rpm INPUT 50000 (T) OUTPUT .035 rpm	1800 1200 600 100	0.036 0.024	50	40	25	0.196 0.149	4804 4312	1/6 3147			146 146	1391 1391
1725 rpm INPUT 60000 (T) OUTPUT .029 rpm	1800 1200 600 100	0.030 0.020	40	50	30	0.173 0.133	4075 4075	1/6 4075			146 146	1391 1391
1725 rpm INPUT 75000 (T) OUTPUT .023 rpm	1800 1200 600 100	0.024 0.016	50	50	30	0.173 0.135	4075 4075	1/6 4075			146 146	1391 1391
1725 rpm INPUT 80000 (T) OUTPUT .022 rpm	1800 1200 600 100	0.023 0.015	40	50	40	0.161 0.123	3600 3600	1/6 3600 *			146 146	1391 1391
1725 rpm INPUT 90000 (T) OUTPUT .019 rpm	1800 1200 600 100	0.020 0.013	60	50	30	0.158 0.121	4075 3924	1/6 4075 *			146 146	1391 1391
1725 rpm INPUT 100000 (T) OUTPUT .017 rpm	1800 1200 600 100	0.018 0.012	50	50	40	0.160 0.123	3600 3600	1/6 3600 *			146 146	1391 1391
1725 rpm INPUT 150000 (T) OUTPUT .012 rpm	1800 1200 600 100	0.012 0.008	50	60	50	0.155 0.119	3000 3000	1/6 3000 *			146 146	1391 1391
1725 rpm INPUT 180000 (T) OUTPUT .010 rpm	1800 1200 600 100	0.010 0.007	60	60	50	0.143 0.109	3000 3000	1/6 3000 *			146 146	1391 1391

★*Numbers shown in ( ) are exact ratios.*

**Motor H.P. exceeds reducer capacity. Output must be limited to torque shown.*

H Center Distance: Primary (Helical) 1.875" Secondary (Worm) 3.500"
D Center Distance: Primary 2.000" Secondary 3.500"
Maximum NEMA Motor Frame Size: 184C - 145TC Flange.
T Center Distance: Primary 1.333" Secondary 2.000" Third 3.500"
Maximum NEMA Motor Frame Size: 56C Flange.

REDUCER NO. 6

OVERHUNG LOAD RATINGS

**OVERHUNG AND THRUST LOAD-SHAFTS (INCLUDES MOTORIZED WHERE APPLICABLE)

CVX — CVD CVT		LD - LX		LD - LX		CVX-CVD-CVT		SFD-SFT-STD			OVERALL RATIO
OUTPUT O.H.L.		OUTPUT O.H.L.									
UP	DOWN	UP	DOWN	OUTPUT THRUST DOWN	OUTPUT THRUST UP	OUTPUT THRUST DOWN	OUTPUT THRUST UP	OUTPUT THRUST TOWARDS BASE	OUTPUT THRUST AWAY FROM BASE	OUTPUT O.H.L. ‡ †	
1391 1391	1309 1309					3385 3385	3024 3024	3920 3920	3024 3024	2268 2268	1725 rpm INPUT 5000 (T) OUTPUT .345 rpm
1391 1391	1309 1309					3385 3385	3024 3024	3920 3920	3024 3024	2268 2268	1725 rpm INPUT 7500 (T) OUTPUT .230 rpm
1391 1391	1309 1309					3385 3385	3024 3024	3920 3920	3024 3024	2268 2268	1725 rpm INPUT 10000 (T) OUTPUT .173 rpm
1391 1391	1309 1309					3385 3385	3024 3024	3920 3920	3024 3024	2268 2268	1725 rpm INPUT 20000 (T) OUTPUT .086 rpm
1391 1391	1309 1309					3385 3385	3024 3024	3920 3920	3024 3024	2268 2268	1725 rpm INPUT 30000 (T) OUTPUT .058 rpm
1391 1391	1309 1309					3385 3385	3024 3024	3920 3920	3024 3024	2268 2268	1725 rpm INPUT 40000 (T) OUTPUT .043 rpm
1391 1391	1309 1309					3385 3385	3024 3024	3920 3920	3024 3024	2268 2268	1725 rpm INPUT 50000 (T) OUTPUT .035 rpm
1391 1391	1309 1309					3385 3385	3024 3024	3920 3920	3024 3024	2268 2268	1725 rpm INPUT 60000 (T) OUTPUT .029 rpm
1391 1391	1309 1309					3385 3385	3024 3024	3920 3920	3024 3024	2268 2268	1725 rpm INPUT 75000 (T) OUTPUT .023 rpm
1391 1391	1309 1309					3385 3385	3024 3024	3920 3920	3024 3024	2268 2268	1725 rpm INPUT 80000 (T) OUTPUT .022 rpm
1391 1391	1309 1309					3385 3385	3024 3024	3920 3920	3024 3024	2268 2268	1725 rpm INPUT 90000 (T) OUTPUT .019 rpm
1391 1391	1309 1309					3385 3385	3024 3024	3920 3920	3024 3024	2268 2268	1725 rpm INPUT 100000 (T) OUTPUT .017 rpm
1391 1391	1309 1309					3385 3385	3024 3024	3920 3920	3024 3024	2268 2268	1725 rpm INPUT 150000 (T) OUTPUT .012 rpm
1391 1391	1309 1309					3385 3385	3024 3024	3920 3920	3024 3024	2268 2268	1725 rpm INPUT 180000 (T) OUTPUT .010 rpm

***Overhung Load given at one shaft diameter from housing or mounting flange.*

‡ O.H.L. based on maximum bore. Use of smaller diameter shaft may limit O.H.L.

† 6.6875" from centerline.

5

DOUBLE AND TRIPLE REDUCTION REDUCER NO. 7

H Double Reduction Series Helical and Worm Gear
D Double Reduction Series Worm Gear
T Triple Reduction Series Worm Gear

All ratings stated are for A.G.M.A. Class 1 service.

HORSEPOWER TORQUE AND

OVERALL RATIO	INPUT SPEED R.P.M.	OUTPUT R.P.M.	RATIOS★ DOUBLE 1ST	RATIOS★ DOUBLE 2ND	RATIOS★ TRIPLE 3RD	INPUT H.P.	OUTPUT TORQUE INCH LBS.	GEARMOTOR H.P. @ 1800 / OUTPUT TORQUE INCH LBS.	CBX-CTX CVX-LX INPUT O.H.L.	CBD-CVD SFD-CTD LD INPUT O.H.L.	CTT-CVT SFT INPUT O.H.L.	CBD-CTD CBX-CTX CTT OUTPUT O.H.L.
1725 rpm INPUT 50 (H) OUTPUT 34.5 rpm	1800	36.00	2	25 (26)		3.10	4267		230			1924
	1200	24.00				2.42	4867		230			1924
	600	12.00				1.35	5050		230			1924
	100	2.00				0.28	5050		230			1924
1725 rpm INPUT 50 (D) OUTPUT 34.5 rpm	1800	36.00	5	10 (9-3/4)		3.88	5088	5 / 5088 *		349		1924
	1200	24.00				2.85	5407			349		1924
	600	12.00				1.63	5725			349		1924
	100	2.00				0.37	6001			349		1924
1725 rpm INPUT 60 (H) OUTPUT 28.75 rpm	1800	30.00	2	30		2.98	4276		230			1924
	1200	20.00				2.48	5160		230			1924
	600	10.00				1.62	6227		230			1924
	100	1.67				0.38	6664		230			1924
1725 rpm INPUT 75 (H) OUTPUT 23 rpm	1800	24.00	3	25 (26)		2.42	4867		230			1924
	1200	16.00				1.74	5050		230			1924
	600	8.00				0.95	5050		230			1924
	100	1.33				0.20	5050		230			1924
1725 rpm INPUT 75 (D) OUTPUT 23 rpm	1800	24.00	5	15 (14-1/2)		3.27	5815	3 / 5297		349		1924
	1200	16.00				2.46	6275			349		1924
	600	8.00				1.43	6611			349		1924
	100	1.33				0.33	6611			349		1924
1725 rpm INPUT 80 (H) OUTPUT 21.56 rpm	1800	22.50	2	40 (39)		2.35	4295		230			1924
	1200	15.00				1.88	4963		230			1924
	600	7.50				1.10	5293		230			1924
	100	1.25				0.28	5293		230			1924
1725 rpm INPUT 90 (H) OUTPUT 19.17 rpm	1800	20.00	3	30		2.48	5160		230			1924
	1200	13.33				1.96	5849		230			1924
	600	6.67				1.22	6629		230			1924
	100	1.11				0.27	6629		230			1924
1725 rpm INPUT 100 (H) OUTPUT 17.25 rpm	1800	18.00	2	50 (51)		1.82	4056		230			1924
	1200	12.00				1.44	4619		230			1924
	600	6.00				0.83	4770		230			1924
	100	1.00				0.19	4770		230			1924
1725 rpm INPUT 100 (D) OUTPUT 17.25 rpm	1800	18.00	5	20		2.39	5569	2 / 4544		349		1924
	1200	12.00				1.78	5903			349		1924
	600	6.00				1.04	6149			349		1924
	100	1.00				0.25	6149			349		1924
1725 rpm INPUT 120 (H) OUTPUT 14.38 rpm	1800	15.00	2	60		1.57	3851		230			1924
	1200	10.00				1.25	4374		230			1924
	600	5.00				0.75	4635		230			1924
	100	0.833				0.18	4635		230			1924
1725 rpm INPUT 150 (H) OUTPUT 11.5 rpm	1800	12.00	3	50 (51)		1.44	4619		230			1924
	1200	8.00				1.06	4770		230			1924
	600	4.00				0.60	4770		230			1924
	100	0.67				0.14	4770		230			1924
1725 rpm INPUT 150 (D) OUTPUT 11.5 rpm	1800	12.00	10	15 (14-1/2)		2.04	6518	2 / 6368		349		1924
	1200	8.00				1.47	6611			349		1924
	600	4.00				0.83	6611			349		1924
	100	0.67				0.21	6611			349		1924
1725 rpm INPUT 180 (H) OUTPUT 9.58 rpm	1800	10.00	3	60		1.24	4374		230			1924
	1200	6.67				0.93	4635		230			1924
	600	3.33				0.54	4635		230			1924
	100	0.555				0.13	4635		230			1924

★*Numbers shown in ( ) are exact ratios.*

**Motor H.P. exceeds reducer capacity. Output must be limited to torque shown.*

H Center Distance: Primary (Helical) 1.875" Secondary (Worm) 4.000"
D Center Distance: Primary 2.625" Secondary 4.000"
Maximum NEMA Motor Frame Size: 184C - 145TC Flange.
T Center Distance: Primary 1.333" Secondary 2.625" Third 4.000"
Maximum NEMA Motor Frame Size: 56C Flange.

REDUCER NO. 7

OVERHUNG LOAD RATINGS

**OVERHUNG AND THRUST LOAD-SHAFTS (INCLUDES MOTORIZED WHERE APPLICABLE)

CVX — CVD CVT		LD - LX		LD - LX		CVX-CVD-CVT		SFD-SFT-STD			OVERALL RATIO
OUTPUT O.H.L.		OUTPUT O.H.L.									
UP	DOWN	UP	DOWN	OUTPUT THRUST DOWN	OUTPUT THRUST UP	OUTPUT THRUST DOWN	OUTPUT THRUST UP	OUTPUT THRUST TOWARDS BASE	OUTPUT THRUST AWAY FROM BASE	OUTPUT O.H.L. ‡ †	
1924	1795	2871	2428	1843	3024	3516	3024				1725 rpm INPUT
1924	1795	2871	2428	2164	3024	3516	3024				50 (H)
1924	1795	2871	2428	2813	3024	3516	3024				
1924	1795	2871	2428	3200	3024	3516	3024				OUTPUT 34.5 rpm
1924	1795	2871	2428	1115	2999	2973	2957	4208	3024	2268	1725 rpm INPUT
1924	1795	2871	2428	1430	3024	3516	3024	4208	3024	2268	50 (D)
1924	1795	2871	2428	2043	3024	3516	3024	4208	3024	2268	
1924	1795	2871	2428	3014	3024	3516	3024	4208	3024	2268	OUTPUT 34.5 rpm
1924	1795	2871	2428	1997	3024	3516	3024				1725 rpm INPUT
1924	1795	2871	2428	2193	3024	3516	3024				60 (H)
1924	1795	2871	2428	2840	3024	3516	3024				
1924	1795	2871	2428	3200	3024	3516	3024				OUTPUT 28.75 rpm
1924	1795	2871	2428	2164	3024	3516	3024				1725 rpm INPUT
1924	1795	2871	2428	2526	3024	3516	3024				75 (H)
1924	1795	2871	2428	3200	3024	3516	3024				
1924	1795	2871	2428	3200	3024	3516	3024				OUTPUT 23 rpm
1924	1795	2871	2428	1718	3024	3516	3024	4208	3024	2268	1725 rpm INPUT
1924	1795	2871	2428	2065	3024	3516	3024	4208	3024	2268	75 (D)
1924	1795	2871	2428	2769	3024	3516	3024	4208	3024	2268	
1924	1795	2871	2428	3200	3024	3516	3024	4208	3024	2268	OUTPUT 23 rpm
1924	1795	2871	2428	2256	3024	3516	3024				1725 rpm INPUT
1924	1795	2871	2428	2622	3024	3516	3024				80 (H)
1924	1795	2871	2428	3200	3024	3516	3024				
1924	1795	2871	2428	3200	3024	3516	3024				OUTPUT 21.56 rpm
1924	1795	2871	2428	2193	3024	3516	3024				1725 rpm INPUT
1924	1795	2871	2428	2540	3024	3516	3024				90 (H)
1924	1795	2871	2428	3200	3024	3516	3024				
1924	1795	2871	2428	3200	3024	3516	3024				OUTPUT 19.17 rpm
1924	1795	2871	2428	2526	3024	3516	3024				1725 rpm INPUT
1924	1795	2871	2428	2975	3024	3516	3024				100 (H)
1924	1795	2871	2428	3200	3024	3516	3024				
1924	1795	2871	2428	3200	3024	3516	3024				OUTPUT 17.25 rpm
1924	1795	2871	2428	2150	3024	3516	3024	4208	3024	2268	1725 rpm INPUT
1924	1795	2871	2428	2536	3024	3516	3024	4208	3024	2268	100 (D)
1924	1795	2871	2428	3200	3024	3516	3024	4208	3024	2268	
1924	1795	2871	2428	3200	3024	3516	3024	4208	3024	2268	OUTPUT 17.25 rpm
1924	1795	2871	2428	2784	3024	3516	3024				1725 rpm INPUT
1924	1795	2871	2428	3200	3024	3516	3024				120 (H)
1924	1795	2871	2428	3200	3024	3516	3024				
1924	1795	2871	2428	3200	3024	3516	3024				OUTPUT 14.38 rpm
1924	1795	2871	2428	2975	3024	3516	3024				1725 rpm INPUT
1924	1795	2871	2428	3200	3024	3516	3024				150 (H)
1924	1795	2871	2428	3200	3024	3516	3024				
1924	1795	2871	2428	3200	3024	3516	3024				OUTPUT 11.5 rpm
1924	1795	2871	2428	2332	3024	3516	3024	4208	3024	2268	1725 rpm INPUT
1924	1795	2871	2428	2769	3024	3516	3024	4208	3024	2268	150 (D)
1924	1795	2871	2428	3200	3024	3516	3024	4208	3024	2268	
1924	1795	2871	2428	3200	3024	3516	3024	4208	3024	2268	OUTPUT 11.5 rpm
1924	1795	2871	2428	3200	3024	3516	3024				1725 rpm INPUT
1924	1795	2871	2428	3200	3024	3516	3024				180 (H)
1924	1795	2871	2428	3200	3024	3516	3024				
1924	1795	2871	2428	3200	3024	3516	3024				OUTPUT 9.58 rpm

***Overhung Load given at one shaft diameter from housing or mounting flange.*

‡ O.H.L. based on maximum bore. Use of smaller diameter shaft may limit O.H.L.

† 8.1875" from centerline.

5

DOUBLE AND TRIPLE REDUCTION REDUCER NO. 7

H Double Reduction Series Helical and Worm Gear
D Double Reduction Series Worm Gear
T Triple Reduction Series Worm Gear

All ratings stated are for A.G.M.A. Class 1 service.

OVERALL RATIO	INPUT SPEED R.P.M.	OUTPUT R.P.M.	RATIOS★ DOUBLE 1ST	RATIOS★ DOUBLE 2ND	RATIOS★ TRIPLE 3RD	INPUT H.P.	OUTPUT TORQUE INCH LBS.	GEARMOTOR H.P. @ 1800 / OUTPUT TORQUE INCH LBS.	HORSEPOWER TORQUE AND CBX-CTX CVX-LX INPUT O.H.L.	CBD-CVD SFD-CTD LD INPUT O.H.L.	CTT-CVT SFT INPUT O.H.L.	CBD-CTD CBX-CTX CTT OUTPUT O.H.L.
1725 rpm INPUT 200 (D) OUTPUT 8.63 rpm	1800	9.00	10	20		1.48	6065	1-1/2 / 6065 *		349		1924
	1200	6.00				1.07	6149			349		1924
	600	3.00				0.62	6149			349		1924
	100	0.50				0.16	6149			349		1924
1725 rpm INPUT 300 (D) OUTPUT 5.75 rpm	1800	6.00	10	30		1.33	6664	1-1/2 / 6664 *		349		1924
	1200	4.00				0.97	6664			349		1924
	600	2.00				0.57	6664			349		1924
	100	0.33				0.16	6664			349		1924
1725 rpm INPUT 500 (D) OUTPUT 3.45 rpm	1800	3.60	25	20		0.79	6149	3/4 / 5702		349		1924
	1200	2.40				0.58	6149			349		1924
	600	1.20				0.35	6149			349		1924
	100	0.20				0.10	6149			349		1924
1725 rpm INPUT 750 (D) OUTPUT 2.30 rpm	1800	2.40	25	30		0.74	6664	3/4 / 6664 *		349		1924
	1200	1.60				0.55	6664			349		1924
	600	0.80				0.34	6664			349		1924
	100	0.13				0.11	6664			349		1924
1725 rpm INPUT 1000 (D) OUTPUT 1.73 rpm	1800	1.80	50	20		0.55	6149	1/2 / 5321		349		1924
	1200	1.20				0.41	6149			349		1924
	600	0.60				0.26	6149			349		1924
	100	0.10				0.09	6149			349		1924
1725 rpm INPUT 1000 (T) OUTPUT 1.73 rpm	1800	1.80	5	10	20	0.515	6149	1/2 / 5212			146	1924
	1200	1.20				0.382	6149				146	1924
	600											
	100											
1725 rpm INPUT 1500 (D) OUTPUT 1.15 rpm	1800	1.20	50	30		0.53	6664	1/2 / 6137		349		1924
	1200	0.80				0.40	6664			349		1924
	600	0.40				0.26	6664			349		1924
	100	0.07				0.09	6664			349		1924
1725 rpm INPUT 1500 (T) OUTPUT 1.15 rpm	1800	1.20	5	10	30	0.482	6664	1/2 / 6664 *			146	1924
	1200	0.80				0.361	6664				146	1924
	600										146	
	100										146	
1725 rpm INPUT 2000 (D) OUTPUT .863 rpm	1800	0.900	50	40 (39)		0.393	5293	1/2 / 5293 *		349		1924
	1200	0.600				0.301	5293			349		1924
	600	0.300				0.197	5293			349		1924
	100	0.050				0.073	5293			349		1924
1725 rpm INPUT 2000 (T) OUTPUT .863 rpm	1800	0.900	10	10	20	0.361	6149	1/3 / 5290			146	1924
	1200	0.600				0.273	6149				146	1924
	600										146	
	100										146	
1725 rpm INPUT 3000 (D) OUTPUT .575 rpm	1800	0.600	60	50 (51)		0.321	4770	1/3 / 4770 *		349		1924
	1200	0.400				0.249	4770			349		1924
	600	0.200				0.167	4770			349		1924
	100	0.033				0.061	4770			349		1924
1725 rpm INPUT 3000 (T) OUTPUT .575 rpm	1800	0.600	10	10	30	0.347	6664	1/3 / 6151			146	1924
	1200	0.400				0.265	6664				146	1924
	600										146	
	100										146	
1725 rpm INPUT 3600 (D) OUTPUT .479 rpm	1800	0.500	60	60		0.306	4635	1/3 / 4635 *		349		1924
	1200	0.333				0.238	4635			349		1924
	600	0.167				0.160	4635			349		1924
	100	0.028				0.059	4635			349		1924

★*Numbers shown in ( ) are exact ratios.*

**Motor H.P. exceeds reducer capacity. Output must be limited to torque shown.*

H Center Distance: Primary (Helical) 1.875" Secondary (Worm) 4.000"
D Center Distance: Primary 2.625" Secondary 4.000"
Maximum NEMA Motor Frame Size: 184C - 145TC Flange.
T Center Distance: Primary 1.333" Secondary 2.625" Third 4.000"
Maximum NEMA Motor Frame Size: 56C Flange.

REDUCER NO. **7**

OVERHUNG LOAD RATINGS

**OVERHUNG AND THRUST LOAD-SHAFTS (INCLUDES MOTORIZED WHERE APPLICABLE)

CVX — CVD CVT		LD - LX		LD - LX		CVX-CVD-CVT		SFD-SFT-STD			OVERALL RATIO
OUTPUT O.H.L.		OUTPUT O.H.L.									
UP	DOWN	UP	DOWN	OUTPUT THRUST DOWN	OUTPUT THRUST UP	OUTPUT THRUST DOWN	OUTPUT THRUST UP	OUTPUT THRUST TOWARDS BASE	OUTPUT THRUST AWAY FROM BASE	OUTPUT O.H.L. ‡ †	
1924	1795	2871	2428	2851	3024	3516	3024	4208	3024	2268	1725 rpm INPUT 200 (D) OUTPUT 8.63 rpm
1924	1795	2871	2428	3200	3024	3516	3024	4208	3024	2268	
1924	1795	2871	2428	3200	3024	3516	3024	4208	3024	2268	
1924	1795	2871	2428	3200	3024	3516	3024	4208	3024	2268	
1924	1795	2871	2428	3200	3024	3516	3024	4208	3024	2268	1725 rpm INPUT 300 (D) OUTPUT 5.75 rpm
1924	1795	2871	2428	3200	3024	3516	3024	4208	3024	2268	
1924	1795	2871	2428	3200	3024	3516	3024	4208	3024	2268	
1924	1795	2871	2428	3200	3024	3516	3024	4208	3024	2268	
1924	1795	2871	2428	3200	3024	3516	3024	4208	3024	2268	1725 rpm INPUT 500 (D) OUTPUT 3.45 rpm
1924	1795	2871	2428	3200	3024	3516	3024	4208	3024	2268	
1924	1795	2871	2428	3200	3024	3516	3024	4208	3024	2268	
1924	1795	2871	2428	3200	3024	3516	3024	4208	3024	2268	
1924	1795	2871	2428	3200	3024	3516	3024	4208	3024	2268	1725 rpm INPUT 750 (D) OUTPUT 2.30 rpm
1924	1795	2871	2428	3200	3024	3516	3024	4208	3024	2268	
1924	1795	2871	2428	3200	3024	3516	3024	4208	3024	2268	
1924	1795	2871	2428	3200	3024	3516	3024	4208	3024	2268	
1924	1795	2871	2428	3200	3024	3516	3024	4208	3024	2268	1725 rpm INPUT 1000 (D) OUTPUT 1.73 rpm
1924	1795	2871	2428	3200	3024	3516	3024	4208	3024	2268	
1924	1795	2871	2428	3200	3024	3516	3024	4208	3024	2268	
1924	1795	2871	2428	3200	3024	3516	3024	4208	3024	2268	
1924	1795					3516	3024	4208	3034	2268	1725 rpm INPUT 1000 (T) OUTPUT 1.73 rpm
1924	1795					3516	3024	4208	3024	2268	
1924	1795	2871	2428	3200	3024	3516	3024	4208	3024	2268	1725 rpm INPUT 1500 (D) OUTPUT 1.15 rpm
1924	1795	2871	2428	3200	3024	3516	3024	4208	3024	2268	
1924	1795	2871	2428	3200	3024	3516	3024	4208	3024	2268	
1924	1795	2871	2428	3200	3024	3516	3024	4208	3024	2268	
1924	1795					3516	3024	4208	3024	2268	1725 rpm INPUT 1500 (T) OUTPUT 1.15 rpm
1924	1795					3516	3024	4208	3024	2268	
1924	1795	2871	2428	3200	3024	3516	3024	4208	3024	2268	1725 rpm INPUT 2000 (D) OUTPUT .863 rpm
1924	1795	2871	2428	3200	3024	3516	3024	4208	3024	2268	
1924	1795	2871	2428	3200	3024	3516	3024	4208	3024	2268	
1924	1795	2871	2428	3200	3024	3516	3024	4208	3024	2268	
1924	1795					3516	3024	4208	3024	2268	1725 rpm INPUT 2000 (T) OUTPUT .863 rpm
1924	1795					3516	3024	4208	3024	2268	
1924	1795	2871	2428	3200	3024	3516	3024	4208	3024	2268	1725 rpm INPUT 3000 (D) OUTPUT .575 rpm
1924	1795	2871	2428	3200	3024	3516	3024	4208	3024	2268	
1924	1795	2871	2428	3200	3024	3516	3024	4208	3024	2268	
1924	1795	2871	2428	3200	3024	3516	3024	4208	3024	2268	
1924	1795					3516	3024	4208	3024	2268	1725 rpm INPUT 3000 (T) OUTPUT .575 rpm
1924	1795					3516	3024	4208	3024	2268	
1924	1795	2871	2428	3200	3024	3516	3024	4208	3024	2268	1725 rpm INPUT 3600 (D) OUTPUT .479 rpm
1924	1795	2871	2428	3200	3024	3516	3024	4208	3024	2268	
1924	1795	2871	2428	3200	3024	3516	3024	4208	3024	2268	
1924	1795	2871	2428	3200	3024	3516	3024	4208	3024	2268	

***Overhung Load given at one shaft diameter from housing or mounting flange.*

‡ O.H.L. based on maximum bore. Use of smaller diameter shaft may limit O.H.L.

† 8.1875" from centerline.

5

DOUBLE AND TRIPLE REDUCTION REDUCER NO. 7

H Double Reduction Series Helical and Worm Gear
D Double Reduction Series Worm Gear
T Triple Reduction Series Worm Gear

All ratings stated are for A.G.M.A. Class 1 service.

HORSEPOWER TORQUE AND

OVERALL RATIO	INPUT SPEED R.P.M.	OUTPUT R.P.M.	RATIOS★ DOUBLE 1ST	RATIOS★ DOUBLE 2ND	RATIOS★ TRIPLE 3RD	INPUT H.P.	OUTPUT TORQUE INCH LBS.	GEARMOTOR H.P. @ 1800 / OUTPUT TORQUE INCH LBS.	CBX-CTX CVX-LX INPUT O.H.L.	CBD-CVD SFD-CTD LD INPUT O.H.L.	CTT-CVT SFT INPUT O.H.L.	CBD-CTD CBX-CTX CTT OUTPUT O.H.L.
1725 rpm INPUT 5000 (T) OUTPUT .345 rpm	1800 1200 600 100	0.360 0.240	25	10	20	0.258 0.196	6149 6149	1/4 5707			146 146	1924 1924
1725 rpm INPUT 7500 (T) OUTPUT .230 rpm	1800 1200 600 100	0.240 0.160	25	10	30	0.255 0.196	6664 6664	1/4 6414			146 146	1924 1924
1725 rpm INPUT 10000 (T) OUTPUT .173 rpm	1800 1200 600 100	0.180 0.120	20	25	20	0.217 0.166	6149 6149	1/4 6149 *			146 146	1924 1924
1725 rpm INPUT 20000 (T) OUTPUT .086 rpm	1800 1200 600 100	0.090 0.060	40	25	20	0.190 0.146	6149 6149	1/6 4079			146 146	1924 1924
1725 rpm INPUT 30000 (T) OUTPUT .058 rpm	1800 1200 600 100	0.060 0.040	40	25	30	0.193 0.150	6664 6664	1/6 4225			146 146	1924 1924
1725 rpm INPUT 40000 (T) OUTPUT .043 rpm	1800 1200 600 100	0.045 0.030	40	50	20	0.178 0.138	6149 6149	1/6 5535			146 146	1924 1924
1725 rpm INPUT 50000 (T) OUTPUT .035 rpm	1800 1200 600 100	0.036 0.024	50	50	20	0.179 0.139	6149 6149	1/6 5539			146 146	1924 1924
1725 rpm INPUT 60000 (T) OUTPUT .029 rpm	1800 1200 600 100	0.030 0.020	40	50	30	0.182 0.142	6664 6664	1/6 5540			146 146	1924 1924
1725 rpm INPUT 75000 (T) OUTPUT .023 rpm	1800 1200 600 100	0.024 0.016	50	50	30	0.184 0.144	6664 6664	1/6 5471			146 146	1924 1924
1725 rpm INPUT 80000 (T) OUTPUT .022 rpm	1800 1200 600 100	0.023 0.015	40	50	40 (39)	0.163 0.126	5293 5293	1/6 5293 *			146 146	1924 1924
1725 rpm INPUT 90000 (T) OUTPUT .019 rpm	1800 1200 600 100	0.020 0.113	60	50	30	0.167 0.130	6664 6664	1/6 6664 *			146 146	1924 1924
1725 rpm INPUT 100000 (T) OUTPUT .017 rpm	1800 1200 600 100	0.018 0.012	50	50	40 (39)	0.164 0.126	5293 5293	1/6 5293 *			146 146	1924 1924
1725 rpm INPUT 150000 (T) OUTPUT .012 rpm	1800 1200 600 100	0.012 0.008	50	60	50 (51)	0.156 0.120	4770 4770	1/6 4770 *			146 146	1924 1924
1725 rpm INPUT 180000 (T) OUTPUT .010 rpm	1800 1200 600 100	0.010 0.007	50	60	60	0.155 0.118	4635 4635	1/6 4635 *			146 146	1924 1924

★*Numbers shown in ( ) are exact ratios.*

**Motor H.P. exceeds reducer capacity. Output must be limited to torque shown.*

H Center Distance: Primary (Helical) 1.875" Secondary (Worm) 4.000"
D Center Distance: Primary 2.625" Secondary 4.000"
Maximum NEMA Motor Frame Size: 184C - 145TC Flange.
T Center Distance: Primary 1.333" Secondary 2.625" Third 4.000"
Maximum NEMA Motor Frame Size: 56C Flange.

REDUCER NO.
7

OVERHUNG LOAD RATINGS

**OVERHUNG AND THRUST LOAD-SHAFTS (INCLUDES MOTORIZED WHERE APPLICABLE)

CVX — CVD CVT OUTPUT O.H.L. UP	CVX — CVD CVT OUTPUT O.H.L. DOWN	LD - LX OUTPUT O.H.L. UP	LD - LX OUTPUT O.H.L. DOWN	LD - LX OUTPUT THRUST DOWN	LD - LX OUTPUT THRUST UP	CVX-CVD-CVT OUTPUT THRUST DOWN	CVX-CVD-CVT OUTPUT THRUST UP	SFD-SFT-STD OUTPUT THRUST TOWARDS BASE	SFD-SFT-STD OUTPUT THRUST AWAY FROM BASE	SFD-SFT-STD OUTPUT O.H.L. ‡ †	OVERALL RATIO
1924 1924	1795 1795					3516 3516	3024 3024	4208 4208	3024 3024	2268 2268	1725 rpm INPUT 5000 (T) OUTPUT .345 rpm
1924 1924	1795 1795					3516 3516	3024 3024	4208 4208	3024 3024	2268 2268	1725 rpm INPUT 7500 (T) OUTPUT .230 rpm
1924 1924	1795 1795					3516 3516	3024 3024	4208 4208	3024 3024	2268 2268	1725 rpm INPUT 10000 (T) OUTPUT .173 rpm
1924 1924	1795 1795					3516 3516	3024 3024	4208 4208	3024 3024	2268 2268	1725 rpm INPUT 20000 (T) OUTPUT .086 rpm
1924 1924	1795 1795					3516 3516	3024 3024	4208 4208	3024 3024	2268 2268	1725 rpm INPUT 30000 (T) OUTPUT .058 rpm
1924 1924	1795 1795					3516 3516	3024 3024	4208 4208	3024 3024	2268 2268	1725 rpm INPUT 40000 (T) OUTPUT .043 rpm
1924 1924	1795 1795					3516 3516	3024 3024	4208 4208	3024 3024	2268 2268	1725 rpm INPUT 50000 (T) OUTPUT .035 rpm
1924 1924	1795 1795					3516 3516	3024 3024	4208 4208	3024 3024	2268 2268	1725 rpm INPUT 60000 (T) OUTPUT .029 rpm
1924 1924	1795 1795					3516 3516	3024 3024	4208 4208	3024 3024	2268 2268	1725 rpm INPUT 75000 (T) OUTPUT .023 rpm
1924 1924	1795 1795					3516 3516	3024 3024	4208 4208	3024 3024	2268 2268	1725 rpm INPUT 80000 (T) OUTPUT .022 rpm
1924 1924	1795 1795					3516 3516	3024 3024	4208 4208	3024 3024	2268 2268	1725 rpm INPUT 90000 (T) OUTPUT .019 rpm
1924 1924	1795 1795					3516 3516	3024 3024	4208 4208	3024 3024	2268 2268	1725 rpm INPUT 100000 (T) OUTPUT .017 rpm
1924 1924	1795 1795					3516 3516	3024 3024	4208 4208	3024 3024	2268 2268	1725 rpm INPUT 150000 (T) OUTPUT .012 rpm
1924 1924	1795 1795					3516 3516	3024 3024	4208 4208	3024 3024	2268 2268	1725 rpm INPUT 180000 (T) OUTPUT .010 rpm

***Overhung Load given at one shaft diameter from housing or mounting flange.*

‡ *O.H.L. based on maximum bore. Use of smaller diameter shaft may limit O.H.L.*

† *8.1875" from centerline.*

5

DOUBLE AND TRIPLE REDUCTION REDUCER NO. 8

H Double Reduction Series Helical and Worm Gear
D Double Reduction Series Worm Gear
T Triple Reduction Series Worm Gear

All ratings stated are for A.G.M.A. Class 1 service.

OVERALL RATIO	INPUT SPEED R.P.M.	OUTPUT R.P.M.	RATIOS★ DOUBLE 1ST	RATIOS★ DOUBLE 2ND	RATIOS★ TRIPLE 3RD	INPUT H.P.	OUTPUT TORQUE INCH LBS.	GEARMOTOR H.P. @ 1800 / OUTPUT TORQUE INCH LBS.	HORSEPOWER TORQUE AND CBX-CTX GVX-LX INPUT O.H.L.	CBD-CVD SFD-CTD LD INPUT O.H.L.	CTT-CVT SFT INPUT O.H.L.	CBD-CTD CBX-CTX CTT OUTPUT O.H.L.
1725 rpm INPUT	1800	36.00				4.19	5711		230			2870
50 (H)	1200	24.00	2	25		3.24	6491		230			2870
	600	12.00				1.94	7378		230			2870
OUTPUT 34.50 rpm	100	2.00				0.41	7378		230			2870
1725 rpm INPUT	1800	36.00				4.44	5894			349		2870
50 (D)	1200	24.00	5	10		3.73	7251	5		349		2870
	600	12.00				2.23	8083	5894		349		2870
OUTPUT 34.5 rpm	100	2.00		(9-3/4)		0.51	8544	*		349		2870
1725 rpm INPUT	1800	30.00				3.96	6008		230			2870
60 (H)	1200	20.00	2	30		3.24	7175		230			2870
	600	10.00				2.07	8568		230			2870
OUTPUT 28.75 rpm	100	1.67				0.45	8568		230			2870
1725 rpm INPUT	1800	24.00				3.24	6491		230			2870
75 (H)	1200	16.00	3	25		2.56	7498		230			2870
	600	8.00				1.39	7600		230			2870
OUTPUT 23.00 rpm	100	1.33				0.29	7600		230			2870
1725 rpm INPUT	1800	24.00				3.53	6746			349		2870
75 (D)	1200	16.00	7-1/2	10		2.85	7906	3		349		2870
	600	8.00				1.62	8264	5654		349		2870
OUTPUT 23.00 rpm	100	1.33		(9-3/4)		0.37	8576			349		2870
1725 rpm INPUT	1800	22.50				3.09	5860		230			2870
80 (H)	1200	15.00	2	40		2.45	6771		230			2870
	600	7.50				1.53	7823		230			2870
OUTPUT 21.56 rpm	100	1.25		(39)		0.35	7900		230			2870
1725 rpm INPUT	1800	20.00				3.24	7175		230			2870
90 (H)	1200	13.33	3	30		2.52	8076		230			2870
	600	6.67				1.38	8076		230			2870
OUTPUT 19.17 rpm	100	1.11				0.31	8076		230			2870
1725 rpm INPUT	1800	18.00				2.41	5392		230			2870
100 (H)	1200	12.00	2	50		2.03	6610		230			2870
	600	6.00				1.22	7180		230			2870
OUTPUT 17.25 rpm	100	1.00		(51)		0.29	7180		230			2870
1725 rpm INPUT	1800	18.00				2.96	7256			349		2870
100 (D)	1200	12.00	5	20		2.18	7656	3		349		2870
	600	6.00				1.27	8078	7256		349		2870
OUTPUT 17.25 rpm	100	1.00				0.31	8448	*		349		2870
1725 rpm INPUT	1800	15.00				2.01	5207		230			2870
120 (H)	1200	10.00	2	60		1.59	5930		230			2870
	600	5.00				0.97	6510		230			2870
OUTPUT 14.38 rpm	100	0.83		(61)		0.23	6510		230			2870
1725 rpm INPUT	1800	12.00				2.03	6610		230			2870
150 (H)	1200	8.00	3	50		1.55	7180		230			2870
	600	4.00				0.87	7180		230			2870
OUTPUT 11.50 rpm	100	0.67		(51)		0.21	7180		230			2870
1725 rpm INPUT	1800	12.00				2.59	8269			349		2870
150 (D)	1200	8.00	5	30		1.95	8778	3		349		2870
	600	4.00				1.20	9531	8269		349		2870
OUTPUT 11.50 rpm	100	0.67				0.32	10112	*		349		2870
1725 rpm INPUT	1800	10.00				1.59	5930		230			2870
180 (H)	1200	6.67	3	60		1.22	6467		230			2870
	600	3.33				0.70	6510		230			2870
OUTPUT 9.58 rpm	100	0.56		(61)		0.17	6510		230			2870

★*Numbers shown in ( ) are exact ratios.*

**Motor H.P. exceeds reducer capacity. Output must be limited to torque shown.*

H Center Distance: Primary (Helical) 1.875" Secondary (Worm) 4.6"
D Center Distance: Primary 2.625" Secondary 4.6"
Maximum NEMA Motor Frame Size: 184C - 145TC Flange.
T Center Distance: Primary 1.333" Secondary 2.625" Third 4.6"
Maximum NEMA Motor Frame Size: 56C Flange.

REDUCER NO. 8

OVERHUNG LOAD RATINGS

**OVERHUNG AND THRUST LOAD-SHAFTS (INCLUDES MOTORIZED WHERE APPLICABLE)

CVX — CVD CVT		LD - LX		LD - LX		CVX-CVD-CVT		SFD-SFT-STD			OVERALL RATIO
OUTPUT O.H.L.		OUTPUT O.H.L.									
UP	DOWN	UP	DOWN	OUTPUT THRUST DOWN	OUTPUT THRUST UP	OUTPUT THRUST DOWN	OUTPUT THRUST UP	OUTPUT THRUST TOWARDS BASE	OUTPUT THRUST AWAY FROM BASE	OUTPUT O.H.L. ‡ †	
2870	2735	2870	2773	3503	3470	3468	3468				1725 rpm INPUT
2870	2735	2870	2773	3516	3936	3516	3516				50 (H)
2870	2735	2870	2773	3516	4464	3516	3516				
2870	2735	2870	2773	3516	4464	3516	3516				OUTPUT 34.50 rpm
2870	2735	2870	2773	3516	2642	2591	2591	4866	4464	3636	1725 rpm INPUT
2870	2735	2870	2773	3516	3164	3109	3109	4866	4464	3636	50 (D)
2870	2735	2870	2773	3516	4266	3516	3516	4866	4464	3636	
2870	2735	2870	2773	3516	4464	3516	3516	4866	4464	3636	OUTPUT 34.5 rpm
2870	2735	2870	2773	3516	3835	3516	3516				1725 rpm INPUT
2870	2735	2870	2773	3516	4261	3516	3516				60 (H)
2870	2735	2870	2773	3516	4464	3516	3516				
2870	2735	2870	2773	3516	4464	3516	3516				OUTPUT 28.75 rpm
2870	2735	2870	2773	3516	3936	3516	3516				1725 rpm INPUT
2870	2735	2870	2773	3516	4464	3516	3516				75 (H)
2870	2735	2870	2773	3516	4464	3516	3516				
2870	2735	2870	2773	3516	4464	3516	3516				OUTPUT 23.00 rpm
2870	2735	2870	2773	3211	3164	3109	3109	4866	4464	3636	1725 rpm INPUT
2870	2735	2870	2773	3516	3769	3516	3516	4866	4464	3636	75 (D)
2870	2735	2870	2773	3516	4464	3516	3516	4866	4464	3636	
2870	2735	2870	2773	3516	4464	3516	3516	4866	4464	3636	OUTPUT 23.00 rpm
2870	2735	2870	2773	3516	4302	3516	3516				1725 rpm INPUT
2870	2735	2870	2773	3516	4464	3516	3516				80 (H)
2870	2735	2870	2773	3516	4464	3516	3516				
2870	2735	2870	2773	3516	4464	3516	3516				OUTPUT 21.56 rpm
2870	2735	2870	2773	3516	4261	3516	3516				1725 rpm INPUT
2870	2735	2870	2773	3516	4464	3516	3516				90 (H)
2870	2735	2870	2773	3516	4464	3516	3516				
2870	2735	2870	2773	3516	4464	3516	3516				OUTPUT 19.17 rpm
2870	2735	2870	2773	3516	4464	3516	3516				1725 rpm INPUT
2870	2735	2870	2773	3516	4464	3516	3516				100 (H)
2870	2735	2870	2773	3516	4464	3516	3516				
2870	2735	2870	2773	3516	4464	3516	3516				OUTPUT 17.25 rpm
2870	2735	2870	2773	3516	4150	3516	3516	4866	4464	3636	1725 rpm INPUT
2870	2735	2870	2773	3516	4464	3516	3516	4866	4464	3636	100 (D)
2870	2735	2870	2773	3516	4464	3516	3516	4866	4464	3636	
2870	2735	2870	2773	3516	4464	3516	3516	4866	4464	3636	OUTPUT 17.25 rpm
2870	2735	2870	2773	3516	4464	3516	3516				1725 rpm INPUT
2870	2735	2870	2773	3516	4464	3516	3516				120 (H)
2870	2735	2870	2773	3516	4464	3516	3516				
2870	2735	2870	2773	3516	4464	3556	3516				OUTPUT 14.38 rpm
2870	2735	2870	2773	3516	4464	3516	3516				1725 rpm INPUT
2870	2735	2870	2773	3516	4464	3516	3516				150 (H)
2870	2735	2870	2773	3516	4464	3516	3516				
2870	2735	2870	2773	3516	4464	3516	3516				OUTPUT 11.50 rpm
2870	2735	2870	2773	3516	4464	3516	3516	4866	4464	3636	1725 rpm INPUT
2870	2735	2870	2773	3516	4464	3516	3516	4866	4464	3636	150 (D)
2870	2735	2870	2773	3516	4464	3516	3516	4866	4464	3636	
2870	2735	2870	2773	3516	4464	3516	3516	4866	4464	3636	OUTPUT 11.50 rpm
2870	2735	2870	2773	3516	4464	3516	3516				1725 rpm INPUT
2870	2735	2870	2773	3516	4464	3516	3516				180 (H)
2870	2735	2870	2773	3516	4464	3516	3516				
2870	2735	2870	2773	3516	4464	3516	3516				OUTPUT 9.58 rpm

***Overhung Load given at one shaft diameter from housing or mounting flange.*

‡ O.H.L. based on maximum bore. Use of smaller diameter shaft may limit O.H.L.

† 8.750" from centerline.

5

DOUBLE AND TRIPLE REDUCTION REDUCER NO. 8

H Double Reduction Series Helical and Worm Gear
D Double Reduction Series Worm Gear
T Triple Reduction Series Worm Gear

All ratings stated are for A.G.M.A. Class 1 service.

HORSEPOWER TORQUE AND

OVERALL RATIO	INPUT SPEED R.P.M.	OUTPUT R.P.M.	RATIOS★ DOUBLE 1ST	RATIOS★ DOUBLE 2ND	RATIOS★ TRIPLE 3RD	INPUT H.P.	OUTPUT TORQUE INCH LBS.	GEARMOTOR H.P. @ 1800 / OUTPUT TORQUE INCH LBS.	CBX-CTX CVX-LX INPUT O.H.L.	CBD-CVD SFD-CTD LD INPUT O.H.L.	CTT-CVT SFT INPUT O.H.L.	CBD-CTD CBX-CTX CTT OUTPUT O.H.L.
1725 rpm INPUT 200 (D) OUTPUT 8.63 rpm	1800	9.00	10	20		1.79	7864	2 / 7864 *		349		2870
	1200	6.00				1.31	8078			349		2870
	600	3.00				0.76	8298			349		2870
	100	0.50				0.19	8485			349		2870
1725 rpm INPUT 300 (D) OUTPUT 5.75 rpm	1800	6.00	10	30		1.65	9198	1-1/2 / 8181		349		2870
	1200	4.00				1.23	9531			349		2870
	600	2.00				0.74	9875			349		2870
	100	0.33				0.20	10172			349		2870
1725 rpm INPUT 500 (D) OUTPUT 3.45 rpm	1800	3.60	25	20		0.97	8253	1 / 8253 *		349		2870
	1200	2.40				0.71	8342			349		2870
	600	1.20				0.43	8432			349		2870
	100	0.20				0.12	8508			349		2870
1725 rpm INPUT 750 (D) OUTPUT 2.30 rpm	1800	2.40	25	30		0.94	9805	1 / 9805 *		349		2870
	1200	1.60				0.70	9945			349		2870
	600	0.80				0.43	10088			349		2870
	100	0.13				0.13	10208			349		2870
1725 rpm INPUT 1000 (D) OUTPUT 1.73 rpm	1800	1.80	50	20		0.66	8387	3/4 / 8387 *		349		2870
	1200	1.20				0.50	8432			349		2870
	600	0.60				0.31	8478			349		2870
	100	0.10				0.10	8516			349		2870
1725 rpm INPUT 1000 (T) OUTPUT 1.73 rpm	1800	1.80	5	10	20	0.62	8387	3/4 / 8387 *			146	2870
	1200	1.20				0.45	8432				146	2870
	600											
	100											
1725 rpm INPUT 1500 (D) OUTPUT 1.15 rpm	1800	1.20	50	30		0.66	10016	3/4 / 10016 *		349		2870
	1200	0.80				0.51	10088			349		2870
	600	0.40				0.32	10159			349		2870
	100	0.06				0.11	10220			349		2870
1725 rpm INPUT 1500 (T) OUTPUT 1.15 rpm	1800	1.20	5	10	30	0.60	10016	3/4 / 10016 *			146	2870
	1200	0.80				0.45	10088				146	2870
	600											
	100											
1725 rpm INPUT 2000 (D) OUTPUT 0.863 rpm	1800	0.923	50	40 (39)		0.489	7900	1/2 / 7900 *		349		2870
	1200	0.615				0.374	7900			349		2870
	600	0.308				0.239	7900			349		2870
	100	0.051				0.082	7900			349		2870
1725 rpm INPUT 2000 (T) OUTPUT 0.863 rpm	1800	0.900	10	10	20	0.423	8455	1/2 / 8455 *			146	2870
	1200	0.600				0.317	8478				146	2870
	600											
	100											
1725 rpm INPUT 3000 (D) OUTPUT 0.575 rpm	1800	0.588	60	50 (51)		0.406	7180	1/2 / 7180 *		349		2870
	1200	0.392				0.315	7180			349		2870
	600	0.196				0.210	7180			349		2870
	100	0.033				0.075	7180			349		2870
1725 rpm INPUT 3000 (T) OUTPUT .575 rpm	1800	0.600	10	10	30	0.421	10123	1/2 / 10123			146	2870
	1200	0.400				0.319	10159				146	2870
	600											
	100											
1725 rpm INPUT 3600 (D) OUTPUT 0.479 rpm	1800	0.500	60	60 (61)		0.357	6510	1/3 / 5599		349		2870
	1200	0.333				0.278	6510			349		2870
	600	0.167				0.183	6510			349		2870
	100	0.028				0.066	6510			349		2870

★*Numbers shown in ( ) are exact ratios.*

**Motor H.P. exceeds reducer capacity. Output must be limited to torque shown.*

H Center Distance: Primary (Helical) 1.875" Secondary (Worm) 4.6"
D Center Distance: Primary 2.625" Secondary 4.6"
Maximum NEMA Motor Frame Size: 184C - 145TC Flange.
T Center Distance: Primary 1.333" Secondary 2.625" Third 4.6"
Maximum NEMA Motor Frame Size: 56C Flange.

REDUCER NO.
8

OVERHUNG LOAD RATINGS

**OVERHUNG AND THRUST LOAD-SHAFTS (INCLUDES MOTORIZED WHERE APPLICABLE)

CVX — CVD CVT		LD - LX		LD - LX		CVX-CVD-CVT		SFD-SFT-STD			OVERALL RATIO
OUTPUT O.H.L.		OUTPUT O.H.L.		OUTPUT THRUST DOWN	OUTPUT THRUST UP	OUTPUT THRUST DOWN	OUTPUT THRUST UP	OUTPUT THRUST TOWARDS BASE	OUTPUT THRUST AWAY FROM BASE	OUTPUT O.H.L. ‡ †	
UP	DOWN	UP	DOWN								
2870	2735	2870	2773	3516	4464	3516	3516	4866	4464	3636	1725 rpm INPUT
2870	2735	2870	2773	3516	4464	3516	3516	4866	4464	3636	200 (D)
2870	2735	2870	2773	3516	4464	3516	3516	4866	4464	3636	
2870	2735	2870	2773	3516	4464	3516	3516	4866	4464	3636	OUTPUT 8.63 rpm
2870	2735	2870	2773	3516	4464	3516	3516	4866	4464	3636	1725 rpm INPUT
2870	2735	2870	2773	3516	4464	3516	3516	4866	4464	3636	300 (D)
2870	2735	2870	2773	3516	4464	3516	3516	4866	4464	3636	
2870	2735	2870	2773	3516	4464	3516	3516	4866	4464	3636	OUTPUT 5.75 rpm
2870	2735	2870	2773	3516	4464	3516	3516	4866	4464	3636	1725 rpm INPUT
2870	2735	2870	2773	3516	4464	3516	3516	4866	4464	3636	500 (D)
2870	2735	2870	2773	3516	4464	3516	3516	4866	4464	3636	
2870	2735	2870	2773	3516	4464	3516	3516	4866	4464	3636	OUTPUT 3.45 rpm
2870	2735	2870	2773	3516	4464	3516	3516	4866	4464	3636	1725 rpm INPUT
2870	2735	2870	2773	3516	4464	3516	3516	4866	4464	3636	750 (D)
2870	2735	2870	2773	3516	4464	3516	3516	4866	4464	3636	
2870	2735	2870	2773	3516	4464	3516	3516	4866	4464	3636	OUTPUT 2.30 rpm
2870	2735	2870	2773	3516	4464	3516	3516	4866	4464	3636	1725 rpm INPUT
2870	2735	2870	2773	3516	4464	3516	3516	4866	4464	3636	1000 (D)
2870	2735	2870	2773	3516	4464	3516	3516	4866	4464	3636	
2870	2735	2870	2773	3516	4464	3516	3516	4866	4464	3636	OUTPUT 1.73 rpm
2870	2735					3516	3516	4866	4464	3636	1725 rpm INPUT
2870	2735					3516	3516	4866	4464	3636	1000 (T)
											OUTPUT 1.73 rpm
2870	2735	2870	2773	3516	4464	3516	3516	4866	4464	3636	1725 rpm INPUT
2870	2735	2870	2773	3516	4464	3516	3516	4866	4464	3636	1500 (D)
2870	2735	2870	2773	3516	4464	3516	3516	4866	4464	3636	
2870	2735	2870	2773	3516	4464	3516	3516	4866	4464	3636	OUTPUT 1.15 rpm
2870	2735					3516	3516	4866	4464	3636	1725 rpm INPUT
2870	2735					3516	3516	4866	4464	3636	1500 (T)
											OUTPUT 1.15 rpm
2870	2735	2870	2773	3516	4464	3516	3516	4866	4464	3636	1725 rpm INPUT
2870	2735	2870	2773	3516	4464	3516	3516	4866	4464	3636	2000 (D)
2870	2735	2870	2773	3516	4464	3516	3516	4866	4464	3636	
2870	2735	2870	2773	3516	4464	3516	3516	4866	4464	3636	OUTPUT 0.863rpm
2870	2735					3516	3516	4866	4464	3636	1725 rpm INPUT
2870	2735					3516	3516	4866	4464	3636	2000 (T)
											OUTPUT 0.863 rpm
2870	2735	2870	2773	3516	4464	3516	3516	4866	4464	3636	1725 rpm INPUT
2870	2735	2870	2773	3516	4464	3516	3516	4866	4464	3636	3000 (D)
2870	2735	2870	2773	3516	4464	3516	3516	4866	4464	3636	
2870	2735	2870	2773	3516	4464	3516	3516	4866	4464	3636	OUTPUT 0.575rpm
2870	2735					3516	3516	4866	4464	3636	1725 rpm INPUT
2870	2735					3516	3516	4866	4464	3636	3000 (T)
											OUTPUT .575 rpm
2870	2735	2870	2773	3516	4464	3516	3516	4866	4464	3636	1725 rpm INPUT
2870	2735	2870	2773	3516	4464	3516	3516	4866	4464	3636	3600 (D)
2870	2735	2870	2773	3516	4464	3516	3516	4866	4464	3636	
2870	2735	2870	2773	3516	4464	3516	3516	4866	4464	3636	OUTPUT 0.479 rpm

***Overhung Load given at one shaft diameter from housing or mounting flange.*

‡ O.H.L. based on maximum bore. Use of smaller diameter shaft may limit O.H.L.

† 8.750" from centerline.

5

DOUBLE AND TRIPLE REDUCTION REDUCER NO. 8

H Double Reduction Series Helical and Worm Gear
D Double Reduction Series Worm Gear
T Triple Reduction Series Worm Gear

All ratings stated are for A.G.M.A. Class 1 service.

OVERALL RATIO	INPUT SPEED R.P.M.	OUTPUT R.P.M.	RATIOS★ DOUBLE 1ST	RATIOS★ DOUBLE 2ND	RATIOS★ TRIPLE 3RD	INPUT H.P.	OUTPUT TORQUE INCH LBS.	GEARMOTOR H.P. @ 1800 / OUTPUT TORQUE INCH LBS.	HORSEPOWER TORQUE AND CBX-CTX CVX-LX INPUT O.H.L.	CBD-CVD SFD-CTD LD INPUT O.H.L.	CTT-CVT SFT INPUT O.H.L.	CBD-CTD CBX-CTX CTT OUTPUT O.H.L.
1725 rpm INPUT 5000 (T) OUTPUT .345 rpm	1800 1200 600 100	0.360 0.240	25	10	20	0.289 0.220	8496 8505	1/3 8496 *			146 146	2870 2870
1725 rpm INPUT 7500 (T) OUTPUT .230 rpm	1800 1200 600 100	0.240 0.160	25	10	30	0.295 0.227	10188 10203	1/3 10188 *			146 146	2870 2870
1725 rpm INPUT 10000 (T) OUTPUT .173 rpm	1800 1200 600 100	0.180 0.120	20	25	20	0.236 0.181	8510 8515	1/4 8510 *			146 146	2870 2870
1725 rpm INPUT 20000 (T) OUTPUT .086 rpm	1800 1200 600 100	0.090 0.060	40	25	20	0.206 0.158	8517 8510	1/4 8517 *			146 146	2870 2870
1725 rpm INPUT 30000 (T) OUTPUT .058 rpm	1800 1200 600 100	0.060 0.040	40	25	30	0.214 0.166	10221 10225	1/4 10221 *			146 146	2870 2870
1725 rpm INPUT 40000 (T) OUTPUT .043 rpm	1800 1200 600 100	0.045 0.030	40	50	20	0.190 0.147	8520 8521	1/6 5992			146 146	2870 2870
1725 rpm INPUT 50000 (T) OUTPUT .035 rpm	1800 1200 600 100	0.035 0.024	50	50	20	0.190 0.148	8521 8522	1/6 6173			146 146	2870 2870
1725 rpm INPUT 60000 (T) OUTPUT 0.029 rpm	1800 1200 600 100	0.030 0.020	40	50	30	0.199 0.155	10226 10228	1/6 6199			146 146	2870 2870
1725 rpm INPUT 75000 (T) OUTPUT 0.023 rpm	1800 1200 600 100	0.024 0.016	50	50	30	0.200 0.157	10227 10229	1/6 6314			146 146	2870 2870
1725 rpm INPUT 80000 (T) OUTPUT 0.022 rpm	1800 1200 600 100	0.023 0.015	40	50	40 (39)	0.175 0.135	7900 7900	1/6 7621			146 146	2870 2870
1725 rpm INPUT 90000 (T) OUTPUT 0.019 rpm	1800 1200 600 100	0.020 0.013	60	50	30	0.180 0.139	10228 9954	1/6 9598			146 146	2870 2870
1725 rpm INPUT 100000 (T) OUTPUT .017 rpm	1800 1200 600 100	0.018 0.012	50	50	40 (39)	0.175 0.136	7900 7900	1/6 7752			146 146	2870 2870
1725 rpm INPUT 150000 (T) OUTPUT .012 rpm	1800 1200 600 100	0.012 0.008	50	60	50 (51)	0.169 0.131	7180 7180	1/6 7180			146 146	2870 2870
1725 rpm INPUT 180000 (T) OUTPUT .010 rpm	1800 1200 600 100	0.010 0.007	60	60	50 (51)	0.155 0.119	7180 7180	1/6 7180 *			146 146	2870 2870

★*Numbers shown in ( ) are exact ratios.*

**Motor H.P. exceeds reducer capacity. Output must be limited to torque shown.*

H Center Distance: Primary (Helical) 1.875" Secondary (Worm) 4.6"
D Center Distance: Primary 2.625" Secondary 4.6"
Maximum NEMA Motor Frame Size: 184C - 145TC Flange.
T Center Distance: Primary 1.333" Secondary 2.625" Third 4.6"
Maximum NEMA Motor Frame Size: 56C Flange.

REDUCER NO.
8

OVERHUNG LOAD RATINGS

**OVERHUNG AND THRUST LOAD-SHAFTS (INCLUDES MOTORIZED WHERE APPLICABLE)

CVX — CVD CVT		LD - LX		LD - LX		CVX-CVD-CVT		SFD-SFT-STD			OVERALL RATIO
OUTPUT O.H.L.		OUTPUT O.H.L.									
UP	DOWN	UP	DOWN	OUTPUT THRUST DOWN	OUTPUT THRUST UP	OUTPUT THRUST DOWN	OUTPUT THRUST UP	OUTPUT THRUST TOWARDS BASE	OUTPUT THRUST AWAY FROM BASE	OUTPUT O.H.L. ‡ †	
2870 2870	2735 2735					3516 3516	3516 3516	4866 4866	4464 4464	3636 3636	1725 rpm INPUT 5000 (T) OUTPUT .345 rpm
2870 2870	2735 2735					3516 3516	3516 3516	4866 4866	4464 4464	3636 3636	1725 rpm INPUT 7500 (T) OUTPUT .230 rpm
2870 2870	2735 2735					3516 3516	3516 3516	4866 4866	4464 4464	3636 3636	1725 rpm INPUT 10000 (T) OUTPUT .173 rpm
2870 2870	2735 2735					3516 3516	3516 3516	4866 4866	4464 4464	3636 3636	1725 rpm INPUT 20000 (T) OUTPUT .086 rpm
2870 2870	2735 2735					3516 3516	3516 3516	4866 4866	4464 4464	3636 3636	1725 rpm INPUT 30000 (T) OUTPUT .058 rpm
2870 2870	2735 2735					3516 3516	3516 3516	4866 4866	4464 4464	3636 3636	1725 rpm INPUT 40000 (T) OUTPUT .043 rpm
2870 2870	2735 2735					3516 3516	3516 3516	4866 4866	4464 4464	3636 3636	1725 rpm INPUT 50000 (T) OUTPUT .035 rpm
2870 2870	2735 2735					3516 3516	3516 3516	4866 4866	4464 4464	3636 3636	1725 rpm INPUT 60000 (T) OUTPUT 0.029 rpm
2870 2870	2735 2735					3516 3516	3516 3516	4866 4866	4464 4464	3636 3636	1725 rpm INPUT 75000 (T) OUTPUT 0.023 rpm
2870 2870	2735 2735					3516 3516	3516 3516	4866 4866	4464 4464	3636 3636	1725 rpm INPUT 80000 (T) OUTPUT 0.022 rpm
2870 2870	2735 2735					3516 3516	3516 3516	4866 4866	4464 4464	3636 3636	1725 rpm INPUT 90000 (T) OUTPUT 0.019 rpm
2870 2870	2735 2735					3516 3516	3516 3516	4866 4866	4464 4464	3636 3636	1725 rpm INPUT 100000 (T) OUTPUT .017 rpm
2870 2870	2735 2735					3516 3516	3516 3516	4866 4866	4464 4464	3636 3636	1725 rpm INPUT 150000 (T) OUTPUT .012 rpm
2870 2870	2735 2735					3516 3516	3516 3516	4866 4866	4464 4464	3636 3636	1725 rpm INPUT 180000 (T) OUTPUT .010 rpm

***Overhung Load given at one shaft diameter from housing or mounting flange.*

‡ O.H.L. based on maximum bore. Use of smaller diameter shaft may limit O.H.L.

† 8.750" from centerline.

5

DOUBLE AND TRIPLE REDUCTION REDUCER NO. 9

H Double Reduction Series Helical and Worm Gear
D Double Reduction Series Worm Gear
T Triple Reduction Series Worm Gear

All ratings stated are for A.G.M.A. Class 1 service.

OVERALL RATIO	INPUT SPEED R.P.M.	OUTPUT R.P.M.	RATIOS★ DOUBLE 1ST	RATIOS★ DOUBLE 2ND	RATIOS★ TRIPLE 3RD	INPUT H.P.	OUTPUT TORQUE INCH LBS.	GEARMOTOR H.P. @ 1800 / OUTPUT TORQUE INCH LBS.	HORSEPOWER TORQUE AND CBX-CTX CVX-LX INPUT O.H.L.	CBD-CVD SFD-CTD LD INPUT O.H.L.	CTT-CVT SFT INPUT O.H.L.	CBD-CTD CBX-CTX CTT OUTPUT O.H.L.
1725 rpm INPUT 50 (H) OUTPUT 34.50 rpm	1800	36.00	2	25		5.76	7795		230			2713
	1200	24.00				3.97	7800		230			2713
	600	12.00				2.13	7800		230			2713
	100	2.00				0.45	7800		230			2713
1725 rpm INPUT 50 (D) OUTPUT 34.50 rpm	1800	36.00	5	10 (10-1/4)		4.45	6113	5 / 6613 *		349		2713
	1200	24.00				3.74	7508			349		2713
	600	12.00				2.60	9862			349		2713
	100	2.00				0.56	9862			349		2713
1725 rpm INPUT 60 (H) OUTPUT 28.75 rpm	1800	30.00	2	30		5.16	7476		230			2713
	1200	20.00				3.93	8200		230			2713
	600	10.00				2.16	8200		230			2713
	100	1.67				0.49	8200		230			2713
1725 rpm INPUT 75 (H) OUTPUT 23.00 rpm	1800	24.00	3	25		3.68	7200		230			2713
	1200	16.00				2.55	7200		230			2713
	600	8.00				1.38	7200		230			2713
	100	1.33				0.29	7200		230			2713
1725 rpm INPUT 75 (D) OUTPUT 23.00 rpm	1800	24.00	5	15 (14-1/2)		4.45	7985	5 / 7985 *		349		2713
	1200	16.00				3.74	9689			349		2713
	600	8.00				2.39	11388			349		2713
	100	1.33				0.55	11388			349		2713
1725 rpm INPUT 80 (H) OUTPUT 21.56 rpm	1800	22.50	2	40 (41)		3.98	7713		230			2713
	1200	15.00				3.30	9307		230			2713
	600	7.50				1.93	9909		230			2713
	100	1.25				0.44	9909		230			2713
1725 rpm INPUT 90 (H) OUTPUT 19.17 rpm	1800	20.00	3	30		3.75	7800		230			2713
	1200	13.33				2.63	7800		230			2713
	600	6.67				1.46	7800		230			2713
	100	1.11				0.33	7800		230			2713
1725 rpm INPUT 100 (H) OUTPUT 17.25 rpm	1800	18.00	2	50		3.31	7457		230			2713
	1200	12.00				2.72	8869		230			2713
	600	6.00				1.61	9439		230			2713
	100	1.00				0.37	9439		230			2713
1725 rpm INPUT 100 (D) OUTPUT 17.25 rpm	1800	18.00	5	20		4.04	9903	5 / 9903 *		349		2713
	1200	12.00				2.85	9903			349		2713
	600	6.00				1.58	9903			349		2713
	100	1.00				0.38	9903			349		2713
1725 rpm INPUT 120 (H) OUTPUT 14.38 rpm	1800	15.00	3	40 (41)		3.30	9307		230			2713
	1200	10.00				2.46	9909		230			2713
	600	5.00				1.37	9909		230			2713
	100	0.83				0.31	9909		230			2713
1725 rpm INPUT 150 (H) OUTPUT 11.50 rpm	1800	12.00	3	50		2.72	8869		230			2713
	1200	8.00				2.04	9439		230			2713
	600	4.00				1.15	9439		230			2713
	100	0.667				0.27	9439		230			2713
1725 rpm INPUT 150 (D) OUTPUT 11.50 rpm	1800	12.00	5	30		3.70	11388	3 / 9008		349		2713
	1200	8.00				2.65	11388			349		2713
	600	4.00				1.52	11388			349		2713
	100	0.67				0.40	11388			349		2713
1725 rpm INPUT 180 (H) OUTPUT 9.58 rpm	1800	10.00	3	60		2.18	8130		230			2713
	1200	6.67				1.67	8864		230			2713
	600	3.33				0.95	8864		230			2713
	100	0.56				0.22	8864		230			2713

★*Numbers shown in ( ) are exact ratios.*

**Motor H.P. exceeds reducer capacity. Output must be limited to torque shown.*

H Center Distance: Primary (Helical) 1.875" Secondary (Worm) 5.167"
D Center Distance: Primary 2.625" Secondary 5.167"
Maximum NEMA Motor Frame Size: 184C - 145TC Flange.
T Center Distance: Primary 1.333" Secondary 2.625" Third 5.167"
Maximum NEMA Motor Frame Size: 56C Flange.

REDUCER NO. 9

OVERHUNG LOAD RATINGS

**OVERHUNG AND THRUST LOAD-SHAFTS (INCLUDES MOTORIZED WHERE APPLICABLE)

CVX — CVD CVT		LD - LX		LD - LX		CVX-CVD-CVT		SFD-SFT-STD			OVERALL RATIO
OUTPUT O.H.L.		OUTPUT O.H.L.									
UP	DOWN	UP	DOWN	OUTPUT THRUST DOWN	OUTPUT THRUST UP	OUTPUT THRUST DOWN	OUTPUT THRUST UP	OUTPUT THRUST TOWARDS BASE	OUTPUT THRUST AWAY FROM BASE	OUTPUT O.H.L. ‡ †	
2713	2670	4050	3372	4307	4848	4270	3920				1725 rpm INPUT
2713	2670	4050	3372	4464	4848	4843	3920				50 (H)
2713	2670	4050	3372	4464	4848	5689	3920				
2713	2670	4050	3372	4464	4848	5689	3920				OUTPUT 34.50 rpm
2713	2670	4050	3372	3759	4502	3674	3662	5050	4848	3636	1725 rpm INPUT
2713	2670	4050	3372	4445	4848	4357	3920	5050	4848	3636	50 (D)
2713	2670	4050	3372	4464	4848	5689	3920	5050	4848	3636	
2713	2670	4050	3372	4464	4848	5689	3920	5050	4848	3636	OUTPUT 34.50 rpm
2713	2670	4050	3372	4464	4848	4730	3920				1725 rpm INPUT
2713	2670	4050	3372	4464	4848	5239	3920				60 (H)
2713	2670	4050	3372	4464	4848	5689	3920				
2713	2670	4050	3372	4464	4848	5689	3920				OUTPUT 28.75 rpm
2713	2670	4050	3372	4464	4848	4843	3920				1725 rpm INPUT
2713	2670	4050	3372	4464	4848	5616	3920				75 (H)
2713	2670	4050	3372	4464	4848	5689	3920				
2713	2670	4050	3372	4464	4848	5689	3920				OUTPUT 23.00 rpm
2713	2670	4050	3372	4464	4848	4479	3920	5050	4848	3636	1725 rpm INPUT
2713	2670	4050	3372	4464	4848	5239	3920	5050	4848	3636	75 (D)
2713	2670	4050	3372	4464	4848	5689	3920	5050	4848	3636	
2713	2670	4050	3372	4464	4848	5689	3920	5050	4848	3636	OUTPUT 23.00 rpm
2713	2670	4050	3372	4464	4848	5321	3920				1725 rpm INPUT
2713	2670	4050	3372	4464	4848	5689	3920				80 (H)
2713	2670	4050	3372	4464	4848	5689	3920				
2713	2670	4050	3372	4464	4848	5689	3920				OUTPUT 21.56 rpm
2713	2670	4050	3372	4464	4848	5239	3920				1725 rpm INPUT
2713	2670	4050	3372	4464	4848	5689	3920				90 (H)
2713	2670	4050	3372	4464	4848	5689	3920				
2713	2670	4050	3372	4464	4848	5689	3920				OUTPUT 19.17 rpm
2713	2670	4050	3372	4464	4848	5689	3920				1725 rpm INPUT
2713	2670	4050	3372	4464	4848	5689	3920				100 (H)
2713	2670	4050	3372	4464	4848	5689	3920				
2713	2670	4050	3372	4464	4848	5689	3920				OUTPUT 17.25 rpm
2713	2670	4050	3372	4464	4848	5362	3920	5050	4848	3636	1725 rpm INPUT
2713	2670	4050	3372	4464	4848	5689	3920	5050	4848	3636	100 (D)
2713	2670	4050	3372	4464	4848	5689	3920	5050	4848	3636	
2713	2670	4050	3372	4464	4848	5689	3920	5050	4848	3636	OUTPUT 17.25 rpm
2713	2670	4050	3372	4464	4848	5689	3920				1725 rpm INPUT
2713	2670	4050	3372	4464	4848	5689	3920				120 (H)
2713	2670	4050	3372	4464	4848	5689	3920				
2713	2670	4050	3372	4464	4848	5689	3920				OUTPUT 14.38 rpm
2713	2670	4050	3372	4464	4848	5689	3920				1725 rpm INPUT
2713	2670	4050	3372	4464	4848	5689	3920				150 (H)
2713	2670	4050	3372	4464	4848	5689	3920				
2713	2670	4050	3372	4464	4848	5689	3920				OUTPUT 11.50 rpm
2713	2670	4050	3372	4464	4848	5689	3920	5050	4848	3636	1725 rpm INPUT
2713	2670	4050	3372	4464	4848	5689	3920	5050	4848	3636	150 (D)
2713	2670	4050	3372	4464	4848	5689	3920	5050	4848	3636	
2713	2670	4050	3372	4464	4848	5689	3920	5050	4848	3636	OUTPUT 11.50 rpm
2713	2670	4050	3372	4464	4848	5689	3920				1725 rpm INPUT
2713	2670	4050	3372	4464	4848	5689	3920				180 (H)
2713	2670	4050	3372	4464	4848	5689	3920				
2713	2670	4050	3372	4464	4848	5689	3920				OUTPUT 9.58 rpm

***Overhung Load given at one shaft diameter from housing or mounting flange.*

‡ O.H.L. based on maximum bore. Use of smaller diameter shaft may limit O.H.L.

† 10.438" from centerline.

5

DOUBLE AND TRIPLE REDUCTION REDUCER NO. 9

H Double Reduction Series Helical and Worm Gear
D Double Reduction Series Worm Gear
T Triple Reduction Series Worm Gear

All ratings stated are for A.G.M.A. Class 1 service.

HORSEPOWER TORQUE AND

OVERALL RATIO	INPUT SPEED R.P.M.	OUTPUT R.P.M.	RATIOS★ DOUBLE 1ST	RATIOS★ DOUBLE 2ND	RATIOS★ TRIPLE 3RD	INPUT H.P.	OUTPUT TORQUE INCH LBS.	GEARMOTOR H.P. @ 1800 / OUTPUT TORQUE INCH LBS.	CBX-CTX CVX-LX INPUT O.H.L.	CBD-CVD SFD-CTD LD INPUT O.H.L.	CTT-CVT SFT INPUT O.H.L.	CBD-CTD CBX-CTX CTT OUTPUT O.H.L.
1725 rpm INPUT 200 (D) OUTPUT 8.62 rpm	1800	9.00	10	20		2.27	9903	2 / 8532		349		2713
	1200	6.00				1.62	9903			349		2713
	600	3.00				0.92	9903			349		2713
	100	0.50				0.23	9903			349		2713
1725 rpm INPUT 300 (D) OUTPUT 5.75 rpm	1800	6.00	10	30		2.15	11388	2 / 10456		349		2713
	1200	4.00				1.56	11388			349		2713
	600	2.00				0.92	11388			349		2713
	100	0.33				0.25	11388			349		2713
1725 rpm INPUT 500 (D) OUTPUT 3.45 rpm	1800	3.60	20	25		1.25	10550	1-1/2 / 10550 *		349		2713
	1200	2.40				0.92	10550			349		2713
	600	1.20				0.54	10550			349		2713
	100	0.20				0.15	10550			349		2713
1725 rpm INPUT 750 (D) OUTPUT 2.30 rpm	1800	2.40	25	30		1.15	11388	1-1/2 / 11388 *		349		2713
	1200	1.60				0.86	11388			349		2713
	600	0.80				0.52	11388			349		2713
	100	0.13				0.16	11388			349		2713
1725 rpm INPUT 1000 (D) OUTPUT 1.72 rpm	1800	1.80	40	25		0.84	10550	1 / 10550 *		349		2713
	1200	1.20				0.63	10550			349		2713
	600	0.60				0.39	10550			349		2713
	100	0.10				0.13	10550			349		2713
1725 rpm INPUT 1000 (T) OUTPUT 1.72 rpm	1800	1.80	5	10	20	0.72	9903	3/4 / 9903 *			146	2713
	1200	1.20				0.52	9903				146	2713
	600											
	100											
1725 rpm INPUT 1500 (D) OUTPUT 1.15 rpm	1800	1.20	50	30		0.82	11388	3/4 / 10037		349		2713
	1200	0.80				0.61	11388			349		2713
	600	0.40				0.41	11388			349		2713
	100	0.07				0.12	10170			349		2713
1725 rpm INPUT 1500 (T) OUTPUT 1.15 rpm	1800	1.20	5	10	30	0.70	11388	3/4 / 11388 *			146	2713
	1200	0.80				0.52	11388				146	2713
	600											
	100											
1725 rpm INPUT 2000 (D) OUTPUT .863 rpm	1800	0.900	40	50		0.591	9439	1/2 / 7156		349		2713
	1200	0.600				0.451	9439			349		2713
	600	0.300				0.292	9439			349		2713
	100	0.050				0.103	9439			349		2713
1725 rpm INPUT 2000 (T) OUTPUT .863 rpm	1800	0.900	10	10	20	0.481	9903	1/2 / 9903 *			146	2713
	1200	0.600				0.359	9903				146	2713
	600											
	100											
1725 rpm INPUT 3000 (D) OUTPUT .575 rpm	1800	0.600	50	60		0.483	8864	1/2 / 8864 *		349		2713
	1200	0.400				0.355	8864			349		2713
	600	0.200				0.246	8864			349		2713
	100	0.033				0.078	8864			349		2713
1725 rpm INPUT 3000 (T) OUTPUT .575 rpm	1800	0.600	10	10	30	0.484	11388	1/2 / 11388 *			146	2713
	1200	0.400				0.367	11388				146	2713
	600											
	100											
1725 rpm INPUT 3600 (D) OUTPUT .479 rpm	1800	0.500	60	60		0.430	8864	1/2 / 8864 *		349		2713
	1200	0.333				0.335	8864			349		2713
	600	0.167				0.220	8864			349		2713
	100	0.028				0.075	8864			349		2713

★*Numbers shown in ( ) are exact ratios.*

**Motor H.P. exceeds reducer capacity. Output must be limited to torque shown.*

H Center Distance: Primary (Helical) 1.875" Secondary (Worm) 5.167"
D Center Distance: Primary 2.625" Secondary 5.167"
Maximum NEMA Motor Frame Size: 184C - 145TC Flange.
T Center Distance: Primary 1.333" Secondary 2.625" Third 5.167"
Maximum NEMA Motor Frame Size: 56C Flange.

REDUCER NO.
9

OVERHUNG LOAD RATINGS

**OVERHUNG AND THRUST LOAD-SHAFTS (INCLUDES MOTORIZED WHERE APPLICABLE)

CVX — CVD CVT		LD - LX		LD - LX		CVX-CVD-CVT		SFD-SFT-STD			OVERALL RATIO
OUTPUT O.H.L.		OUTPUT O.H.L.									
UP	DOWN	UP	DOWN	OUTPUT THRUST DOWN	OUTPUT THRUST UP	OUTPUT THRUST DOWN	OUTPUT THRUST UP	OUTPUT THRUST TOWARDS BASE	OUTPUT THRUST AWAY FROM BASE	OUTPUT O.H.L. ‡ †	
2713	2670	4050	3372	4464	4848	5689	3920	5050	4848	3636	1725 rpm INPUT 200 (D) OUTPUT 8.62 rpm
2713	2670	4050	3372	4464	4848	5689	3920	5050	4848	3636	
2713	2670	4050	3372	4464	4848	5689	3920	5050	4848	3636	
2713	2670	4050	3372	4464	4848	5689	3920	5050	4848	3636	
2713	2670	4050	3372	4464	4848	5689	3920	5050	4848	3636	1725 rpm INPUT 300 (D) OUTPUT 5.75 rpm
2713	2670	4050	3372	4464	4848	5689	3920	5050	4848	3636	
2713	2670	4050	3372	4464	4848	5689	3920	5050	4848	3636	
2713	2670	4050	3372	4464	4848	5689	3920	5050	4848	3636	
2713	2670	4050	3372	4464	4848	5689	3920	5050	4848	3636	1725 rpm INPUT 500 (D) OUTPUT 3.45 rpm
2713	2670	4050	3372	4464	4848	5689	3920	5050	4848	3636	
2713	2670	4050	3372	4464	4848	5689	3920	5050	4848	3636	
2713	2670	4050	3372	4464	4848	5689	3920	5050	4848	3636	
2713	2670	4050	3372	4464	4848	5689	3920	5050	4848	3636	1725 rpm INPUT 750 (D) OUTPUT 2.30 rpm
2713	2670	4050	3372	4464	4848	5689	3920	5050	4848	3636	
2713	2670	4050	3372	4464	4848	5689	3920	5050	4848	3636	
2713	2670	4050	3372	4464	4848	5689	3920	5050	4848	3636	
2713	2670	4050	3372	4464	4848	5689	3920	5050	4848	3636	1725 rpm INPUT 1000 (D) OUTPUT 1.72 rpm
2713	2670	4050	3372	4464	4848	5689	3920	5050	4848	3636	
2713	2670	4050	3372	4464	4848	5689	3920	5050	4848	3636	
2713	2670	4050	3372	4464	4848	5689	3920	5050	4848	3636	
2713	2670					5689	3920	5050	4848	3636	1725 rpm INPUT 1000 (T) OUTPUT 1.72 rpm
2713	2670					5689	3920	5050	4848	3636	
2713	2670	4050	3372	4464	4848	5689	3920	5050	4848	3636	1725 rpm INPUT 1500 (D) OUTPUT 1.15 rpm
2713	2670	4050	3372	4464	4848	5689	3920	5050	4848	3636	
2713	2670	4050	3372	4464	4848	5689	3920	5050	4848	3636	
2713	2670	4050	3372	4464	4848	5689	3920	5050	4848	3636	
2713	2670					5689	3920	5050	4848	3636	1725 rpm INPUT 1500 (T) OUTPUT 1.15 rpm
2713	2670					5689	3920	5050	4848	3636	
2713	2670	4050	3372	4464	4848	5689	3920	5050	4848	3636	1725 rpm INPUT 2000 (D) OUTPUT .863 rpm
2713	2670	4050	3372	4464	4848	5689	3920	5050	4848	3636	
2713	2670	4050	3372	4464	4848	5689	3920	5050	4848	3636	
2713	2670	4050	3372	4464	4848	5689	3920	5050	4848	3636	
2713	2670					5689	3920	5050	4848	3636	1725 rpm INPUT 2000 (T) OUTPUT .863 rpm
2713	2670					5689	3920	5050	4848	3636	
2713	2670	4050	3372	4464	4848	5689	3920	5050	4848	3636	1725 rpm INPUT 3000 (D) OUTPUT .575 rpm
2713	2670	4050	3372	4464	4848	5689	3920	5050	4848	3636	
2713	2670	4050	3372	4464	4848	5689	3920	5050	4848	3636	
2713	2670	4050	3372	4464	4848	5689	3920	5050	4848	3636	
2713	2670					5689	3920	5050	4848	3636	1725 rpm INPUT 3000 (T) OUTPUT .575 rpm
2713	2670					5689	3920	5050	4848	3636	
2713	2670	4050	3372	4464	4848	5689	3920	5050	4848	3636	1725 rpm INPUT 3600 (D) OUTPUT .479 rpm
2713	2670	4050	3372	4464	4848	5689	3920	5050	4848	3636	
2713	2670	4050	3372	4464	4848	5689	3920	5050	4848	3636	
2713	2670	4050	3372	4464	4848	5689	3920	5050	4848	3636	

***Overhung Load given at one shaft diameter from housing or mounting flange.*

‡ O.H.L. based on maximum bore. Use of smaller diameter shaft may limit O.H.L.

† 10.438" from centerline.

5

DOUBLE AND TRIPLE REDUCTION REDUCER NO. 9

H Double Reduction Series Helical and Worm Gear
D Double Reduction Series Worm Gear
T Triple Reduction Series Worm Gear

All ratings stated are for A.G.M.A. Class 1 service.

HORSEPOWER TORQUE AND

OVERALL RATIO	INPUT SPEED R.P.M.	OUTPUT R.P.M.	RATIOS★ DOUBLE 1ST	RATIOS★ DOUBLE 2ND	RATIOS★ TRIPLE 3RD	INPUT H.P.	OUTPUT TORQUE INCH LBS.	GEARMOTOR H.P. @ 1800 / OUTPUT TORQUE INCH LBS.	CBX-CTX CVX-LX INPUT O.H.L.	CBD-CVD SFD-CTD LD INPUT O.H.L.	CTT-CVT SFT INPUT O.H.L.	CBD-CTD CBX-CTX CTT OUTPUT O.H.L.
1725 rpm INPUT 5000 (T) OUTPUT .345 rpm	1800 1200 600 100	0.360 0.240	10	20	25	0.340 0.260	10550 10550	1/3 10133			146 146	2713 2713
1725 rpm INPUT 7500 (T) OUTPUT .230 rpm	1800 1200 600 100	0.240 0.160	10	25	30	0.334 0.259	11388 11388	1/3 11350			146 146	2713 2713
1725 rpm INPUT 10000 (T) OUTPUT .173 rpm	1800 1200 600 100	0.180 0.120	20	20	25	0.270 0.208	10550 10550	1/4 8796			146 146	2713 2713
1725 rpm INPUT 20000 (T) OUTPUT .086 rpm	1800 1200 600 100	0.090 0.060	40	20	25	0.232 0.179	10550 10550	1/4 10550 *			146 146	2713 2713
1725 rpm INPUT 30000 (T) OUTPUT .058 rpm	1800 1200 600 100	0.060 0.040	40	25	30	0.237 0.184	11380 11270	1/4 11380 *			146 146	2713 2713
1725 rpm INPUT 40000 (T) OUTPUT .043 rpm	1800 1200 600 100	0.045 0.030	40	40	25	0.211 0.165	10550 10550	1/4 10550 *			146 146	2713 2713
1725 rpm INPUT 50000 (T) OUTPUT .035 rpm	1800 1200 600 100	0.036 0.024	50	40	25	0.212 0.167	10550 10550	1/4 10550 *			146 146	2713 2713
1725 rpm INPUT 60000 (T) OUTPUT .029 rpm	1800 1200 600 100	0.030 0.020	60	40	25	0.189 0.148	10550 10550	1/6 8429			146 146	2713 2713
1725 rpm INPUT 75000 (T) OUTPUT .023 rpm	1800 1200 600 100	0.024 0.016	25	50	60	0.180 0.140	8864 8864	1/6 5854			146 146	2713 2713
1725 rpm INPUT 80000 (T) OUTPUT .022 rpm	1800 1200 600 100	0.023 0.015	40	40	50	0.189 0.147	9439 9439	1/6 6700			146 146	2713 2713
1725 rpm INPUT 90000 (T) OUTPUT .019 rpm	1800 1200 600 100	0.020 0.013	30	50	60	0.172 0.133	8864 8864	1/6 7665			146 146	2713 2713
1725 rpm INPUT 100000 (T) OUTPUT .017 rpm	1800 1200 600 100	0.018 0.012	50	40	50	0.190 0.149	9439 9439	1/6 6825			146 146	2713 2713
1725 rpm INPUT 150000 (T) OUTPUT .012 rpm	1800 1200 600 100	0.012 0.008	50	50	60	0.173 0.135	8864 8864	1/6 8864			146 146	2713 2713
1725 rpm INPUT 180000 (T) OUTPUT .010 rpm	1800 1200 600 100	0.010 0.007	60	50	60	0.158 0.094	8864 8864	1/6 8864 *			146 146	2713 2713

★*Numbers shown in ( ) are exact ratios.*

**Motor H.P. exceeds reducer capacity. Output must be limited to torque shown.*

H Center Distance: Primary (Helical) 1.875" Secondary (Worm) 5.167"
D Center Distance: Primary 2.625" Secondary 5.167"
Maximum NEMA Motor Frame Size: 184C - 145TC Flange.
T Center Distance: Primary 1.333" Secondary 2.625" Third 5.167"
Maximum NEMA Motor Frame Size: 56C Flange.

REDUCER NO.
9

OVERHUNG LOAD RATINGS

**OVERHUNG AND THRUST LOAD-SHAFTS (INCLUDES MOTORIZED WHERE APPLICABLE)

CVX — CVD CVT		LD - LX		LD - LX		CVX-CVD-CVT		SFD-SFT-STD			OVERALL RATIO
OUTPUT O.H.L.		OUTPUT O.H.L.									
UP	DOWN	UP	DOWN	OUTPUT THRUST DOWN	OUTPUT THRUST UP	OUTPUT THRUST DOWN	OUTPUT THRUST UP	OUTPUT THRUST TOWARDS BASE	OUTPUT THRUST AWAY FROM BASE	OUTPUT O.H.L. ‡ †	
2713 2713	2670 2670					5689 5689	3920 3920	5050 5050	4848 4848	3636 3636	1725 rpm INPUT 5000 (T) OUTPUT .345 rpm
2713 2713	2670 2670					5689 5689	3920 3920	5050 5050	4848 4848	3636 3636	1725 rpm INPUT 7500 (T) OUTPUT .230 rpm
2713 2713	2670 2670					5689 5689	3920 3920	5050 5050	4848 4848	3636 3636	1725 rpm INPUT 10000 (T) OUTPUT .173 rpm
2713 2713	2670 2670					5689 5689	3920 3920	5050 5050	4848 4848	3636 3636	1725 rpm INPUT 20000 (T) OUTPUT .086 rpm
2713 2713	2670 2670					5689 5689	3920 3920	5050 5050	4848 4848	3636 3636	1725 rpm INPUT 30000 (T) OUTPUT .058 rpm
2713 2713	2670 2670					5689 5689	3920 3920	5050 5050	4848 4848	3636 3636	1725 rpm INPUT 40000 (T) OUTPUT .043 rpm
2713 2713	2670 2670					5689 5689	3920 3920	5050 5050	4848 4848	3636 3636	1725 rpm INPUT 50000 (T) OUTPUT .035 rpm
2713 2713	2670 2670					5689 5689	3920 3920	5050 5050	4848 4848	3636 3636	1725 rpm INPUT 60000 (T) OUTPUT .029 rpm
2713 2713	2670 2670					5689 5689	3920 3920	5050 5050	4848 4848	3636 3636	1725 rpm INPUT 75000 (T) OUTPUT .023 rpm
2713 2713	2670 2670					5689 5689	3920 3920	5050 5050	4848 4848	3636 3636	1725 rpm INPUT 80000 (T) OUTPUT .022 rpm
2713 2713	2670 2670					5689 5689	3920 3920	5050 5050	4848 4848	3636 3636	1725 rpm INPUT 90000 (T) OUTPUT .019 rpm
2713 2713	2670 2670					5689 5689	3920 3920	5050 5050	4848 4848	3636 3636	1725 rpm INPUT 100000 (T) OUTPUT .017 rpm
2713 2713	2670 2670					5689 5689	3920 3920	5050 5050	4848 4848	3636 3636	1725 rpm INPUT 150000 (T) OUTPUT .012 rpm
2713 2713	2670 2670					5689 5689	3920 3920	5050 5050	4848 4848	3636 3636	1725 rpm INPUT 180000 (T) OUTPUT .010 rpm

***Overhung Load given at one shaft diameter from housing or mounting flange.*

‡ O.H.L. based on maximum bore. Use of smaller diameter shaft may limit O.H.L.

† 10.438" from centerline.

5

DOUBLE AND TRIPLE REDUCTION REDUCER NO. 10

H Double Reduction Series Helical and Worm Gear
D Double Reduction Series Worm Gear
T Triple Reduction Series Worm Gear

All ratings stated are for A.G.M.A. Class 1 service.

HORSEPOWER TORQUE AND

OVERALL RATIO	INPUT SPEED R.P.M.	OUTPUT R.P.M.	RATIOS ★ DOUBLE 1ST	RATIOS ★ DOUBLE 2ND	RATIOS ★ TRIPLE 3RD	INPUT H.P.	OUTPUT TORQUE INCH LBS.	GEARMOTOR H.P. @ 1800 / OUTPUT TORQUE INCH LBS.	CBX-CTX CVX-LX INPUT O.H.L.	CBD-CVD SFD-CTD LD INPUT O.H.L.	CTT-CVT SFT INPUT O.H.L.	CBD-CTD CBX-CTX CTT OUTPUT O.H.L.
1725 rpm INPUT 50 (H) OUTPUT 34.50 rpm	1800	36.00	2	25		8.09	10411		414			5607
	1200	24.00				6.93	13022		414			5607
	600	12.00				4.99	17644		414			5607
	100	2.00				1.36	22726		414			5607
1725 rpm INPUT 50 (D) OUTPUT 34.50 rpm	1800	36.00	5 (5-1/5)	10 (10-1/4)		5.90	8656	5 / 7229		412		5607
	1200	24.00				4.93	10602			412		5607
	600	12.00				3.52	14356			412		5607
	100	2.00				0.85	16568			412		5607
1725 rpm INPUT 60 (H) OUTPUT 28.75 rpm	1800	30.00	2	30		6.84	10916		414			5607
	1200	20.00				5.68	13279		414			5607
	600	10.00				3.66	16152		414			5607
	100	1.67				0.89	19016		414			5607
1725 rpm INPUT 75 (H) OUTPUT 23.00 rpm	1800	24.00	3	25		6.93	13022		414			5607
	1200	16.00				5.85	15945		414			5607
	600	8.00				3.85	19524		414			5607
	100	1.33				0.94	19524		414			5607
1725 rpm INPUT 75 (D) OUTPUT 23.00 rpm	1800	24.00	7-1/2 (7-1/5)	10 (10-1/4)		4.95	9792	5 / 9792 *		412		5607
	1200	16.00				4.17	12069			412		5607
	600	8.00				2.83	15419			412		5607
	100	1.33				0.66	16987			412		5607
1725 rpm INPUT 80 (H) OUTPUT 21.56 rpm	1800	22.50	2	40		5.45	10812		414			5607
	1200	15.00				4.55	13157		414			5607
	600	7.50				2.97	16011		414			5607
	100	1.25				0.69	17000		414			5607
1725 rpm INPUT 90 (H) OUTPUT 19.17 rpm	1800	20.00	3	30		5.68	13279		414			5607
	1200	13.33				4.45	15131		414			5607
	600	6.67				2.71	17242		414			5607
	100	1.11				0.64	19212		414			5607
1725 rpm INPUT 100 (H) OUTPUT 17.25 rpm	1800	18.00	2	50		4.46	10414		414			5607
	1200	12.00				3.71	12567		414			5607
	600	6.00				2.40	15000		414			5607
	100	1.00				0.55	15000		414			5607
1725 rpm INPUT 100 (D) OUTPUT 17.25 rpm	1800	18.00	5 (5-1/5)	20 (20-1/2)		5.45	14831	5 / 13511		412		5607
	1200	12.00				4.06	15881			412		5607
	600	6.00				2.38	17008			412		5607
	100	1.00				0.56	17587			412		5607
1725 rpm INPUT 120 (H) OUTPUT 14.37 rpm	1800	15.00	3	40		4.55	13157		414			5607
	1200	10.00				3.59	14997		414			5607
	600	5.00				2.21	17000		414			5607
	100	0.83				0.49	17000		414			5607
1725 rpm INPUT 150 (H) OUTPUT 11.50 rpm	1800	12.00	3	50		3.71	12567		414			5607
	1200	8.00				2.92	14244		414			5607
	600	4.00				1.71	15000		414			5607
	100	0.67				0.39	15000		414			5607
1725 rpm INPUT 150 (D) OUTPUT 11.50 rpm	1800	12.00	5 (5-1/5)	30 (20-1/2)		4.34	15673	5 / 15673 *		412		5607
	1200	8.00				3.29	16899			412		5607
	600	4.00				1.98	18221			412		5607
	100	0.67				0.50	19212			412		5607
1725 rpm INPUT 180 (H) OUTPUT 9.58 rpm	1800	10.00	3	60		3.03	11685		414			5607
	1200	6.67				2.38	13116		414			5607
	600	3.33				1.44	14200		414			5607
	100	0.56				0.34	14200		414			5607

★*Numbers shown in ( ) are exact ratios.*

**Motor H.P. exceeds reducer capacity. Output must be limited to torque shown.*

H Center Distance: Primary (Helical) 3.000" Secondary (Worm) 6.000"
D Center Distance: Primary 3.000" Secondary 6.000"
Maximum NEMA Motor Frame Size: 215C - 184TC Flange.
T Center Distance: Primary 2.000" Secondary 3.000" Third 6.000"
Maximum NEMA Motor Frame Size: 184C - 145TC Flange.

REDUCER NO.
10

OVERHUNG LOAD RATINGS

**OVERHUNG AND THRUST LOAD-SHAFTS (INCLUDES MOTORIZED WHERE APPLICABLE)

CVX — CVD CVT		LD - LX		LD - LX		CVX-CVD-CVT		SFD-SFT-STD			OVERALL RATIO
OUTPUT O.H.L.		OUTPUT O.H.L.									
UP	DOWN	UP	DOWN	OUTPUT THRUST DOWN	OUTPUT THRUST UP	OUTPUT THRUST DOWN	OUTPUT THRUST UP	OUTPUT THRUST TOWARDS BASE	OUTPUT THRUST AWAY FROM BASE	OUTPUT O.H.L. ‡ †	
5607	5438	5222	5767	6237	5952	6195	3920				1725 rpm INPUT
5607	5438	5222	5767	6250	5952	6250	3920				50 (H)
5607	5438	5222	5767	6250	5952	6250	3920				OUTPUT 34.50 rpm
5607	5438	5222	5767	6250	5952	6250	3920				
5607	5438	5222	5767	4871	4772	4674	3920	6100	6100	5436	1725 rpm INPUT
5607	5438	5222	5767	5593	5484	5372	3920	6100	6100	5436	50 (D)
5607	5438	5222	5767	6250	5952	6250	3920	6100	6100	5436	OUTPUT 34.50rpm
5607	5438	5222	5767	6250	5952	6250	3920	6100	6100	5436	
5607	5438	5222	5767	6250	5952	6250	3920				1725 rpm INPUT
5607	5438	5222	5767	6250	5952	6250	3920				60 (H)
5607	5438	5222	5767	6250	5952	6250	3920				OUTPUT 28.75 rpm
5607	5438	5222	5767	6520	5952	6250	3920				
5607	5438	5222	5767	6250	5952	6250	3920				1725 rpm INPUT
5607	5438	5222	5767	6250	5952	6250	3920				75 (H)
5607	5438	5222	5767	6250	5952	6250	3920				OUTPUT 23.00 rpm
5607	5438	5222	5767	6250	5952		3920				
5607	5438	5222	5767	5443	5336	5228	3920	6100	6100	5436	1725 rpm INPUT
5607	5438	5222	5767	6250	5952	6250	3920	6100	6100	5436	75 (D)
5607	5438	5222	5767	6250	5952	6250	3920	6100	6100	5436	OUTPUT 23.00rpm
5607	5438	5222	5767	6250	5952	6250	3920	6100	6100	5436	
5607	5438	5222	5767	6250	5952	6250	3920				1725 rpm INPUT
5607	5438	5222	5767	6250	5952	6250	3920				80 (H)
5607	5438	5222	5767	6250	5952	6250	3920				OUTPUT 21.56 rpm
5607	5438	5222	5767	6250	5952	6250	3920				
5607	5438	5222	5767	6250	5952	6250	3920				1725 rpm INPUT
5607	5438	5222	5767	6250	5952	6250	3920				90 (H)
5607	5438	5222	5767	6250	5952	6250	3920				OUTPUT 19.17 rpm
5607	5438	5222	5767	6250	5952	6250	3920				
5607	5438	5222	5767	6250	5952	6250	3920				1725 rpm INPUT
5607	5438	5222	5767	6250	5952	6250	3920				100 (H)
5607	5438	5222	5767	6250	5952	6250	3920				OUTPUT 17.25 rpm
5607	5438	5222	5767	6250	5952	6250	3920				
5607	5438	5222	5767	6250	5952	6250	3920	6100	6100	5436	1725 rpm INPUT
5607	5438	5222	5767	6250	5952	6250	3920	6100	6100	5436	100 (D)
5607	5438	5222	5767	6250	5952	6250	3920	6100	6100	5436	OUTPUT 17.25rpm
5607	5438	5222	5767	6250	5952	6250	3920	6100	6100	5436	
5607	5438	5222	5767	6250	5952	6250	3920				1725 rpm INPUT
5607	5438	5222	5767	6250	5952	6250	3920				120 (H)
5607	5438	5222	5767	6250	5952	6250	3920				OUTPUT 14.37 rpm
5607	5438	5222	5767	6250	5952	6250	3920				
5607	5438	5222	5767	6250	5952	6250	3920				1725 rpm INPUT
5607	5438	5222	5767	6250	5952	6250	3920				150 (H)
5607	5438	5222	5767	6250	5952	6250	3920				OUTPUT 11.50 rpm
5607	5438	5222	5767	6250	5952	6250	3920				
5607	5438	5222	5767	6250	5952	6250	3920	6100	6100	5436	1725 rpm INPUT
5607	5438	5222	5767	6250	5952	6250	3920	6100	6100	5436	150 (D)
5607	5438	5222	5767	6250	5952	6250	3920	6100	6100	5436	OUTPUT 11.50 rpm
5607	5438	5222	5767	6250	5952	6250	3920	6100	6100	5436	
5607	5438	5222	5767	6250	5952	6250	3920				1725 rpm INPUT
5607	5438	5222	5767	6250	5952	6250	3920				180 (H)
5607	5438	5222	5767	6250	5952	6250	3920				OUTPUT 9.58 rpm
5607	5438	5222	5767	6250	5952	6250	3920				

***Overhung Load given at one shaft diameter from housing or mounting flange.*

‡ O.H.L. based on maximum bore. Use of smaller diameter shaft may limit O.H.L.

† 11.4375" from centerline.

5

DOUBLE AND TRIPLE REDUCTION REDUCER NO. 10

H Double Reduction Series Helical and Worm Gear
D Double Reduction Series Worm Gear
T Triple Reduction Series Worm Gear

All ratings stated are for A.G.M.A. Class 1 service.

HORSEPOWER TORQUE AND

OVERALL RATIO	INPUT SPEED R.P.M.	OUTPUT R.P.M.	RATIOS★ DOUBLE 1ST	RATIOS★ DOUBLE 2ND	RATIOS★ TRIPLE 3RD	INPUT H.P.	OUTPUT TORQUE INCH LBS.	GEARMOTOR H.P. @ 1800 / OUTPUT TORQUE INCH LBS.	CBX-CTX CVX-LX INPUT O.H.L.	CBD-CVD SFD-CTD LD INPUT O.H.L.	CTT-CVT SFT INPUT O.H.L.	CBD-CTD CBX-CTX CTT OUTPUT O.H.L.
1725 rpm INPUT 200 (D) OUTPUT 8.63 rpm	1800	9.00	10 (10-1/3)	20 (20-1/2)		3.33	16424	3 / 14578		412		5607
	1200	6.00				2.43	17001			412		5607
	600	3.00				1.41	17587			412		5607
	100	0.50				0.34	17587			412		5607
1725 rpm INPUT 300 (D) OUTPUT 5.75 rpm	1800	6.00	10 (10-1/3)	30		2.75	17535	3 / 17535 *		412		5607
	1200	4.00				2.03	18213			412		5607
	600	2.00				1.21	18916			412		5607
	100	0.33				0.31	19212			412		5607
1725 rpm INPUT 500 (D) OUTPUT 3.45 rpm	1800	3.60	20	25		2.32	19512	2 / 16393		412		5607
	1200	2.40				1.92	22497			412		5607
	600	1.20				1.17	23191			412		5607
	100	0.02				0.30	20965			412		5607
1725 rpm INPUT 750 (D) OUTPUT 2.30 rpm	1800	2.40	25	30		1.58	18745	1-1/2 / 17535		412		5607
	1200	1.60				1.18	19041			412		5607
	600	0.80				0.72	19212			412		5607
	100	0.13				0.21	19212			412		5607
1725 rpm INPUT 1000 (D) OUTPUT 1.73 rpm	1800	1.80	25	40		1.27	17000	1-1/2 / 17000 *		412		5607
	1200	1.20				0.94	17000			412		5607
	600	0.60				0.58	17000			412		5607
	100	0.10				0.18	17000			412		5607
1725 rpm INPUT 1000 (T) OUTPUT 1.73 rpm	1800	1.80	5	10 (10-1/3)	20 (20-1/2)	1.06	17587	1 / 14746			171	5607
	1200	1.20				0.78	17587				171	5607
	600											
	100											
1725 rpm INPUT 1500 (D) OUTPUT 1.15 rpm	1800	1.20	50	30		1.06	19191	1 / 17854		412		5607
	1200	0.80				0.79	19212			412		5607
	600	0.40				0.50	19212			412		5607
	100	0.07				0.16	19212			412		5607
1725 rpm INPUT 1500 (T) OUTPUT 1.15 rpm	1800	1.20	5	10 (10-1/3)	30	0.93	19205	1 / 19205 *			171	5607
	1200	0.80				0.69	19212				171	5607
	600											
	100											
1725 rpm INPUT 2000 (D) OUTPUT 0.863 rpm	1800	0.900	50	40		0.855	17000	3/4 / 14040		412		5607
	1200	0.600				0.649	17000			412		5607
	600	0.300				0.414	17000			412		5607
	100	0.050				0.317	17000			412		5607
1725 rpm INPUT 2000 (T) OUTPUT 0.863 rpm	1800	0.900	20	5 (5-1/5)	20 (20-1/2)	0.692	17587	1/2 / 10579			171	5607
	1200	0.600				0.517	17587				171	5607
	600											
	100											
1725 rpm INPUT 3000 (D) OUTPUT 0.575 rpm	1800	0.600	60	50		0.663	15000	3/4 / 15000 *		412		5607
	1200	0.400				0.510	15000			412		5607
	600	0.200				0.331	15000			412		5607
	100	0.033				0.115	15000			412		5607
1725 rpm INPUT 3000 (T) OUTPUT 0.575 rpm	1800	0.600	10	10 (10-1/3)	30	0.598	19212	1/2 / 14156			171	5607
	1200	0.400				0.449	19212				171	5607
	600											
	100											
1725 rpm INPUT 3600 (D) OUTPUT 0.479 rpm	1800	0.500	60	60		0.595	14200	1/2 / 10350		412		5607
	1200	0.333				0.460	14200			412		5607
	600	0.167				0.301	14200			412		5607
	100	0.028				0.105	14200			412		5607

★*Numbers shown in ( ) are exact ratios.*

**Motor H.P. exceeds reducer capacity. Output must be limited to torque shown.*

H Center Distance: Primary (Helical) 3.000" Secondary (Worm) 6.000"
D Center Distance: Primary 3.000" Secondary 6.000"
Maximum NEMA Motor Frame Size: 215C - 184TC Flange.
T Center Distance: Primary 2.000" Secondary 3.000" Third 6.000"
Maximum NEMA Motor Frame Size: 184C - 145TC Flange.

REDUCER NO.
10

OVERHUNG LOAD RATINGS

**OVERHUNG AND THRUST LOAD-SHAFTS (INCLUDES MOTORIZED WHERE APPLICABLE)

CVX — CVD CVT		LD - LX		LD - LX		CVX-CVD-CVT		SFD-SFT-STD			OVERALL RATIO
OUTPUT O.H.L.		OUTPUT O.H.L.									
UP	DOWN	UP	DOWN	OUTPUT THRUST DOWN	OUTPUT THRUST UP	OUTPUT THRUST DOWN	OUTPUT THRUST UP	OUTPUT THRUST TOWARDS BASE	OUTPUT THRUST AWAY FROM BASE	OUTPUT O.H.L. ‡ †	
5607	5438	5222	5767	6250	5952	6250	3920	6100	6100	5436	1725 rpm INPUT 200 (D) OUTPUT 8.63 rpm
5607	5438	5222	5767	6250	5952	6250	3920	6100	6100	5436	
5607	5438	5222	5767	6250	5952	6250	3920	6100	6100	5436	
5607	5438	5222	5767	6250	5952	6250	3920	6100	6100	5436	
5607	5438	5222	5767	6250	5952	6250	3920	6100	6100	5436	1725 rpm INPUT 300 (D) OUTPUT 5.75 rpm
5607	5438	5222	5767	6250	5952	6250	3920	6100	6100	5436	
5607	5438	5222	5767	6250	5952	6250	3920	6100	6100	5436	
5607	5438	5222	5767	6250	5952	6250	3920	6100	6100	5436	
5607	5438	5222	5767	6250	5952	6250	3920	6100	6100	5436	1725 rpm INPUT 500 (D) OUTPUT 3.45 rpm
5607	5438	5222	5767	6250	5952	6250	3920	6100	6100	5436	
5607	5438	5222	5767	6250	5952	6250	3920	6100	6100	5436	
5607	5438	5222	5767	6250	5952	6250	3920	6100	6100	5436	
5607	5438	5222	5767	6250	5952	6250	3920	6100	6100	5436	1725 rpm INPUT 750 (D) OUTPUT 2.30 rpm
5607	5438	5222	5767	6250	5952	6250	3920	6100	6100	5436	
5607	5438	5222	5767	6250	5952	6250	3920	6100	6100	5436	
5607	5438	5222	5767	6250	5952	6250	3920	6100	6100	5436	
5607	5438	5222	5767	6250	5952	6250	3920	6100	6100	5436	1725 rpm INPUT 1000 (D) OUTPUT 1.73 rpm
5607	5438	5222	5767	6250	5952	6250	3920	6100	6100	5436	
5607	5438	5222	5767	6250	5952	6250	3920	6100	6100	5436	
5607	5438	5222	5767	6250	5952	6250	3920	6100	6100	5436	
5607	5438					6250	3920	6100	6100	5436	1725 rpm INPUT 1000 (T) OUTPUT 1.73 rpm
5607	5438					6250	3920	6100	6100	5436	
5607	5438	5222	5767	6250	5952	6250	3920	6100	6100	5436	1725 rpm INPUT 1500 (D) OUTPUT 1.15 rpm
5607	5438	5222	5767	6250	5952	6250	3920	6100	6100	5436	
5607	5438	5222	5767	6250	5952	6250	3920	6100	6100	5436	
5607	5438	5222	5767	6250	5952	6250	3920	6100	6100	5436	
5607	5438					6250	3920	6100	6100	5436	1725 rpm INPUT 1500 (T) OUTPUT 1.15 rpm
5607	5438					6250	3920	6100	6100	5436	
5607	5438	5222	5767	6250	5952	6250	3920	6100	6100	5436	1725 rpm INPUT 2000 (D) OUTPUT 0.863 rpm
5607	5438	5222	5767	6250	5952	6250	3920	6100	6100	5436	
5607	5438	5222	5767	6250	5952	6250	3920	6100	6100	5436	
5607	5438	5222	5767	6250	5952	6250	3920	6100	6100	5436	
5607	5438					6250	3920	6100	6100	5436	1725 rpm INPUT 2000 (T) OUTPUT 0.863 rpm
5607	5438					6250	3920	6100	6100	5436	
5607	5438	5222	5767	6250	5952	6250	3920	6100	6100	5436	1725 rpm INPUT 3000 (D) OUTPUT 0.575 rpm
5607	5438	5222	5767	6250	5952	6250	3920	6100	6100	5436	
5607	5438	5222	5767	6250	5952	6250	3920	6100	6100	5436	
5607	5438	5222	5767	6250	5952	6250	3920	6100	6100	5436	
5607	5438					6250	3920	6100	6100	5436	1725 rpm INPUT 3000 (T) OUTPUT 0.575 rpm
5607	5438					6250	3920	6100	6100	5436	
5607	5438	5222	5767	6250	5952	6250	3920	6100	6100	5436	1725 rpm INPUT 3600 (D) OUTPUT 0.479 rpm
5607	5438	5222	5767	6250	5952	6250	3920	6100	6100	5436	
5607	5438	5222	5767	6250	5952	6250	3920	6100	6100	5436	
5607	5438	5222	5767	6250	5952	6250	3920	6100	6100	5436	

***Overhung Load given at one shaft diameter from housing or mounting flange.*

‡ O.H.L. based on maximum bore. Use of smaller diameter shaft may limit O.H.L.

† 11.4375" from centerline.

5

DOUBLE AND TRIPLE REDUCTION REDUCER NO. 10

H Double Reduction Series Helical and Worm Gear
D Double Reduction Series Worm Gear
T Triple Reduction Series Worm Gear

All ratings stated are for A.G.M.A. Class 1 service.

OVERALL RATIO	INPUT SPEED R.P.M.	OUTPUT R.P.M.	RATIOS★ DOUBLE 1ST	RATIOS★ DOUBLE 2ND	RATIOS★ TRIPLE 3RD	INPUT H.P.	OUTPUT TORQUE INCH LBS.	GEARMOTOR H.P. @ 1800 / OUTPUT TORQUE INCH LBS.	HORSEPOWER TORQUE AND CBX-CTX CVX-LX INPUT O.H.L.	CBD-CVD SFD-CTD LD INPUT O.H.L.	CTT-CVT SFT INPUT O.H.L.	CBD-CTD CBX-CTX CTT OUTPUT O.H.L.
1725 rpm INPUT 5000 (T) OUTPUT 0.345 rpm	1800 1200 600 100	0.360 0.240	10	20	25	0.597 0.458	23688 23760	1/2 17782			171 171	5607 5607
1725 rpm INPUT 7500 (T) OUTPUT .230 rpm	1800 1200 600 100	0.240 0.160	15	20	25	0.500 0.388	23760 23809	1/2 23760			171 171	5607 5607
1725 rpm INPUT 10000 (T) OUTPUT .173 rpm	1800 1200 600 100	0.180 0.120	20	20	25	0.446 0.350	23797 23833	1/2 23797 *			171 171	5607 5607
1725 rpm INPUT 20000 (T) OUTPUT 0.086 rpm	1800 1200 600 100	0.090 0.060	40	20	25	0.362 0.283	23851 23166	1/3 23337			171 171	5607 5607
1725 rpm INPUT 30000 (T) OUTPUT .058 rpm	1800 1200 600 100	0.060 0.040	40	30	25	0.338 0.268	23869 23328	1/3 23180			171 171	5607 5607
1725 rpm INPUT 40000 (T) OUTPUT .043 rpm	1800 1200 600 100	0.045 0.030	40	25	40	0.252 0.200	17000 17000	1/4 16585			171 171	5607 5607
1725 rpm INPUT 50000 (T) OUTPUT .035 rpm	1800 1200 600 100	0.036 0.024	50	25	40	0.233 0.185	17000 17000	1/4 17000 *			171 171	5607 5607
1725 rpm INPUT 60000 (T) OUTPUT .029 rpm	1800 1200 600 100	0.030 0.020	40	50	30	0.244 0.195	19212 19212	1/4 19212 *			171 171	5607 5607
1725 rpm INPUT 75000 (T) OUTPUT .023 rpm	1800 1200 600 100	0.024 0.016	50	50	30	0.227 0.181	19212 19212	1/4 19212 *			171 171	5607 5607
1725 rpm INPUT 80000 (T) OUTPUT .022 rpm	1800 1200 600 100	0.023 0.015	40	50	40	0.228 0.181	17000 17000	1/4 17000 *			171 171	5607 5607
1725 rpm INPUT 90000 (T) OUTPUT 0.019 rpm	1800 1200 600 100	0.020 0.013	60	50	30	0.223 0.179	19212 19212	1/4 19212 *			171 171	5607 5607
1725 rpm INPUT 100000 (T) OUTPUT 0.017 rpm	1800 1200 600 100	0.018 0.012	50	50	40	0.213 0.170	17000 17000	1/4 17000 *			171 171	5607 5607
1725 rpm INPUT 150000 (T) OUTPUT 0.012 rpm	1800 1200 600 100	0.012 0.008	50	60	50	0.199 0.158	15000 15000	1/4 15000 *			171 171	5607 5607
1725 rpm INPUT 180000 (T) OUTPUT 0.010 rpm	1800 1200 600 100	0.010 0.007	60	60	50	0.196 0.157	15000 15000	1/4 15000 *			171 171	5607 5607

★*Numbers shown in ( ) are exact ratios.*

**Motor H.P. exceeds reducer capacity. Output must be limited to torque shown.*

H Center Distance: Primary (Helical) 3.000" Secondary (Worm) 6.000"
D Center Distance: Primary 3.000" Secondary 6.000"
Maximum NEMA Motor Frame Size: 215C - 184TC Flange.
T Center Distance: Primary 2.000" Secondary 3.000" Third 6.000"
Maximum NEMA Motor Frame Size: 184C - 145TC Flange.

REDUCER NO.
10

OVERHUNG LOAD RATINGS

**OVERHUNG AND THRUST LOAD-SHAFTS (INCLUDES MOTORIZED WHERE APPLICABLE)

CVX — CVD CVT		LD - LX		LD - LX		CVX-CVD-CVT		SFD-SFT-STD			OVERALL RATIO
OUTPUT O.H.L.		OUTPUT O.H.L.									
UP	DOWN	UP	DOWN	OUTPUT THRUST DOWN	OUTPUT THRUST UP	OUTPUT THRUST DOWN	OUTPUT THRUST UP	OUTPUT THRUST TOWARDS BASE	OUTPUT THRUST AWAY FROM BASE	OUTPUT O.H.L. ‡ †	
5607 5607	5438 5438					6250 6250	3920 3920	6100 6100	6100 6100	5436 5436	1725 rpm INPUT 5000 (T) OUTPUT 0.345 rpm
5607 5607	5438 5438					6250 6250	3920 3920	6100 6100	6100 6100	5436 5436	1725 rpm INPUT 7500 (T) OUTPUT .230 rpm
5607 5607	5438 5438					6250 6250	3920 3920	6100 6100	6100 6100	5436 5436	1725 rpm INPUT 10000 (T) OUTPUT .173 rpm
5607 5607	5438 5438					6250 6250	3920 3920	6100 6100	6100 6100	5436 5436	1725 rpm INPUT 20000 (T) OUTPUT 0.086 rpm
5607 5607	5438 5438					6250 6250	3920 3920	6100 6100	6100 6100	5436 5436	1725 rpm INPUT 30000 (T) OUTPUT .058 rpm
5607 5607	5438 5438					6250 6250	3920 3920	6100 6100	6100 6100	5436 5436	1725 rpm INPUT 40000 (T) OUTPUT .043 rpm
5607 5607	5438 5438					6250 6250	3920 3920	6100 6100	6100 6100	5436 5436	1725 rpm INPUT 50000 (T) OUTPUT .035 rpm
5607 5607	5438 5438					6250 6250	3920 3920	6100 6100	6100 6100	5436 5436	1725 rpm INPUT 60000 (T) OUTPUT .029 rpm
5607 5607	5438 5438					6250 6250	3920 3920	6100 6100	6100 6100	5436 5436	1725 rpm INPUT 75000 (T) OUTPUT .023 rpm
5607 5607	5438 5438					6250 6250	3920 3920	6100 6100	6100 6100	5436 5436	1725 rpm INPUT 80000 (T) OUTPUT .022 rpm
5607 5607	5438 5438					6250 6250	3920 3920	6100 6100	6100 6100	5436 5436	1725 rpm INPUT 90000 (T) OUTPUT 0.019 rpm
5607 5607	5438 5438					6250 6250	3920 3920	6100 6100	6100 6100	5436 5436	1725 rpm INPUT 100000 (T) OUTPUT 0.017 rpm
5607 5607	5438 5438					6250 6250	3920 3920	6100 6100	6100 6100	5436 5436	1725 rpm INPUT 150000 (T) OUTPUT 0.012 rpm
5607 5607	5438 5438					6250 6250	3920 3920	6100 6100	6100 6100	5436 5436	1725 rpm INPUT 180000 (T) OUTPUT 0.010 rpm

***Overhung Load given at one shaft diameter from housing or mounting flange.*

‡ O.H.L. based on maximum bore. Use of smaller diameter shaft may limit O.H.L.

† 11.4375" from centerline.

5

DOUBLE AND TRIPLE REDUCTION REDUCER NO. 11

H Double Reduction Series Helical and Worm Gear
D Double Reduction Series Worm Gear
T Triple Reduction Series Worm Gear

All ratings stated are for A.G.M.A. Class 1 service.

HORSEPOWER TORQUE AND

OVERALL RATIO	INPUT SPEED R.P.M.	OUTPUT R.P.M.	RATIOS ★ DOUBLE 1ST	RATIOS ★ DOUBLE 2ND	RATIOS ★ TRIPLE 3RD	INPUT H.P.	OUTPUT TORQUE INCH LBS.	GEARMOTOR H.P. @ 1800 / OUTPUT TORQUE INCH LBS.	CBX-CTX CVX-LX INPUT O.H.L.	CBD-CVD SFD-CTD LD INPUT O.H.L.	CTT-CVT SFT INPUT O.H.L.	CBD-CTD CBX-CTX CTT OUTPUT O.H.L.
1725 rpm INPUT 50 (H) OUTPUT 34.5 rpm	1800	36.00	2	25		9.27	12959		414			7232
	1200	24.00				7.84	16128		414			7232
	600	12.00				4.50	17464		414			7232
	100	2.00		(25-1/2)		0.93	17464		414			7232
1725 rpm INPUT 50 (D) OUTPUT 34.5 rpm	1800	36.00	5	10		5.90	8269	5 / 6889		412		7232
	1200	24.00				4.93	10118			412		7232
	600	12.00				3.52	13648			412		7232
	100	2.00	(5-1/5)			0.85	14958			412		7232
1725 rpm INPUT 60 (H) OUTPUT 28.75 rpm	1800	30.00	3	20		9.77	16134		414			7232
	1200	20.00				7.86	19000		414			7232
	600	10.00				4.19	19000		414			7232
	100	1.67				0.86	19000		414			7232
1725 rpm INPUT 75 (H) OUTPUT 23.00 rpm	1800	24.00	3	25		7.84	16128		414			7232
	1200	16.00				5.83	17464		414			7232
	600	8.00				3.14	17464		414			7232
	100	1.33		(25-1/2)		0.66	17464		414			7232
1725 rpm INPUT 75 (D) OUTPUT 23.00 rpm	1800	24.00	5	15		5.90	11279	5 / 9397		412		7232
	1200	16.00				4.93	13687			412		7232
	600	8.00				3.52	18167			412		7232
	100	1.33	(5-1/5)	(14-1/2)		0.85	18856			412		7232
1725 rpm INPUT 80 (H) OUTPUT 21.56 rpm	1800	22.50	2	40		6.74	12905		414			7232
	1200	15.00				5.79	16121		414			7232
	600	7.50				3.91	20200		414			7232
	100	1.25				0.88	20200		414			7232
1725 rpm INPUT 90 (H) OUTPUT 19.17 rpm	1800	20.00	3	30		6.97	16296		414			7232
	1200	13.33				5.89	19391		414			7232
	600	6.67				3.77	23073		414			7232
	100	1.11				0.82	23073		414			7232
1725 rpm INPUT 100 (H) OUTPUT 17.25 rpm	1800	18.00	2	50		5.28	12360		414			7232
	1200	12.00				4.51	15350		414			7232
	600	6.00				2.81	17464		414			7232
	100	1.00		(51)		0.65	17464		414			7232
1725 rpm INPUT 100 (D) OUTPUT 17.25 rpm	1800	18.00	5	20		5.90	15123	5 / 12599		412		7232
	1200	12.00				4.93	18286			412		7232
	600	6.00				3.00	20200			412		7232
	100	1.00	(5-1/5)			0.73	20200			412		7232
1725 rpm INPUT 120 (H) OUTPUT 14.38 rpm	1800	15.00	3	40		5.79	16121		414			7232
	1200	10.00				4.77	19173		414			7232
	600	5.00				2.77	20200		414			7232
	100	0.83				0.63	20200		414			7232
1725 rpm INPUT 150 (H) OUTPUT 11.50 rpm	1800	12.00	3	50		4.51	15350		414			7232
	1200	8.00				3.58	17464		414			7232
	600	4.00				2.00	17464		414			7232
	100	0.67		(51)		0.46	17464		414			7232
1725 rpm INPUT 150 (D) OUTPUT 11.50 rpm	1800	12.00	5	30		5.77	20320	5 / 17366		412		7232
	1200	8.00				4.66	23464			412		7232
	600	4.00				2.77	24834			412		7232
	100	0.67	(5-1/5)			0.72	25384			412		7232
1725 rpm INPUT 180 (H) OUTPUT 9.58 rpm	1800	10.00	3	60		3.74	14350		414			7232
	1200	6.67				2.98	16348		414			7232
	600	3.39				1.69	16388		414			7232
	100	0.56				0.40	16388		414			7232

★*Numbers shown in ( ) are exact ratios.*

**Motor H.P. exceeds reducer capacity. Output must be limited to torque shown.*

H Center Distance: Primary (Helical) 3.000" Secondary (Worm) 6.500"
D Center Distance: Primary 3.000" Secondary 6.500"
Maximum NEMA Motor Frame Size: 215C - 184TC Flange.
T Center Distance: Primary 2.000" Secondary 3.000" Third 6.500"
Maximum NEMA Motor Frame Size: 184C - 145TC Flange.

REDUCER NO.
11

OVERHUNG LOAD RATINGS

**OVERHUNG AND THRUST LOAD-SHAFTS (INCLUDES MOTORIZED WHERE APPLICABLE)

CVX — CVD CVT		LD - LX		LD - LX		CVX-CVD-CVT		SFD-SFT-STD			OVERALL RATIO
OUTPUT O.H.L.		OUTPUT O.H.L.									
UP	DOWN	UP	DOWN	OUTPUT THRUST DOWN	OUTPUT THRUST UP	OUTPUT THRUST DOWN	OUTPUT THRUST UP	OUTPUT THRUST TOWARDS BASE	OUTPUT THRUST AWAY FROM BASE	OUTPUT O.H.L. ‡ †	
7232	7124					6036	3960				1725 rpm INPUT 50 (H) OUTPUT 34.5 rpm
7232	7124					6580	3960				
7232	7124					6580	3960				
7232	7124					6580	3960				
7232	7124					4682	3960				1725 rpm INPUT 50 (D) OUTPUT 34.5 rpm
7232	7124					5655	3960				
7232	7124					6580	3960				
7232	7124					6580	3960				
7232	7124					5933	3960				1725 rpm INPUT 60 (H) OUTPUT 28.75 rpm
7232	7124					6580	3960				
7232	7124					6580	3960				
7232	7124					6580	3960				
7232	7124					6580	3960				1725 rpm INPUT 75 (H) OUTPUT 23.00 rpm
7232	7124					6580	3960				
7232	7124					6580	3960				
7232	7124					6580	3960				
7232	7124					5713	3960				1725 rpm INPUT 75 (D) OUTPUT 23.00 rpm
7232	7124					6433	3960				
7232	7124					6580	3960				
7232	7124					6580	3960				
7232	7124					6580	3960				1725 rpm INPUT 80 (H) OUTPUT 21.56 rpm
7232	7124					6580	3960				
7232	7124					6580	3960				
7232	7124					6580	3960				
7232	7124					6580	3960				1725 rpm INPUT 90 (H) OUTPUT 19.17 rpm
7232	7124					6580	3960				
7232	7124					6580	3960				
7232	7124					6580	3960				
7232	7124					6580	3960				1725 rpm INPUT 100 (H) OUTPUT 17.25 rpm
7232	7124					6580	3960				
7232	7124					6580	3960				
7232	7124					6580	3960				
7232	7124					6580	3960				1725 rpm INPUT 100 (D) OUTPUT 17.25 rpm
7232	7124					6580	3960				
7232	7124					6580	3960				
7232	7124					6580	3960				
7232	7124					6580	3960				1725 rpm INPUT 120 (H) OUTPUT 14.38 rpm
7232	7124					6580	3960				
7232	7124					6580	3960				
7232	7124					6580	3960				
7232	7124					6580	3960				1725 rpm INPUT 150 (H) OUTPUT 11.50 rpm
7232	7124					6580	3960				
7232	7124					6580	3960				
7232	7124					6580	3960				
7232	7124					6580	3960				1725 rpm INPUT 150 (D) OUTPUT 11.50 rpm
7232	7124					6580	3960				
7232	7124					6580	3960				
7232	7124					6580	3960				
7232	7124					6580	3960				1725 rpm INPUT 180 (H) OUTPUT 9.58 rpm
7232	7124					6580	3960				
7232	7124					6580	3960				
7232	7124					6580	3960				

***Overhung Load given at one shaft diameter from housing or mounting flange.*

‡ O.H.L. based on maximum bore. Use of smaller diameter shaft may limit O.H.L.

5

DOUBLE AND TRIPLE REDUCTION REDUCER NO. 11

H Double Reduction Series Helical and Worm Gear
D Double Reduction Series Worm Gear
T Triple Reduction Series Worm Gear

All ratings stated are for A.G.M.A. Class 1 service.

HORSEPOWER TORQUE AND

OVERALL RATIO	INPUT SPEED R.P.M.	OUTPUT R.P.M.	RATIOS★ DOUBLE 1ST	RATIOS★ DOUBLE 2ND	RATIOS★ TRIPLE 3RD	INPUT H.P.	OUTPUT TORQUE INCH LBS.	GEARMOTOR H.P. @ 1800 / OUTPUT TORQUE INCH LBS.	CBX-CTX CVX-LX INPUT O.H.L.	CBD-CVD SFD-CTD LD INPUT O.H.L.	CTT-CVT SFT INPUT O.H.L.	CBD-CTD CBX-CTX CTT OUTPUT O.H.L.
1725 rpm INPUT 200 (D) OUTPUT 8.63 rpm	1800	9.00	5 (5-1/5)	40		4.74	20200	5 / 20200 *		412		7232
	1200	6.00				3.40	20200			412		7232
	600	3.00				1.97	20200			412		7232
	100	0.50				0.54	20200			412		7232
1725 rpm INPUT 300 (D) OUTPUT 5.75 rpm	1800	6.00	10 (10-1/3)	30		3.77	23598	3 / 18207		412		7232
	1200	4.00				2.83	24818			412		7232
	600	2.00				1.66	25384			412		7232
	100	0.33				0.43	25384			412		7232
1725 rpm INPUT 500 (D) OUTPUT 3.45 rpm	1800	3.60	25	20		1.95	16867	2 / 16867 *		412		7232
	1200	2.40				1.65	20200			412		7232
	600	1.20				0.97	20200			412		7232
	100	0.20				0.27	20200			412		7232
1725 rpm INPUT 750 (D) OUTPUT 2.30 rpm	1800	2.40	25	30		1.95	22257	2 / 22257 *		412		7232
	1200	1.60				1.60	25384			412		7232
	600	0.80				0.96	25384			412		7232
	100	0.13				0.28	25384			412		7232
1725 rpm INPUT 1000 (D) OUTPUT 1.73 rpm	1800	1.80	25	40		1.57	20200	1-1/2 / 19131		412		7232
	1200	1.20				1.16	20200			412		7232
	600	0.60				0.71	20200			412		7232
	100	0.10				0.21	20200			412		7232
1725 rpm INPUT 1000 (T) OUTPUT 1.73 rpm	1800	1.80	10	5 (5-1/5)	20	1.24	20200	1-1/2 / 20200 *			171	7232
	1200	1.20				0.90	20200				171	7232
	600											
	100											
1725 rpm INPUT 1500 (D) OUTPUT 1.15 rpm	1800	1.20	50	30		1.09	18253	1 / 16308		412		7232
	1200	0.80				0.91	21020			412		7232
	600	0.40				0.60	22548			412		7232
	100	0.07				0.17	18964			412		7232
1725 rpm INPUT 1500 (T) OUTPUT 1.15 rpm	1800	1.20	10	5 (5-1/5)	30	1.19	25384	1-1/2 / 25384 *			171	7232
	1200	0.80				0.88	25384				171	7232
	600											
	100											
1725 rpm INPUT 2000 (D) OUTPUT 0.863 rpm	1800	0.900	50	40		1.043	20200	1 / 19057		412		7232
	1200	0.600				0.789	20200			412		7232
	600	0.300				0.507	20200			412		7232
	100	0.050				0.164	20200			412		7232
1725 rpm INPUT 2000 (T) OUTPUT 0.863 rpm	1800	0.900	20	5 (5-1/5)	20	0.817	20200	1 / 20200 *			171	7232
	1200	0.600				0.611	20200				171	7232
	600											
	100											
1725 rpm INPUT 3000 (D) OUTPUT 0.575 rpm	1800	0.600	60	50 (51)		0.749	17464	3/4 / 17464 *		412		7232
	1200	0.400				0.573	17464			412		7232
	600	0.200				0.375	17464			412		7232
	100	0.033				0.125	17464			412		7232
1725 rpm INPUT 3000 (T) OUTPUT 0.575 rpm	1800	0.600	10	10 (10-1/3)	30	0.758	25384	3/4 / 25077			171	7232
	1200	0.400				0.568	25384				171	7232
	600											
	100											
1725 rpm INPUT 3600 (D) OUTPUT .479 rpm	1800	0.500	60	60		0.668	16388	3/4 / 16388 *		412		7232
	1200	0.333				0.511	16388			412		7232
	600	0.167				0.337	16388			412		7232
	100	0.028				0.112	16388			412		7232

★*Numbers shown in ( ) are exact ratios.*

**Motor H.P. exceeds reducer capacity. Output must be limited to torque shown.*

H Center Distance: Primary (Helical) 3.000" Secondary (Worm) 6.500"
D Center Distance: Primary 3.000" Secondary 6.500"
Maximum NEMA Motor Frame Size: 215C - 184TC Flange.
T Center Distance: Primary 2.000" Secondary 3.000" Third 6.500"
Maximum NEMA Motor Frame Size: 184C - 145TC Flange.

REDUCER NO
11

OVERHUNG LOAD RATINGS

**OVERHUNG AND THRUST LOAD-SHAFTS (INCLUDES MOTORIZED WHERE APPLICABLE)

CVX — CVD CVT		LD - LX		LD - LX		CVX-CVD-CVT		SFD-SFT-STD			OVERALL RATIO
OUTPUT O.H.L.		OUTPUT O.H.L.									
UP	DOWN	UP	DOWN	OUTPUT THRUST DOWN	OUTPUT THRUST UP	OUTPUT THRUST DOWN	OUTPUT THRUST UP	OUTPUT THRUST TOWARDS BASE	OUTPUT THRUST AWAY FROM BASE	OUTPUT O.H.L. ‡ †	
7232	7124					6580	3960				1725 rpm INPUT 200 (D) OUTPUT **8.63** rpm
7232	7124					6580	3960				
7232	7124					6580	3960				
7232	7124					6580	3960				
7232	7124					6580	3960				1725 rpm INPUT 300 (D) OUTPUT **5.75** rpm
7232	7124					6580	3960				
7232	7124					6580	3960				
7232	7124					6580	3960				
7232	7124					6580	3960				1725 rpm INPUT 500 (D) OUTPUT 3.45 rpm
7232	7124					6580	3960				
7232	7124					6580	3960				
7232	7124					6580	3960				
7232	7124					6580	3960				1725 rpm INPUT 750 (D) OUTPUT 2.30 rpm
7232	7124					6580	3960				
7232	7124					6580	3960				
7232	7124					6580	3960				
7232	7124					6580	3960				1725 rpm INPUT 1000 (D) OUTPUT 1.73 rpm
7232	7124					6580	3960				
7232	7124					6580	3960				
7232	7124					6580	3960				
7232	7124					6580	3960				1725 rpm INPUT 1000 (T) OUTPUT **1.73** rpm
7232	7124					6580	3960				
7232	7124					6580	3960				1725 rpm INPUT 1500 (D) OUTPUT 1.15 rpm
7232	7124					6580	3960				
7232	7124					6580	3960				
7232	7124					6580	3960				
7232	7124					6580	3960				1725 rpm INPUT 1500 (T) OUTPUT **1.15** rpm
7232	7124					6580	3960				
7232	7124					6580	3960				1725 rpm INPUT 2000 (D) OUTPUT 0.863 rpm
7232	7124					6580	3960				
7232	7124					6580	3960				
7232	7124					6580	3960				
7232	7124					6580	3960				1725 rpm INPUT 2000 (T) OUTPUT **0.863** rpm
7232	7124					6580	3960				
7232	7124					6580	3960				1725 rpm INPUT 3000 (D) OUTPUT **0.575** rpm
7232	7124					6580	3960				
7232	7124					6580	3960				
7232	7124					6580	3960				
7232	7124					6580	3960				1725 rpm INPUT 3000 (T) OUTPUT **0.575** rpm
7232	7124					6580	3960				
7232	7124					6580	3960				1725 rpm INPUT 3600 (D) OUTPUT .479 rpm
7232	7124					6580	3960				
7232	7124					6580	3960				
7232	7124					6580	3960				

***Overhung Load given at one shaft diameter from housing or mounting flange.*

‡ O.H.L. based on maximum bore. Use of smaller diameter shaft may limit O.H.L.

5

DOUBLE AND TRIPLE REDUCTION REDUCER NO. 11

H Double Reduction Series Helical and Worm Gear
D Double Reduction Series Worm Gear
T Triple Reduction Series Worm Gear

All ratings stated are for A.G.M.A. Class 1 service.

OVERALL RATIO	INPUT SPEED R.P.M.	OUTPUT R.P.M.	RATIOS★ DOUBLE 1ST	RATIOS★ DOUBLE 2ND	RATIOS★ TRIPLE 3RD	INPUT H.P.	OUTPUT TORQUE INCH LBS.	GEARMOTOR H.P. @ 1800 / OUTPUT TORQUE INCH LBS.	HORSEPOWER TORQUE AND CBX-CTX CVX-LX INPUT O.H.L.	CBD-CVD SFD-CTD LD INPUT O.H.L.	CTT-CVT SFT INPUT O.H.L.	CBD-CTD CBX-CTX CTT OUTPUT O.H.L.
1725 rpm INPUT 5000 (T) OUTPUT .345 rpm	1800 1200 600 100	0.360 0.240	10	25	20	0.519 0.398	20200 20200	1/2 18942			171 171	7232 7232
1725 rpm INPUT 7500 (T) OUTPUT .230 rpm	1800 1200 600 100	0.240 0.160	10	25	30	0.518 0.400	25384 25384	1/2 23912			171 171	7232 7232
1725 rpm INPUT 10000 (T) OUTPUT .173 rpm	1800 1200 600 100	0.180 0.120	20	25	20	0.391 0.306	20200 20200	1/3 14603			171 171	7232 7232
1725 rpm INPUT 20000 (T) OUTPUT .086 rpm	1800 1200 600 100	0.090 0.060	40	25	20	0.320 0.253	20200 20200	1/3 20200 *			171 171	7232 7232
1725 rpm INPUT 30000 (T) OUTPUT .058 rpm	1800 1200 600 100	0.060 0.040	40	25	30	0.327 0.261	25384 25384	1/3 25384 *			171 171	7232 7232
1725 rpm INPUT 40000 (T) OUTPUT .043 rpm	1800 1200 600 100	0.045 0.030	40	25	40	0.282 0.224	20200 20200	1/3 20200 *			171 171	7232 7232
1725 rpm INPUT 50000 (T) OUTPUT .035 rpm	1800 1200 600 100	0.036 0.024	50	25	40	0.259 0.206	20200 20200	1/4 20200			171 171	7232 7232
1725 rpm INPUT 60000 (T) OUTPUT .029 rpm	1800 1200 600 100	0.030 0.020	60	25	40	0.254 0.203	20200 20200	1/4 20200			171 171	7232 7232
1725 rpm INPUT 75000 (T) OUTPUT .023 rpm	1800 1200 600 100	0.024 0.016	50	30	50 (51)	0.224 0.178	17464 17464	1/4 17464 *			171 171	7232 7232
1725 rpm INPUT 80000 (T) OUTPUT .022 rpm	1800 1200 600 100	0.023 0.015	50	40	40	0.240 0.192	20200 20200	1/4 20200 *			171 171	7232 7232
1725 rpm INPUT 90000 (T) OUTPUT .019 rpm	1800 1200 600 100	0.020 0.013	60	30	50 (51)	0.220 0.175	17464 17464	1/4 17464 *			171 171	7232 7232
1725 rpm INPUT 100000 (T) OUTPUT .017 rpm	1800 1200 600 100	0.018 0.012	50	50	40	0.233 0.187	20200 20200	1/4 20200			171 171	7232 7232
1725 rpm INPUT 150000 (T) OUTPUT .012 rpm	1800 1200 600 100	0.012 0.008	60	50	50 (51)	0.208 0.166	17464 17464	1/4 17464 *			171 171	7232 7232
1725 rpm INPUT 180000 (T) OUTPUT .010 rpm	1800 1200 600 100	0.010 0.007	60	60	50 (51)	0.205 0.164	17464 17464	1/4 17464 *			171 171	7232 7232

★*Numbers shown in ( ) are exact ratios.*

**Motor H.P. exceeds reducer capacity. Output must be limited to torque shown.*

H Center Distance: Primary (Helical) 3.000" Secondary (Worm) 6.500"
D Center Distance: Primary 3.000" Secondary 6.500"
Maximum NEMA Motor Frame Size: 215C - 184TC Flange.
T Center Distance: Primary 2.000" Secondary 3.000" Third 6.500"
Maximum NEMA Motor Frame Size: 184C - 145TC Flange.

REDUCER NO.
11

OVERHUNG LOAD RATINGS

**OVERHUNG AND THRUST LOAD-SHAFTS (INCLUDES MOTORIZED WHERE APPLICABLE)

CVX — CVD CVT		LD - LX		LD - LX		CVX-CVD-CVT		SFD-SFT-STD			OVERALL RATIO
OUTPUT O.H.L.		OUTPUT O.H.L.									
UP	DOWN	UP	DOWN	OUTPUT THRUST DOWN	OUTPUT THRUST UP	OUTPUT THRUST DOWN	OUTPUT THRUST UP	OUTPUT THRUST TOWARDS BASE	OUTPUT THRUST AWAY FROM BASE	OUTPUT O.H.L. ‡ ‡	
7232 7232	7124 7124					6580 6580	3960 3960				1725 rpm INPUT 5000 (T) OUTPUT .345 rpm
7232 7232	7124 7124					6580 6580	3960 3960				1725 rpm INPUT 7500 (T) OUTPUT .230 rpm
7232 7232	7124 7124					6580 6580	3960 3960				1725 rpm INPUT 10000 (T) OUTPUT .173 rpm
7232 7232	7124 7124					6580 6580	3960 3960				1725 rpm INPUT 20000 (T) OUTPUT .086 rpm
7232 7232	7124 7124					6580 6580	3960 3960				1725 rpm INPUT 30000 (T) OUTPUT .058 rpm
7232 7232	7124 7124					6580 6580	3960 3960				1725 rpm INPUT 40000 (T) OUTPUT .043 rpm
7232 7232	7124 7124					6580 6580	3960 3960				1725 rpm INPUT 50000 (T) OUTPUT .035 rpm
7232 7232	7124 7124					6580 6580	3960 3960				1725 rpm INPUT 60000 (T) OUTPUT .029 rpm
7232 7232	7124 7124					6580 6580	3960 3960				1725 rpm INPUT 75000 (T) OUTPUT .023 rpm
7232 7232	7124 7124					6580 6580	3960 3960				1725 rpm INPUT 80000 (T) OUTPUT .022 rpm
7232 7232	7124 7124					6580 6580	3960 3960				1725 rpm INPUT 90000 (T) OUTPUT .019 rpm
7232 7232	7124 7124					6580 6580	3960 3960				1725 rpm INPUT 100000 (T) OUTPUT .017 rpm
7232 7232	7124 7124					6580 6580	3960 3960				1725 rpm INPUT 150000 (T) OUTPUT .012 rpm
7232 7232	7124 7124					6580 6580	3960 3960				1725 rpm INPUT 180000 (T) OUTPUT .010 rpm

***Overhung Load given at one shaft diameter from housing or mounting flange.*

‡ O.H.L. based on maximum bore. Use of smaller diameter shaft may limit O.H.L.

5

DOUBLE AND TRIPLE REDUCTION REDUCER NO. 12

H Double Reduction Series Helical and Worm Gear
D Double Reduction Series Worm Gear
T Triple Reduction Series Worm Gear

All ratings stated are for A.G.M.A. Class 1 service.

HORSEPOWER TORQUE AND

OVERALL RATIO	INPUT SPEED R.P.M.	OUTPUT R.P.M.	RATIOS★ DOUBLE 1ST	RATIOS★ DOUBLE 2ND	RATIOS★ TRIPLE 3RD	INPUT H.P.	OUTPUT TORQUE INCH LBS.	GEARMOTOR H.P. @ 1800 / OUTPUT TORQUE INCH LBS.	CBX-CTX CVX-LX INPUT O.H.L.	CBD-CVD SFD-CTD LD INPUT O.H.L.	CTT-CVT SFT INPUT O.H.L.	CBD-CTD CBX-CTX CTT OUTPUT O.H.L.
1725 rpm INPUT 50 (H) OUTPUT 34.5 rpm	1800	36.00	2	25		10.69	14998		414			5600
	1200	24.00				8.70	18009		414			5600
	600	12.00				5.47	21624		414			5600
	100	2.00				1.19	23350		414			5600
1725 rpm INPUT 50 (D) OUTPUT 34.50 rpm	1800	36.00	5 (5-1/6)	10 (10-1/3)		8.23	12403	7-1/2 / 11260		654		5600
	1200	24.00				6.74	14860			654		5600
	600	12.00				5.03	21102			654		5600
	100	2.00				1.25	25199			654		5600
1725 rpm INPUT 60 (H) OUTPUT 28.75 rpm	1800	30.00	2	30		9.95	15229		414			5600
	1200	20.00				8.51	19048		414			5600
	600	10.00				6.13	25809		414			5600
	100	1.67				1.32	25809		414			5600
1725 rpm INPUT 75 (H) OUTPUT 23.00 rpm	1800	24.00	3	25		8.70	18009		414			5600
	1200	16.00				6.72	20345		414			5600
	600	8.00				4.01	22984		414			5600
	100	1.33				0.83	23350		414			5600
1725 rpm INPUT 75 (D) OUTPUT 23.00 rpm	1800	24.00	7-1/2	10 (10-1/3)		6.58	13306	7-1/2 / 13306 *		654		5600
	1200	16.00				5.95	16060			654		5600
	600	8.00				4.01	22309			654		5600
	100	1.33				1.02	25926			654		5600
1725 rpm INPUT 80 (H) OUTPUT 21.56 rpm	1800	22.50	2	40		7.67	14911		414			5600
	1200	15.00				6.72	19109		414			5600
	600	7.50				4.61	24489		414			5600
	100	1.25				1.17	28584		414			5600
1725 rpm INPUT 90 (H) OUTPUT 19.17 rpm	1800	20.00	3	30		8.51	19048		414			5600
	1200	13.33				7.18	23324		414			5600
	600	6.67				4.17	25000		414			5600
	100	1.11				0.91	25000		414			5600
1725 rpm INPUT 100 (H) OUTPUT 17.25 rpm	1800	18.00	2	50 (51)		6.55	14459		414			5600
	1200	12.00				5.66	18087		414			5600
	600	6.00				3.59	20739		414			5600
	100	1.00				0.85	20739		414			5600
1725 rpm INPUT 100 (D) OUTPUT 17.25 rpm	1800	18.00	5 (5-1/6)	20 (20-1/2)		8.23	22364	7-1/2 / 20304		654		5600
	1200	12.00				6.74	26460			654		5600
	600	6.00				3.68	26521			654		5600
	100	1.00				0.84	26521			654		5600
1725 rpm INPUT 120 (H) OUTPUT 14.38 rpm	1800	15.00	3	40		6.67	19109		414			5600
	1200	10.00				5.44	22545		414			5600
	600	5.00				3.49	26600		414			5600
	100	0.83				0.83	28584		414			5600
1725 rpm INPUT 150 (H) OUTPUT 11.50 rpm	1800	12.00	3	50 (51)		5.66	18087		414			5600
	1200	8.00				4.56	20739		414			5600
	600	4.00				2.58	20739		414			5600
	100	0.67				0.62	20739		414			5600
1725 rpm INPUT 150 (D) OUTPUT 11.50 rpm	1800	12.00	5 (5-1/6)	30		6.77	24565	7-1/2 / 24565 *		654		5600
	1200	8.00				5.33	27631			654		5600
	600	4.00				3.06	28584			654		5600
	100	0.67				0.73	28584			654		5600
1725 rpm INPUT 180 (H) OUTPUT 9.58 rpm	1800	10.00	3	60		4.04	15754		414			5600
	1200	6.67				2.87	15754		414			5600
	600	3.33				1.62	15754		414			5600
	100	0.56				0.38	15754		414			5600

★*Numbers shown in ( ) are exact ratios.*

**Motor H.P. exceeds reducer capacity. Output must be limited to torque shown.*

H Center Distance: Primary (Helical) 3.000" Secondary (Worm) 7.000"
D Center Distance: Primary 3.500" Secondary 7.000"
Maximum NEMA Motor Frame Size: 215C - 184TC Flange.
T Center Distance: Primary 2.000" Secondary 3.500" Third 7.000"
Maximum NEMA Motor Frame Size: 184C - 145 TC Flange.

REDUCER NO.
12

OVERHUNG LOAD RATINGS

**OVERHUNG AND THRUST LOAD-SHAFTS (INCLUDES MOTORIZED WHERE APPLICABLE)

CVX — CVD CVT		LD - LX		LD - LX		CVX-CVD-CVT		SFD-SFT-STD			OVERALL RATIO
OUTPUT O.H.L.		OUTPUT O.H.L.									
UP	DOWN	UP	DOWN	OUTPUT THRUST DOWN	OUTPUT THRUST UP	OUTPUT THRUST DOWN	OUTPUT THRUST UP	OUTPUT THRUST TOWARDS BASE	OUTPUT THRUST AWAY FROM BASE	OUTPUT O.H.L. ‡ †	
5600	5490	5600	5600	6636	5452	5469	5447				1725 rpm INPUT
5600	5490	5600	5600	6636	5500	6031	5500				50 (H)
5600	5490	5600	5600	6636	5500	6636	5500				OUTPUT 34.5 rpm
5600	5490	5600	5600	6636	5500	6636	5500				
5600	5490	5600	5600	6125	4184	3896	3857	7000	7000	9900	1725 rpm INPUT
5600	5490	5600	5600	6636	4767	4753	4712	7000	7000	9900	50 (D)
5600	5490	5600	5600	6636	5500	6636	5500	7000	7000	9900	OUTPUT **34.50** rpm
5600	5490	5600	5600	6636	5500	6636	5500	7000	7000	9900	
5600	5490	5600	5600	6636	5500	6063	5500				1725 rpm INPUT
5600	5490	5600	5600	6636	5500	6628	5500				60 (H)
5600	5490	5600	5600	6636	5500	6636	5500				OUTPUT 28.75 rpm
5600	5490	5600	5600	6636	5500	6636	5500				
5600	5490	5600	5600	6636	5500	6031	5500				1725 rpm INPUT
5600	5490	5600	5600	6636	5500	6636	5500				75 (H)
5600	5490	5600	5600	6636	5500	6636	5500				OUTPUT 23.00 rpm
5600	5490	5600	5600	6636	5500	6636	5500				
5600	5490	5600	5600	6548	4502	4523	4482	7000	7000	9900	1725 rpm INPUT
5600	5490	5600	5600	6636	5500	5554	5500	7000	7000	9900	75 (D)
5600	5490	5600	5600	6636	5500	6636	5500	7000	7000	9900	OUTPUT **23.00** rpm
5600	5490	5600	5600	6636	5500	6636	5500	7000	7000	9900	
5600	5490	5600	5600	6636	5500	6636	5500				1725 rpm INPUT
5600	5490	5600	5600	6636	5500	6636	5500				80 (H)
5600	5490	5600	5600	6636	5500	6636	5500				OUTPUT 21.56 rpm
5600	5490	5600	5600	6636	5500	6636	5500				
5600	5490	5600	5600	6636	5500	6628	5500				1725 rpm INPUT
5600	5490	5600	5600	6636	5500	6636	5500				90 (H)
5600	5490	5600	5600	6636	5500	6636	5500				OUTPUT 19.17 rpm
5600	5490	5600	5600	6636	5500	6636	5500				
5600	5490	5600	5600	6636	5500	6636	5500				1725 rpm INPUT
5600	5490	5600	5600	6636	5500	6636	5500				100 (H)
5600	5490	5600	5600	6636	5500	6636	5500				OUTPUT **17.25** rpm
5600	5490	5600	5600	6636	5500	6636	5500				
5600	5490	5600	5600	6636	5500	6554	5500	7000	7000	9900	1725 rpm INPUT
5600	5490	5600	5600	6636	5500	6636	5500	7000	7000	9900	100 (D)
5600	5490	5600	5600	6636	5500	6636	5500	7000	7000	9900	OUTPUT **17.25** rpm
5600	5490	5600	5600	6636	5500	6636	5500	7000	7000	9900	
5600	5490	5600	5600	6636	5500	6636	5500				1725 rpm INPUT
5600	5490	5600	5600	6636	5500	6636	5500				120 (H)
5600	5490	5600	5600	6636	5500	6636	5500				OUTPUT 14.38 rpm
5600	5490	5600	5600	6636	5500	6636	5500				
5600	5490	5600	5600	6636	5500	6636	5500				1725 rpm INPUT
5600	5490	5600	5600	6636	5500	6636	5500				150 (H)
5600	5490	5600	5600	6636	5500	6636	5500				OUTPUT **11.50** rpm
5600	5490	5600	5600	6636	5500	6636	5500				
5600	5490	5600	5600	6636	5500	6636	5500	7000	7000	9900	1725 rpm INPUT
5600	5490	5600	5600	6636	5500	6636	5500	7000	7000	9900	150 (D)
5600	5490	5600	5600	6636	5500	6636	5500	7000	7000	9900	OUTPUT 11.50 rpm
5600	5490	5600	5600	6636	5500	6636	5500	7000	7000	9900	
5600	5490	5600	5600	6636	5500	6636	5500				1725 rpm INPUT
5600	5490	5600	5600	6636	5500	6636	5500				180 (H)
5600	5490	5600	5600	6636	5500	6636	5500				OUTPUT 9.58 rpm
5600	5490	5600	5600	6636	5500	6636	5500				

***Overhung Load given at one shaft diameter from housing or mounting flange.*

‡ O.H.L. based on maximum bore. Use of smaller diameter shaft may limit O.H.L.

† 12.4375" from centerline.

5

DOUBLE AND TRIPLE REDUCTION REDUCER NO. 12

H Double Reduction Series Helical and Worm Gear
D Double Reduction Series Worm Gear
T Triple Reduction Series Worm Gear

All ratings stated are for A.G.M.A. Class 1 service.

HORSEPOWER TORQUE AND

OVERALL RATIO	INPUT SPEED R.P.M.	OUTPUT R.P.M.	RATIOS★ DOUBLE 1ST	RATIOS★ DOUBLE 2ND	RATIOS★ TRIPLE 3RD	INPUT H.P.	OUTPUT TORQUE INCH LBS.	GEARMOTOR H.P. @ 1800 / OUTPUT TORQUE INCH LBS.	CBX-CTX CVX-LX INPUT O.H.L.	CBD-CVD SFD-CTD LD INPUT O.H.L.	CTT-CVT SFT INPUT O.H.L.	CBD-CTD CBX-CTX CTT OUTPUT O.H.L.
1725 rpm INPUT 200 (D) OUTPUT 8.63 rpm	1800	9.00	5 (5-1/6)	40		5.11	23519	5 / 22974		654		5600
	1200	6.00				3.96	25889			654		5600
	600	3.00				2.43	28499			654		5600
	100	.50				0.63	28584			654		5600
1725 rpm INPUT 300 (D) OUTPUT 5.75 rpm	1800	6.00	10 (10-1/3)	30		4.68	28584	5 / 28584 *		654		5600
	1200	4.00				3.37	28584			654		5600
	600	2.00				1.96	28584			654		5600
	100	0.33				0.52	28584			654		5600
1725 rpm INPUT 500 (D) OUTPUT 3.45 rpm	1800	3.60	25	20 (20-1/2)		2.69	23120	3 / 23120 *		654		5600
	1200	2.40				2.22	26521			654		5600
	600	1.20				1.32	26521			654		5600
	100	0.20				0.39	26521			654		5600
1725 rpm INPUT 750 (D) OUTPUT 2.30 rpm	1800	2.40	25	30		2.60	28584	3 / 28584 *		654		5600
	1200	1.60				1.92	28584			654		5600
	600	0.80				1.17	28584			654		5600
	100	0.13				0.37	28584			654		5600
1725 rpm INPUT 1000 (D) OUTPUT 1.73 rpm	1800	1.80	25	40		2.13	28584	2 / 26391		654		5600
	1200	1.20				1.59	28584			654		5600
	600	0.60				0.98	28584			654		5600
	100	0.10				0.31	28584			654		5600
1725 rpm INPUT 1000 (T) OUTPUT 1.73 rpm	1800	1.80	5	5 (5-1/6)	40	1.83	28584	2 / 28584			171	5600
	1200	1.20				1.36	28584				171	5600
	600											
	100											
1725 rpm INPUT 1500 (D) OUTPUT 1.15 rpm	1800	1.20	50	30		1.46	24733	1-1/2 / 24733 *		654		5600
	1200	0.80				1.23	28584			654		5600
	600	0.40				0.78	28584			654		5600
	100	0.07				0.26	28584			654		5600
1725 rpm INPUT 1500 (T) OUTPUT 1.15 rpm	1800	1.20	5	10 (10-1/3)	30	1.41	28584	1-1/2 / 28584 *			171	5600
	1200	0.80				1.04	28584				171	5600
	600											
	100											
1725 rpm INPUT 2000 (D) OUTPUT .863 rpm	1800	0.900	50	40		1.371	28584	1-1/2 / 28584 *		654		5600
	1200	0.600				1.035	28584			654		5600
	600	0.300				0.661	28584			654		5600
	100	0.050				0.232	28584			654		5600
1725 rpm INPUT 2000 (T) OUTPUT .863 rpm	1800	0.900	10	5 (5-1/6)	40	1.132	28584	1-1/2 / 28584 *			171	5600
	1200	0.600				0.838	28584				171	5600
	600											
	100											
1725 rpm INPUT 3000 (D) OUTPUT .575 rpm	1800	0.600	60	50 (51)		1.056	20739	1 / 19516		654		5600
	1200	0.400				0.825	20739			654		5600
	600	0.200				0.549	20739			654		5600
	100	0.033				0.217	20739			654		5600
1725 rpm INPUT 3000 (T) OUTPUT .575 rpm	1800	0.600	10	10 (10-1/3)	30	0.888	28584	1 / 28584 *			171	5600
	1200	0.400				0.669	28584				171	5600
	600											
	100											
1725 rpm INPUT 3600 (D) OUTPUT 0.479 rpm	1800	0.500	60	60		0.732	15754	3/4 / 15754 *		654		5600
	1200	0.333				0.573	15754			654		5600
	600	0.167				0.380	15754			654		5600
	100	0.028				0.150	15754			654		5600

★*Numbers shown in ( ) are exact ratios.*

**Motor H.P. exceeds reducer capacity. Output must be limited to torque shown.*

H Center Distance: Primary (Helical) 3.000" Secondary (Worm) 7.000"
D Center Distance: Primary 3.500" Secondary 7.000"
Maximum NEMA Motor Frame Size: 215C - 184TC Flange.
T Center Distance: Primary 2.000" Secondary 3.500" Third 7.000"
Maximum NEMA Motor Frame Size: 184C - 145 TC Flange.

REDUCER NO. 12

OVERHUNG LOAD RATINGS

**OVERHUNG AND THRUST LOAD-SHAFTS (INCLUDES MOTORIZED WHERE APPLICABLE)

CVX — CVD CVT		LD - LX		LD - LX		CVX-CVD-CVT		SFD-SFT-STD			OVERALL RATIO
OUTPUT O.H.L.		OUTPUT O.H.L.									
UP	DOWN	UP	DOWN	OUTPUT THRUST DOWN	OUTPUT THRUST UP	OUTPUT THRUST DOWN	OUTPUT THRUST UP	OUTPUT THRUST TOWARDS BASE	OUTPUT THRUST AWAY FROM BASE	OUTPUT O.H.L. ‡ †	
5600	5490	5600	5600	6636	5500	6636	5500	7000	7000	9900	1725 rpm INPUT
5600	5490	5600	5600	6636	5500	6636	5500	7000	7000	9900	200 (D)
5600	5490	5600	5600	6636	5500	6636	5500	7000	7000	9900	OUTPUT 8.63 rpm
5600	5490	5600	5600	6636	5500	6636	5500	7000	7000	9900	
5600	5490	5600	5600	6636	5500	6636	5500	7000	7000	9900	1725 rpm INPUT
5600	5490	5600	5600	6636	5500	6636	5500	7000	7000	9900	300 (D)
5600	5490	5600	5600	6636	5500	6636	5500	7000	7000	9900	OUTPUT 5.75 rpm
5600	5490	5600	5600	6636	5500	6636	5500	7000	7000	9900	
5600	5490	5600	5600	6636	5500	6636	5500	7000	7000	9900	1725 rpm INPUT
5600	5490	5600	5600	6636	5500	6636	5500	7000	7000	9900	500 (D)
5600	5490	5600	5600	6636	5500	6636	5500	7000	7000	9900	OUTPUT 3.45 rpm
5600	5490	5600	5600	6636	5500	6636	5500	7000	7000	9900	
5600	5490	5600	5600	6636	5500	6636	5500	7000	7000	9900	1725 rpm INPUT
5600	5490	5600	5600	6636	5500	6636	5500	7000	7000	9900	750 (D)
5600	5490	5600	5600	6636	5500	6636	5500	7000	7000	9900	OUTPUT 2.30 rpm
5600	5490	5600	5600	6636	5500	6636	5500	7000	7000	9900	
5600	5490	5600	5600	6636	5500	6636	5500	7000	7000	9900	1725 rpm INPUT
5600	5490	5600	5600	6636	5500	6636	5500	7000	7000	9900	1000 (D)
5600	5490	5600	5600	6636	5500	6636	5500	7000	7000	9900	OUTPUT 1.73 rpm
5600	5490	5600	5600	6636	5500	6636	5500	7000	7000	9900	
5600	5490					6636	5500	7000	7000	9900	1725 rpm INPUT
5600	5490					6636	5500	7000	7000	9900	1000 (T)
											OUTPUT 1.73 rpm
5600	5490	5600	5600	6636	5500	6636	5500	7000	7000	9900	1725 rpm INPUT
5600	5490	5600	5600	6636	5500	6636	5500	7000	7000	9900	1500 (D)
5600	5490	5600	5600	6636	5500	6636	5500	7000	7000	9900	OUTPUT 1.15 rpm
5600	5490	5600	5600	6636	5500	6636	5500	7000	7000	9900	
5600	5490					6636	5500	7000	7000	9900	1725 rpm INPUT
5600	5490					6636	5500	7000	7000	9900	1500 (T)
											OUTPUT 1.15 rpm
5600	5490	5600	5600	6636	5500	6636	5500	7000	7000	9900	1725 rpm INPUT
5600	5490	5600	5600	6636	5500	6636	5500	7000	7000	9900	2000 (D)
5600	5490	5600	5600	6636	5500	6636	5500	7000	7000	9900	OUTPUT .863 rpm
5600	5490	5600	5600	6636	5500	6636	5500	7000	7000	9900	
5600	5490					6636	5500	7000	7000	9900	1725 rpm INPUT
5600	5490					6636	5500	7000	7000	9900	2000 (T)
											OUTPUT .863 rpm
5600	5490	5600	5600	6636	5500	6636	5500	7000	7000	9900	1725 rpm INPUT
5600	5490	5600	5600	6636	5500	6636	5500	7000	7000	9900	3000 (D)
5600	5490	5600	5600	6636	5500	6636	5500	7000	7000	9900	OUTPUT .575 rpm
5600	5490	5600	5600	6636	5500	6636	5500	7000	7000	9900	
5600	5490					6636	5500	7000	7000	9900	1725 rpm INPUT
5600	5490					6636	5500	7000	7000	9900	3000 (T)
											OUTPUT .575 rpm
5600	5490	5600	5600	6636	5500	6636	5500	7000	7000	9900	1725 rpm INPUT
5600	5490	5600	5600	6636	5500	6636	5500	7000	7000	9900	3600 (D)
5600	5490	5600	5600	6636	5500	6636	5500	7000	7000	9900	OUTPUT 0.479 rpm
5600	5490	5600	5600	6636	5500	6636	5500	7000	7000	9900	

***Overhung Load given at one shaft diameter from housing or mounting flange.*

‡ O.H.L. based on maximum bore. Use of smaller diameter shaft may limit O.H.L.

† 12.4375" from centerline.

5

DOUBLE AND TRIPLE REDUCTION REDUCER NO. 12

H Double Reduction Series Helical and Worm Gear
D Double Reduction Series Worm Gear
T Triple Reduction Series Worm Gear

All ratings stated are for A.G.M.A. Class 1 service.

OVERALL RATIO	INPUT SPEED R.P.M.	OUTPUT R.P.M.	RATIOS★ DOUBLE 1ST	RATIOS★ DOUBLE 2ND	RATIOS★ TRIPLE 3RD	INPUT H.P.	OUTPUT TORQUE INCH LBS.	GEARMOTOR H.P. @ 1800 / OUTPUT TORQUE INCH LBS.	HORSEPOWER TORQUE AND CBX-CTX CVX-LX INPUT O.H.L.	CBD-CVD SFD-CTD LD INPUT O.H.L.	CTT-CVT SFT INPUT O.H.L.	CBD-CTD CBX-CTX CTT OUTPUT O.H.L.
1725 rpm INPUT 5000 (T) OUTPUT 0.345 rpm	1800 1200 600 100	0.360 0.240	5	25	40	0.780 0.604	28584 28584	3/4 26829			171 171	5600 5600
1725 rpm INPUT 7500 (T) OUTPUT 0.230 rpm	1800 1200 600 100	0.240 0.160	10	25	30	0.621 0.484	28584 28584	3/4 28584 *			171 171	5600 5600
1725 rpm INPUT 10000 (T) OUTPUT .173 rpm	1800 1200 600 100	0.180 0.120	10	25	40	0.545 0.427	28584 28584	1/2 24346			171 171	5600 5600
1725 rpm INPUT 20000 (T) OUTPUT 0.086 rpm	1800 1200 600 100	0.090 0.060	20	25	40	0.422 0.334	28584 28584	1/2 28584 *			171 171	5600 5600
1725 rpm INPUT 30000 (T) OUTPUT 0.058 rpm	1800 1200 600 100	0.060 0.040	30	25	40	0.367 0.293	28584 28584	1/3 23146			171 171	5600 5600
1725 rpm INPUT 40000 (T) OUTPUT 0.043 rpm	1800 1200 600 100	0.045 0.030	40	25	40	0.350 0.283	28584 28584	1/3 25608			171 171	5600 5600
1725 rpm INPUT 50000 (T) OUTPUT 0.035 rpm	1800 1200 600 100	0.036 0.024	50	25	40	0.319 0.258	28584 28584	1/3 28584 *			171 171	5600 5600
1725 rpm INPUT 60000 (T) OUTPUT 0.029 rpm	1800 1200 600 100	0.030 0.020	60	25	40	0.314 0.254	28584 28584	1/3 28584 *			171 171	5600 5600
1725 rpm INPUT 75000 (T) OUTPUT 0.023 rpm	1800 1200 600 100	0.024 0.016	50	50	30	0.281 0.219	25790 23228	1/4 22996			171 171	5600 5600
1725 rpm INPUT 80000 (T) OUTPUT 0.022 rpm	1800 1200 600 100	0.023 0.015	50	40	40	0.277 0.225	28584 28584	1/4 25912			171 171	5600 5600
1725 rpm INPUT 90000 (T) OUTPUT 0.019 rpm	1800 1200 600 100	0.020 0.013	60	50	30	0.273 0.212	24614 22129	1/4 23803			171 171	5600 5600
1725 rpm INPUT 100000 (T) OUTPUT 0.017 rpm	1800 1200 600 100	0.018 0.012	50	50	40	0.271 0.219	28584 28141	1/4 27986			171 171	5600 5600
1725 rpm INPUT 150000 (T) OUTPUT 0.012 rpm	1800 1200 600 100	0.012 0.008	50	60	50 (51)	0.264 0.216	20739 20739	1/4 17760			171 171	5600 5600
1725 rpm INPUT 180000 (T) OUTPUT 0.010 rpm	1800 1200 600 100	0.010 0.007	60	60	50 (51)	0.262 0.214	20739 20739	1/4 18035			171 171	5600 5600

★*Numbers shown in ( ) are exact ratios.*

**Motor H.P. exceeds reducer capacity. Output must be limited to torque shown.*

H Center Distance: Primary (Helical) 3.000" Secondary (Worm) 7.000"
D Center Distance: Primary 3.500" Secondary 7.000"
Maximum NEMA Motor Frame Size: 215C - 184TC Flange.
T Center Distance: Primary 2.000" Secondary 3.500" Third 7.000"
Maximum NEMA Motor Frame Size: 184C - 145 TC Flange.

REDUCER NO.
12

OVERHUNG LOAD RATINGS

**OVERHUNG AND THRUST LOAD-SHAFTS (INCLUDES MOTORIZED WHERE APPLICABLE)

CVX — CVD CVT		LD - LX		LD - LX		CVX-CVD-CVT		SFD-SFT-STD			OVERALL RATIO
OUTPUT O.H.L.		OUTPUT O.H.L.									
UP	DOWN	UP	DOWN	OUTPUT THRUST DOWN	OUTPUT THRUST UP	OUTPUT THRUST DOWN	OUTPUT THRUST UP	OUTPUT THRUST TOWARDS BASE	OUTPUT THRUST AWAY FROM BASE	OUTPUT O.H.L. ‡ †	
5600 5600	5490 5490					6636 6636	5500 5500	7000 7000	7000 7000	9900 9900	1725 rpm INPUT 5000 (T) OUTPUT 0.345 rpm
5600 5600	5490 5490					6636 6636	5500 5500	7000 7000	7000 7000	9900 9900	1725 rpm INPUT 7500 (T) OUTPUT 0.230 rpm
5600 5600	5490 5490					6636 6636	5500 5500	7000 7000	7000 7000	9900 9900	1725 rpm INPUT 10000 (T) OUTPUT .173 rpm
5600 5600	5490 5490					6636 6636	5500 5500	7000 7000	7000 7000	9900 9900	1725 rpm INPUT 20000 (T) OUTPUT 0.086 rpm
5600 5600	5490 5490					6636 6636	5500 5500	7000 7000	7000 7000	9900 9900	1725 rpm INPUT 30000 (T) OUTPUT 0.058 rpm
5600 5600	5490 5490					6636 6636	5500 5500	7000 7000	7000 7000	9900 9900	1725 rpm INPUT 40000 (T) OUTPUT 0.043 rpm
5600 5600	5490 5490					6636 6636	5500 5500	7000 7000	7000 7000	9900 9900	1725 rpm INPUT 50000 (T) OUTPUT 0.035 rpm
5600 5600	5490 5490					6636 6636	5500 5500	7000 7000	7000 7000	9900 9900	1725 rpm INPUT 60000 (T) OUTPUT 0.029 rpm
5600 5600	5490 5490					6636 6636	5500 5500	7000 7000	7000 7000	9900 9900	1725 rpm INPUT 75000 (T) OUTPUT 0.023 rpm
5600 5600	5490 5490					6636 6636	5500 5500	7000 7000	7000 7000	9900 9900	1725 rpm INPUT 80000 (T) OUTPUT 0.022 rpm
5600 5600	5490 5490					6636 6636	5500 5500	7000 7000	7000 7000	9900 9900	1725 rpm INPUT 90000 (T) OUTPUT 0.019 rpm
5600 5600	5490 5490					6636 6636	5500 5500	7000 7000	7000 7000	9900 9900	1725 rpm INPUT 100000 (T) OUTPUT 0.017 rpm
5600 5600	5490 5490					6636 6636	5500 5500	7000 7000	7000 7000	9900 9900	1725 rpm INPUT 150000 (T) OUTPUT 0.012 rpm
5600 5600	5490 5490					6636 6636	5500 5500	7000 7000	7000 7000	9900 9900	1725 rpm INPUT 180000 (T) OUTPUT 0.010 rpm

***Overhung Load given at one shaft diameter from housing or mounting flange.*

‡ O.H.L. based on maximum bore. Use of smaller diameter shaft may limit O.H.L.

† 12.4375" from centerline.

5

DOUBLE AND TRIPLE REDUCTION REDUCER NO. 13

H Double Reduction Series Helical and Worm Gear
D Double Reduction Series Worm Gear
T Triple Reduction Series Worm Gear

All ratings stated are for A.G.M.A. Class 1 service.

OVERALL RATIO	INPUT SPEED R.P.M.	OUTPUT R.P.M.	RATIOS★ DOUBLE 1ST	RATIOS★ DOUBLE 2ND	RATIOS★ TRIPLE 3RD	INPUT H.P.	OUTPUT TORQUE INCH LBS.	GEARMOTOR H.P. @ 1800 / OUTPUT TORQUE INCH LBS.	HORSEPOWER TORQUE AND CBX-CTX CVX-LX INPUT O.H.L.	CBD-CVD SFD-CTD LD INPUT O.H.L.	CTT-CVT SFT INPUT O.H.L.	CBD-CTD CBX-CTX CTT OUTPUT O.H.L.
1725 rpm INPUT 50 (H) OUTPUT 34.50 rpm	1800	36.00	2	25		13.59	18714		414			6924
	1200	24.00				11.52	23389		414			6924
	600	12.00				6.42	24602		414			6924
	100	2.00				1.34	24602		414			6924
1725 rpm INPUT 50 (D) OUTPUT 34.50 rpm	1800	36.00	5 (5-1/6)	10 (10-1/4)		8.23	12536	7-1/2 / 11376		654		6924
	1200	24.00				6.74	15071			654		6924
	600	12.00				5.03	21550			654		6924
	100	2.00				1.25	26287			654		6924
1725 rpm INPUT 60 (H) OUTPUT 28.75 rpm	1800	30.00	2	30		11.93	18728		414			6924
	1200	20.00				10.18	23451		414			6924
	600	10.00				6.42	27800		414			6924
	100	1.67				1.38	27800		414			6924
1725 rpm INPUT 75 (H) OUTPUT 23.00 rpm	1800	24.00	3	25		11.16	22600		414			6924
	1200	16.00				7.70	22600		414			6924
	600	8.00				4.13	22600		414			6924
	100	1.33				0.88	22600		414			6924
1725 rpm INPUT 75 (D) OUTPUT 23.00 rpm	1800	24.00	5 (5-1/6)	15 (15-1/3)		8.23	18123	7-1/2 / 16447		654		6924
	1200	16.00				6.74	21684			654		6924
	600	8.00				5.03	30716			654		6924
	100	1.33				1.16	33615			654		6924
1725 rpm INPUT 80 (H) OUTPUT 21.56 rpm	1800	22.50	2	40		8.79	18096		414			6924
	1200	15.00				7.28	22011		414			6924
	600	7.50				4.70	26755		414			6924
	100	1.25				1.18	31522		414			6924
1725 rpm INPUT 90 (H) OUTPUT 19.17 rpm	1800	20.00	3	30		10.18	23451		414			6924
	1200	13.33				7.82	26100		414			6924
	600	6.67				4.24	26100		414			6924
	100	1.11				0.93	26100		414			6924
1725 rpm INPUT 100 (H) OUTPUT 17.25 rpm	1800	18.00	2	50		7.74	17911		414			6924
	1200	12.00				6.63	22375		414			6924
	600	6.00				4.63	29021		414			6924
	100	1.00				1.16	31750		414			6924
1725 rpm INPUT 100 (D) OUTPUT 17.25 rpm	1800	18.00	5 (5-1/6)	20		8.23	23349	7-1/2 / 21189		654		6924
	1200	12.00				6.74	27890			654		6924
	600	6.00				3.91	30296			654		6924
	100	1.00				0.89	32332			654		6924
1725 rpm INPUT 120 (H) OUTPUT 14.38 rpm	1800	15.00	3	40		7.28	22011		414			6924
	1200	10.00				5.71	25082		414			6924
	600	5.00				3.50	28581		414			6924
	100	.83				0.85	31867		414			6924
1725 rpm INPUT 150 (H) OUTPUT 11.50 rpm	1800	12.00	3	50		6.63	22375		414			6924
	1200	8.00				5.47	26611		414			6924
	600	4.00				3.56	31649		414			6924
	100	0.67				0.84	31750		414			6924
1725 rpm INPUT 150 (D) OUTPUT 11.50 rpm	1800	12.00	5 (5-1/6)	30		7.89	29719	7-1/2 / 28196		654		6924
	1200	8.00				6.14	33159			654		6924
	600	4.00				3.76	36996			654		6924
	100	.67				0.88	37110			654		6924
1725 rpm INPUT 180 (H) OUTPUT 9.58 rpm	1800	10.00	3	60 (59)		5.91	21240		414			6924
	1200	6.67				4.87	24961		414			6924
	600	3.33				2.76	24961		414			6924
	100	0.56				0.68	24961		414			6924

★*Numbers shown in ( ) are exact ratios.*

**Motor H.P. exceeds reducer capacity. Output must be limited to torque shown.*

H Center Distance: Primary (Helical) 3.000" Secondary (Worm) 7.625"
D Center Distance: Primary 3.500" Secondary 7.625"
Maximum NEMA Motor Frame Size: 215C - 184TC Flange.
T Center Distance: Primary 2.000" Secondary 3.500" Third 7.625"
Maximum NEMA Motor Frame Size: 184C - 145TC Flange.

REDUCER NO. 13

OVERHUNG LOAD RATINGS

**OVERHUNG AND THRUST LOAD-SHAFTS (INCLUDES MOTORIZED WHERE APPLICABLE)

CVX — CVD CVT		LD - LX		LD - LX		CVX-CVD-CVT		SFD-SFT-STD			OVERALL RATIO
OUTPUT O.H.L.		OUTPUT O.H.L.									
UP	DOWN	UP	DOWN	OUTPUT THRUST DOWN	OUTPUT THRUST UP	OUTPUT THRUST DOWN	OUTPUT THRUST UP	OUTPUT THRUST TOWARDS BASE	OUTPUT THRUST AWAY FROM BASE	OUTPUT O.H.L. ‡ †	
6924	6653					6715	6072				1725 rpm INPUT 50 (H) OUTPUT 34.50 rpm
6924	6653					6715	6072				
6924	6653					6715	6072				
6924	6653					6715	6072				
6924	6653					5189	5154				1725 rpm INPUT 50 (D) OUTPUT 34.50rpm
6924	6653					5965	5926				
6924	6653					6715	6072				
6924	6653					6715	6072				
6924	6653					6715	6092				1725 rpm INPUT 60 (H) OUTPUT 28.75 rpm
6924	6653					6715	6092				
6924	6653					6715	6092				
6924	6653					6715	6092				
6924	6653					6715	6072				1725 rpm INPUT 75 (H) OUTPUT 23.00 rpm
6924	6653					6715	6072				
6924	6653					6715	6072				
6924	6653					6715	6072				
6924	6653					6715	6072				1725 rpm INPUT 75 (D) OUTPUT 23.00rpm
6924	6653					6715	6072				
6924	6653					6715	6072				
6924	6653					6715	6072				
6924	6653					6715	6092				1725 rpm INPUT 80 (H) OUTPUT 21.56 rpm
6924	6653					6715	6092				
6924	6653					6715	6092				
6924	6653					6715	6092				
6924	6653					6715	6092				1725 rpm INPUT 90 (H) OUTPUT 19.17 rpm
6924	6653					6715	6092				
6924	6653					6715	6092				
6924	6653					6715	6092				
6924	6653					6715	6072				1725 rpm INPUT 100 (H) OUTPUT 17.25 rpm
6924	6653					6715	6072				
6924	6653					6715	6072				
6924	6653					6715	6072				
6924	6653					6715	6072				1725 rpm INPUT 100 (D) OUTPUT 17.25 rpm
6924	6653					6715	6072				
6924	6653					6715	6072				
6924	6653					6715	6072				
6924	6653					6715	6092				1725 rpm INPUT 120 (H) OUTPUT 14.38 rpm
6924	6653					6715	6092				
6924	6653					6715	6092				
6924	6653					6715	6092				
6924	6653					6715	6092				1725 rpm INPUT 150 (H) OUTPUT 11.50 rpm
6924	6653					6715	6092				
6924	6653					6715	6092				
6924	6653					6715	6092				
6924	6653					6715	6072				1725 rpm INPUT 150 (D) OUTPUT 11.50rpm
6924	6653					6715	6072				
6924	6653					6715	6072				
6924	6653					6715	6072				
6924	6653					6715	6092				1725 rpm INPUT 180 (H) OUTPUT 9.58rpm
6924	6653					6715	6092				
6924	6653					6715	6092				
6924	6653					6715	6092				

***Overhung Load given at one shaft diameter from housing or mounting flange.*

‡ O.H.L. based on maximum bore. Use of smaller diameter shaft may limit O.H.L.

5

DOUBLE AND TRIPLE REDUCTION REDUCER NO. 13

H Double Reduction Series Helical and Worm Gear
D Double Reduction Series Worm Gear
T Triple Reduction Series Worm Gear

All ratings stated are for A.G.M.A. Class 1 service.

HORSEPOWER TORQUE AND

OVERALL RATIO	INPUT SPEED R.P.M.	OUTPUT R.P.M.	RATIOS ★ DOUBLE 1ST	RATIOS ★ DOUBLE 2ND	RATIOS ★ TRIPLE 3RD	INPUT H.P.	OUTPUT TORQUE INCH LBS.	GEARMOTOR H.P. @ 1800 / OUTPUT TORQUE INCH LBS.	CBX-CTX CVX-LX INPUT O.H.L.	CBD-CVD SFD-CTD LD INPUT O.H.L.	CTT-CVT SFT INPUT O.H.L.	CBD-CTD CBX-CTX CTT OUTPUT O.H.L.
1725 rpm INPUT 200 (D) OUTPUT 8.63 rpm	1800	9.00	10 (10-1/3)	20		5.23	27277	5 / 26008		654		6924
	1200	6.00				4.04	30296			654		6924
	600	3.00				2.29	31502			654		6924
	100	0.50				0.55	32543			654		6924
1725 rpm INPUT 300 (D) OUTPUT 5.75 rpm	1800	6.00	10 (10-1/3)	30		5.31	33881	5 / 31671		654		6924
	1200	4.00				4.13	37012			654		6924
	600	2.00				2.40	37110			654		6924
	100	0.33				0.62	37110			654		6924
1725 rpm INPUT 500 (D) OUTPUT 3.45 rpm	1800	3.60	20	25		3.26	31049	3 / 28158		654		6924
	1200	2.40				2.41	31750			654		6924
	600	1.20				1.41	31750			654		6924
	100	0.20				0.38	31750			654		6924
1725 rpm INPUT 750 (D) OUTPUT 2.30 rpm	1800	2.40	25	30		2.69	30580	3 / 30580 *		654		6924
	1200	1.60				2.26	35587			654		6924
	600	0.80				1.42	37110			654		6924
	100	0.13				0.43	37110			654		6924
1725 rpm INPUT 1000 (D) OUTPUT 1.73 rpm	1800	1.80	25	40		2.13	31073	2 / 28653		654		6924
	1200	1.20				1.60	31564			654		6924
	600	0.60				0.99	32062			654		6924
	100	0.10				0.30	32484			654		6924
1725 rpm INPUT 1000 (T) OUTPUT 1.73 rpm	1800	1.80	5	10 (10-1/3)	20	1.95	34466	2 / 34466 *			171	6924
	1200	1.20				1.43	34767				171	6924
	600											
	100											
1725 rpm INPUT 1500 (D) OUTPUT 1.15 rpm	1800	1.20	30	50		1.87	31750	2 / 31750 *		654		6924
	1200	0.80				1.41	31750			654		6924
	600	0.40				0.96	31750			654		6924
	100	0.07				0.29	31750			654		6924
1725 rpm INPUT 1500 (T) OUTPUT 1.15 rpm	1800	1.20	5	10 (10-1/3)	30	1.70	37110	2 / 37110 *			171	6924
	1200	0.80				1.26	37110				171	6924
	600											
	100											
1725 rpm INPUT 2000 (D) OUTPUT 0.863 rpm	1800	0.900	50	40		1.384	31812	1-1/2 / 31812 *		654		6924
	1200	0.600				1.049	32062			654		6924
	600	0.300				0.658	32314			654		6924
	100	0.050				0.217	32526			654		6924
1725 rpm INPUT 2000 (T) OUTPUT 0.863 rpm	1800	0.900	10	10 (10-1/3)	20	1.188	34918	1 / 28009			171	6924
	1200	0.600				0.878	35070				171	6924
	600											
	100											
1725 rpm INPUT 3000 (D) OUTPUT 0.575 rpm	1800	0.600	60	50		1.363	31750	1-1/2 / 31750 *		654		6924
	1200	0.400				1.054	31750			654		6924
	600	0.200				0.685	31750			654		6924
	100	0.033				0.250	31750			654		6924
1725 rpm INPUT 3000 (T) OUTPUT 0.575 rpm	1800	0.600	10	10 (10-1/3)	30	1.060	37110	1 / 34193			171	6924
	1200	0.400				0.792	37110				171	6924
	600											
	100											
1725 rpm INPUT 3600 (D) OUTPUT 0.479 rpm	1800	0.508	60	60 (59)		1.155	24961	1 / 19989		654		6924
	1200	0.333				0.901	24961			654		6924
	600	0.167				0.594	24961			654		6924
	100	0.028				0.224	24961			654		6924

★*Numbers shown in ( ) are exact ratios.*

**Motor H.P. exceeds reducer capacity. Output must be limited to torque shown.*

H Center Distance: Primary (Helical) 3.000" Secondary (Worm) 7.625"
D Center Distance: Primary 3.500" Secondary 7.625"
Maximum NEMA Motor Frame Size: 215C - 184TC Flange.
T Center Distance: Primary 2.000" Secondary 3.500" Third 7.625"
Maximum NEMA Motor Frame Size: 184C - 145TC Flange.

REDUCER NO. 13

OVERHUNG LOAD RATINGS

**OVERHUNG AND THRUST LOAD-SHAFTS (INCLUDES MOTORIZED WHERE APPLICABLE)

CVX — CVD CVT		LD - LX		LD - LX		CVX-CVD-CVT		SFD-SFT-STD			OVERALL RATIO
OUTPUT O.H.L.		OUTPUT O.H.L.									
UP	DOWN	UP	DOWN	OUTPUT THRUST DOWN	OUTPUT THRUST UP	OUTPUT THRUST DOWN	OUTPUT THRUST UP	OUTPUT THRUST TOWARDS BASE	OUTPUT THRUST AWAY FROM BASE	OUTPUT O.H.L. ‡ †	
6924	6653					6715	6092				1725 rpm INPUT
6924	6653					6715	6092				200 (D)
6924	6653					6715	6092				OUTPUT **8.63** rpm
6924	6653					6715	6092				
6924	6653					6715	6092				1725 rpm INPUT
6924	6653					6715	6092				300 (D)
6924	6653					6715	6092				OUTPUT **5.75** rpm
6924	6653					6715	6092				
6924	6653					6715	6092				1725 rpm INPUT
6924	6653					6715	6092				500 (D)
6924	6653					6715	6092				OUTPUT 3.45 rpm
6924	6653					6715	6092				
6924	6653					6715	6092				1725 rpm INPUT
6924	6653					6715	6092				750 (D)
6924	6653					6715	6092				OUTPUT 2.30 rpm
6924	6653					6715	6092				
6924	6653					6715	6092				1725 rpm INPUT
6924	6653					6715	6092				1000 (D)
6924	6653					6715	6092				OUTPUT 1.73 rpm
6924	6653					6715	6092				
6924	6653					6715	6092				1725 rpm INPUT
											1000 (T)
											OUTPUT **1.73** rpm
6924	6653					6715	6092				
6924	6653					6715	6092				1725 rpm INPUT
6924	6653					6715	6092				1500 (D)
6924	6653					6715	6092				OUTPUT 1.15 rpm
6924	6653					6715	6092				
6924	6653					6715	6092				1725 rpm INPUT
											1500 (T)
											OUTPUT **1.15** rpm
6924	6653					6715	6092				
6924	6653					6715	6092				1725 rpm INPUT
6924	6653					6715	6092				2000 (D)
6924	6653					6715	6092				OUTPUT 0.863 rpm
6924	6653					6715	6092				
6924	6653					6715	6092				1725 rpm INPUT
											2000 (T)
											OUTPUT **0.863** rpm
6924	6653					6715	6092				
6924	6653					6715	6092				1725 rpm INPUT
6924	6653					6715	6092				3000 (D)
6924	6653					6715	6092				OUTPUT 0.575 rpm
6924	6653					6715	6092				
6924	6653					6715	6092				1725 rpm INPUT
											3000 (T)
											OUTPUT **0.575** rpm
6924	6653					6715	6092				
6924	6653					6715	6092				1725 rpm INPUT
6924	6653					6715	6092				3600 (D)
6924	6653					6715	6092				OUTPUT **0.479** rpm

***Overhung Load given at one shaft diameter from housing or mounting flange.*

‡ *O.H.L. based on maximum bore. Use of smaller diameter shaft may limit O.H.L.*

5

DOUBLE AND TRIPLE REDUCTION REDUCER NO. 13

H Double Reduction Series Helical and Worm Gear
D Double Reduction Series Worm Gear
T Triple Reduction Series Worm Gear

All ratings stated are for A.G.M.A. Class 1 service.

OVERALL RATIO	INPUT SPEED R.P.M.	OUTPUT R.P.M.	RATIOS★ DOUBLE 1ST	RATIOS★ DOUBLE 2ND	RATIOS★ TRIPLE 3RD	INPUT H.P.	OUTPUT TORQUE INCH LBS.	GEARMOTOR H.P. @ 1800 / OUTPUT TORQUE INCH LBS.	HORSEPOWER TORQUE AND CBX-CTX CVX-LX INPUT O.H.L.	CBD-CVD SFD-CTD LD INPUT O.H.L.	CTT-CVT SFT INPUT O.H.L.	CBD-CTD CBX-CTX CTT OUTPUT O.H.L.
1725 rpm INPUT 5000 (T) OUTPUT 0.345 rpm	1800 1200 600 100	0.360 0.240	10	25	20	0.779 0.596	35186 35249	3/4 33230			171 171	6924 6924
1725 rpm INPUT 7500 (T) OUTPUT 0.230 rpm	1800 1200 600 100	0.240 0.160	10	25	30	0.719 0.557	37110 37110	3/4 37110 *			171 171	6924 6924
1725 rpm INPUT 10000 (T) OUTPUT 0.173 rpm	1800 1200 600 100	0.180 0.120	50	10 (10-1/3)	20	0.513 0.399	35284 35315	1/2 34405			171 171	6924 6924
1725 rpm INPUT 20000 (T) OUTPUT 0.086 rpm	1800 1200 600 100	0.090 0.060	20	25	40	0.421 0.331	32492 32518	1/2 32492 *			171 171	6924 6924
1725 rpm INPUT 30000 (T) OUTPUT 0.058 rpm	1800 1200 600 100	0.060 0.040	40	25	30	0.435 0.351	37110 37110	1/2 37110 *			171 171	6924 6924
1725 rpm INPUT 40000 (T) OUTPUT 0.043 rpm	1800 1200 600 100	0.045 0.030	40	25	40	0.346 0.277	32531 32543	1/3 29862			171 171	6924 6924
1725 rpm INPUT 50000 (T) OUTPUT 0.035 rpm	1800 1200 600 100	0.036 0.024	50	25	40	0.314 0.252	32538 32548	1/3 32538 *			171 171	6924 6924
1725 rpm INPUT 60000 (T) OUTPUT 0.029 rpm	1800 1200 600 100	0.030 0.020	60	25	40	0.308 0.247	32543 32552	1/3 32543 *			171 171	6924 6924
1725 rpm INPUT 75000 (T) OUTPUT 0.023 rpm	1800 1200 600 100	0.024 0.016	50	30	50	0.307 0.249	31750 31750	1/3 31750 *			171 171	6924 6924
1725 rpm INPUT 80000 (T) OUTPUT 0.022 rpm	1800 1200 600 100	0.023 0.015	50	40	40	0.272 0.219	32549 32556	1/4 31053			171 171	6924 6924
1725 rpm INPUT 90000 (T) OUTPUT 0.019 rpm	1800 1200 600 100	0.020 0.013	60	30	50	0.303 0.245	31750 31750	1/3 31750 *			171 171	6924 6924
1725 rpm INPUT 100000 (T) OUTPUT 0.017 rpm	1800 1200 600 100	0.018 0.012	50	50	40	0.265 0.214	32553 32558	1/4 32553			171 171	6924 6924
1725 rpm INPUT 150000 (T) OUTPUT 0.012 rpm	1800 1200 600 100	0.012 0.008	50	60	50	0.291 0.228	31118 27769	1/3 31118 *			171 171	6924 6924
1725 rpm INPUT 180000 (T) OUTPUT 0.010 rpm	1800 1200 600 100	0.010 0.007	60	60	50	0.283 0.221	29579 26377	1/4 20894			171 171	6924 6924

★*Numbers shown in ( ) are exact ratios.*

**Motor H.P. exceeds reducer capacity. Output must be limited to torque shown.*

H Center Distance: Primary (Helical) 3.000" Secondary (Worm) 7.625"
D Center Distance: Primary 3.500" Secondary 7.625"
Maximum NEMA Motor Frame Size: 215C - 184TC Flange.
T Center Distance: Primary 2.000" Secondary 3.500" Third 7.625"
Maximum NEMA Motor Frame Size: 184C - 145TC Flange.

REDUCER NO.
13

OVERHUNG LOAD RATINGS

**OVERHUNG AND THRUST LOAD-SHAFTS (INCLUDES MOTORIZED WHERE APPLICABLE)

CVX — CVD CVT		LD - LX		LD - LX		CVX-CVD-CVT		SFD-SFT-STD			OVERALL RATIO
OUTPUT O.H.L.		OUTPUT O.H.L.									
UP	DOWN	UP	DOWN	OUTPUT THRUST DOWN	OUTPUT THRUST UP	OUTPUT THRUST DOWN	OUTPUT THRUST UP	OUTPUT THRUST TOWARDS BASE	OUTPUT THRUST AWAY FROM BASE	OUTPUT O.H.L. ‡ †	
6924 6924	6653 6653					6715 6715	6092 6092				1725 rpm INPUT 5000 (T) OUTPUT 0.345 rpm
6924 6924	6653 6653					6715 6715	6092 6092				1725 rpm INPUT 7500 (T) OUTPUT 0.230 rpm
6924 6924	6653 6653					6715 6715	6092 6092				1725 rpm INPUT 10000 (T) OUTPUT **0.173**rpm
6924 6924	6653 6653					6715 6715	6092 6092				1725 rpm INPUT 20000 (T) OUTPUT 0.086 rpm
6924 6924	6653 6653					6715 6715	6092 6092				1725 rpm INPUT 30000 (T) OUTPUT 0.058 rpm
6924 6924	6653 6653					6715 6715	6092 6092				1725 rpm INPUT 40000 (T) OUTPUT 0.043 rpm
6924 6924	6653 6653					6715 6715	6092 6092				1725 rpm INPUT 50000 (T) OUTPUT 0.035 rpm
6924 6924	6653 6653					6715 6715	6092 6092				1725 rpm INPUT 60000 (T) OUTPUT 0.029 rpm
6924 6924	6653 6653					6715 6715	6092 6092				1725 rpm INPUT 75000 (T) OUTPUT 0.023 rpm
6924 6924	6653 6653					6715 6715	6092 6092				1725 rpm INPUT 80000 (T) OUTPUT 0.022 rpm
6924 6924	6653 6653					6715 6715	6092 6092				1725 rpm INPUT 90000 (T) OUTPUT 0.019 rpm
6924 6924	6653 6653					6715 6715	6092 6092				1725 rpm INPUT 100000 (T) OUTPUT 0.017 rpm
6924 6924	6653 6653					6715 6715	6092 6092				1725 rpm INPUT 150000 (T) OUTPUT 0.012 rpm
6924 6924	6653 6653					6715 6715	6092 6092				1725 rpm INPUT 180000 (T) OUTPUT 0.010 rpm

***Overhung Load given at one shaft diameter from housing or mounting flange.*

‡ O.H.L. based on maximum bore. Use of smaller diameter shaft may limit O.H.L.

5

DOUBLE AND TRIPLE REDUCTION REDUCER NO. 14

H Double Reduction Series Helical and Worm Gear
D Double Reduction Series Worm Gear
T Triple Reduction Series Worm Gear

All ratings stated are for A.G.M.A. Class 1 service.

HORSEPOWER TORQUE AND

OVERALL RATIO	INPUT SPEED R.P.M.	OUTPUT R.P.M.	RATIOS★ DOUBLE 1ST	RATIOS★ DOUBLE 2ND	RATIOS★ TRIPLE 3RD	INPUT H.P.	OUTPUT TORQUE INCH LBS.	GEARMOTOR H.P. @ 1800 / OUTPUT TORQUE INCH LBS.	CBX-CTX CVX-LX INPUT O.H.L.	CBD-CVD SFD-CTD LD INPUT O.H.L.	CTT-CVT SFT INPUT O.H.L.	CBD-CTD CBX-CTX CTT OUTPUT O.H.L.
1725 rpm INPUT 50 (H) OUTPUT 34.5 rpm	1800	36.00	2	25 (25-1/2)		15.55	21557		414			7438
	1200	24.00				11.90	24100		414			7438
	600	12.00				6.37	24100		414			7438
	100	2.00				1.36	24100		414			7438
1725 rpm INPUT 60 (H) OUTPUT 28.75 rpm	1800	30.00	2	30 (32)		12.09	21622		414			7438
	1200	20.00				10.33	27075		414			7438
	600	10.00				6.26	31019		414			7438
	100	1.67				1.21	27957		414			7438
1725 rpm INPUT 75 (H) OUTPUT 23.00 rpm	1800	24.00	3	25 (25-1/2)		11.16	22500		414			7438
	1200	16.00				7.74	22500		414			7438
	600	8.00				4.18	22500		414			7438
	100	1.33				.91	22500		414			7438
1725 rpm INPUT 75 (D) OUTPUT 23.00 rpm	1800	24.00	7-1/2 (7-1/4)	10 (9-1/2)		9.00	17497	10 / 17497 *		525		7438
	1200	16.00				7.61	21745			525		7438
	600	8.00				5.55	30195			525		7438
	100	1.33				1.41	37115			525		7438
1725 rpm INPUT 80 (H) OUTPUT 21.56 rpm	1800	22.50	2	40 (38)		10.86	21408		414			7438
	1200	15.00				9.31	26777		414			7438
	600	7.50				6.45	34956		414			7438
	100	1.25				1.21	30610		414			7438
1725 rpm INPUT 90 (H) OUTPUT 19.17 rpm	1800	20.00	3	30 (32)		10.33	27075		414			7438
	1200	13.33				7.63	29044		414			7438
	600	6.67				4.07	29000		414			7438
	100	1.11				.78	25124		414			7438
1725 rpm INPUT 100 (H) OUTPUT 17.25 rpm	1800	18.00	2	50 (51)		8.89	20497		414			7438
	1200	12.00				7.66	25639		414			7438
	600	6.00				5.34	33080		414			7438
	100	1.00				1.26	33080		414			7438
1725 rpm INPUT 100 (D) OUTPUT 17.25 rpm	1800	18.00	10 (9-3/4)	10 (9-1/2)		7.34	18907	7-1/2 / 18907		525		7438
	1200	12.00				6.20	23255			525		7438
	600	6.00				4.32	30631			525		7438
	100	1.00				1.02	34326			525		7438
1725 rpm INPUT 120 (H) OUTPUT 14.38 rpm	1800	15.00	3	40 (38)		9.31	26777		414			7438
	1200	10.00				7.85	32787		414			7438
	600	5.00				4.20	32488		414			7438
	100	.83				.78	27308		414			7438
1725 rpm INPUT 150 (H) OUTPUT 11.50 rpm	1800	12.00	3	50 (51)		7.66	25639		414			7438
	1200	8.00				6.50	31382		414			7438
	600	4.00				3.81	33080		414			7438
	100	0.67				.91	33080		414			7438
1725 rpm INPUT 150 (D) OUTPUT 11.50 rpm	1800	12.00	7-1/2 (7-1/4)	20 (19)		8.98	32220	10 / 32220 *		525		7438
	1200	8.00				7.61	39604			525		7438
	600	4.00				4.31	41397			525		7438
	100	.67				.97	41397			525		7438
1725 rpm INPUT 180 (H) OUTPUT 9.58 rpm	1800	10.00	3	60		6.44	24466		414			7438
	1200	6.67				5.34	29094		414			7438
	600	3.33				3.38	33260		414			7438
	100	0.56				.82	33260		414			7438
1725 rpm INPUT 200 (D) OUTPUT 8.62 rpm	1800	9.00	10 (9-3/4)	20 (19)		7.34	34542	7-1/2 / 34542		525		7438
	1200	6.00				6.12	41397			525		7438
	600	3.00				3.34	41397			525		7438
	100	.50				.77	41397			525		7438

★*Numbers shown in ( ) are exact ratios.*

**Motor H.P. exceeds reducer capacity. Output must be limited to torque shown.*

H Center Distance: Primary (Helical) 3.000" Secondary (Worm) 8.125"

D Center Distance: Primary 4.000" Secondary 8.125"
Maximum NEMA Motor Frame Size: 215C - 184TC

T Center Distance: Primary 2.625" Secondary 4.000" Third 8.125"
Maximum NEMA Motor Frame Size: 184C - 145TC Flange.

REDUCER NO. 14

OVERHUNG LOAD RATINGS

**OVERHUNG AND THRUST LOAD-SHAFTS (INCLUDES MOTORIZED WHERE APPLICABLE)

CVX — CVD CVT		LD - LX		LD - LX		CVX-CVD-CVT		SFD-SFT-STD			OVERALL RATIO
OUTPUT O.H.L.		OUTPUT O.H.L.									
UP	DOWN	UP	DOWN	OUTPUT THRUST DOWN	OUTPUT THRUST UP	OUTPUT THRUST DOWN	OUTPUT THRUST UP	OUTPUT THRUST TOWARDS BASE	OUTPUT THRUST AWAY FROM BASE	OUTPUT O.H.L. ‡ †	
7438	7353					6613	6613				1725 rpm INPUT
7438	7353					6613	6613				50 (H)
7438	7353					6613	6613				OUTPUT 34.5 rpm
7438	7353					6613	6613				
7438	7353					6613	6613				1725 rpm INPUT
7438	7353					6613	6613				60 (H)
7438	7353					6613	6613				OUTPUT 28.75 rpm
7438	7353					6613	6613				
7438	7353					6613	6613				1725 rpm INPUT
7438	7353					6613	6613				75 (H)
7438	7353					6613	6613				OUTPUT 23.00 rpm
7438	7353					6613	6613				
7438	7353					6613	6613				1725 rpm INPUT
7438	7353					6613	6613				75 (D)
7438	7353					6613	6613				OUTPUT 23.00 rpm
7438	7353					6613	6613				
7438	7353					6613	6613				1725 rpm INPUT
7438	7353					6613	6613				80 (H)
7438	7353					6613	6613				OUTPUT 21.56 rpm
7438	7353					6613	6613				
7438	7353					6613	6613				1725 rpm INPUT
7438	7353					6613	6613				90 (H)
7438	7353					6613	6613				OUTPUT 19.17 rpm
7438	7353					6613	6613				
7438	7353					6613	6613				1725 rpm INPUT
7438	7353					6613	6613				100 (H)
7438	7353					6613	6613				OUTPUT 17.25 rpm
7438	7353					6613	6613				
7438	7353					6613	6613				1725 rpm INPUT
7438	7353					6613	6613				100 (D)
7438	7353					6613	6613				OUTPUT 17.25 rpm
7438	7353					6613	6613				
7438	7353					6613	6613				1725 rpm INPUT
7438	7353					6613	6613				120 (H)
7438	7353					6613	6613				OUTPUT 14.38 rpm
7438	7353					6613	6613				
7438	7353					6613	6613				1725 rpm INPUT
7438	7353					6613	6613				150 (H)
7438	7353					6613	6613				OUTPUT 11.50 rpm
7438	7353					6613	6613				
7438	7353					6613	6613				1725 rpm INPUT
7438	7353					6613	6613				150 (D)
7438	7353					6613	6613				OUTPUT 11.50 rpm
7438	7353					6613	6613				
7438	7353					6613	6613				1725 rpm INPUT
7438	7353					6613	6613				180 (H)
7438	7353					6613	6613				OUTPUT 9.58 rpm
7438	7353					6613	6613				
7438	7353					6613	6613				1725 rpm INPUT
7438	7353					6613	6613				200 (D)
7438	7353					6613	6613				OUTPUT 8.62 rpm

***Overhung Load given at one shaft diameter from housing or mounting flange.*

‡ O.H.L. based on maximum bore. Use of smaller diameter shaft may limit O.H.L.

5

DOUBLE AND TRIPLE REDUCTION REDUCER NO. 14

H Double Reduction Series Helical and Worm Gear
D Double Reduction Series Worm Gear
T Triple Reduction Series Worm Gear

All ratings stated are for A.G.M.A. Class 1 service.

OVERALL RATIO	INPUT SPEED R.P.M.	OUTPUT R.P.M.	RATIOS★ DOUBLE 1ST	RATIOS★ DOUBLE 2ND	RATIOS★ TRIPLE 3RD	INPUT H.P.	OUTPUT TORQUE INCH LBS.	GEARMOTOR H.P. @ 1800 / OUTPUT TORQUE INCH LBS.	HORSEPOWER TORQUE AND: CBX-CTX CVX-LX INPUT O.H.L.	CBD-CVD SFD-CTD LD INPUT O.H.L.	CTT-CVT SFT INPUT O.H.L.	CBD-CTD CBX-CTX CTT OUTPUT O.H.L.
1725 rpm INPUT 300 (D) OUTPUT 5.75 rpm	1800	6.00	10 (9-3/4)	30 (32)		5.18	40057	5 / 34690 ☆		525		7438
	1200	4.00				3.82	42451			525		7438
	600	2.00				2.21	44987			525		7438
	100	.33				.65	47182			525		7438
1625 rpm INPUT 500 (D) OUTPUT 3.45 rpm	1800	3.60	25 (26)	20 (19)		3.36	34825	3 / 30801		525		7438
	1200	2.40				2.81	41397			525		7438
	600	1.20				1.60	41397			525		7438
	100	.20				.40	39112			525		7438
1725 rpm INPUT 750 (D) OUTPUT 2.30 rpm	1800	2.40	25 (26)	30 (32)		2.43	44662	3 / 44662		525		7438
	1200	1.60				1.75	45644			525		7438
	600	.80				1.00	46649			525		7438
	100	.13				.37	47182			525		7438
1725 rpm INPUT 1000 (D) OUTPUT 1.73 rpm	1800	1.80	25 (26)	40 (38)		2.60	42459	3 / 42459 ☆		525		7438
	1200	1.20				1.89	42459			525		7438
	600	.60				1.12	42459			525		7438
	100	0.10				.33	42459			525		7438
1725 rpm INPUT 1000 (T) OUTPUT 1.73 rpm	1800	1.80	10	10 (9-3/4)	10 (9-1/2)	2.21	40307	2 / 36248			349	7438
	1200	1.20				1.58	40040				349	7438
	600											
	100											
1725 rpm INPUT 1500 (D) OUTPUT 1.15 rpm	1800	1.20	50 (51)	30 (32)		1.28	41678	1-1/2 / 41678 ☆		525		7438
	1200	.80				1.01	46629			525		7438
	600	.40				.58	47149			525		7438
	100	.07				.29	47189			525		7438
1725 rpm INPUT 1500 (T) OUTPUT 1.33 rpm	1800	1.20	20	7-1/2 (7-1/4)	10 (9-1/2)	1.69	39642	1-1/2 / 34868			349	7438
	1200	.80				1.29	41668				349	7438
	600											
	100											
1725 rpm INPUT 2000 (D) OUTPUT .86 rpm	1800	.900	50 (51)	40 (38)		1.72	42458	2 / 42459 ☆		525		7438
	1200	.600				1.29	42458			525		7438
	600	.300				.79	42458			525		7438
	100	.050				.26	42458			525		7438
1725 rpm INPUT 2000 (T) OUTPUT .86 rpm	1800	.900	20	10 (9-3/4)	10 (9-1/2)	1.33	39483	1-1/2 / 39483 ☆		525	349	7438
	1200	.600				.95	38305			525	349	7438
	600											
	100											
1725 rpm INPUT 3000 (D) OUTPUT .58 rpm	1800	.600	50 (51)	60		1.40	33260	1-1/2 / 33260 ☆		525		7438
	1200	.400				1.05	33260			525		7438
	600	.200				.65	33260			525		7438
	100	.033				.21	33260			525		7438
1725 rpm INPUT 3000 (T) OUTPUT .58 rpm	1800	.600	10	10 (9-3/4)	30 (32)	1.18	47182	1 / 38996 ☆		525	349	7438
	1200	.400				.88	47182			525	349	7438
	600											
	100											
1725 rpm INPUT 3600 (D) OUTPUT .479 rpm	1800	.500	60	60		1.30	33260	1-1/2 / 33260 ☆		525		7438
	1200	.333				.98	33260			525		7438
	600	.167				.61	33260			525		7438
	100	.028				.21	33260			525		7438
1725 rpm INPUT 5000 (T) OUTPUT .345 rpm	1800	.360	25	10 (9-3/4)	20 (19)	.79	42459	3/4 / 40014		525	349	7438
	1200	.240				.60	42459			525	349	7438
	600											
	100											

★*Numbers shown in ( ) are exact ratios.*

**Motor H.P. exceeds reducer capacity. Output must be limited to torque shown.*

H Center Distance: Primary (Helical) 3.000" Secondary (Worm) 8.125"
D Center Distance: Primary 4.000" Secondary 8.125"
Maximum NEMA Motor Frame Size: 215C - 184TC
T Center Distance: Primary 2.625" Secondary 4.000" Third 8.125"
Maximum NEMA Motor Frame Size: 184C - 145TC Flange.

REDUCER NO. 14

OVERHUNG LOAD RATINGS

**OVERHUNG AND THRUST LOAD-SHAFTS (INCLUDES MOTORIZED WHERE APPLICABLE)

CVX — CVD CVT		LD - LX		LD - LX		CVX-CVD-CVT		SFD-SFT-STD			OVERALL RATIO
OUTPUT O.H.L.		OUTPUT O.H.L.									
UP	DOWN	UP	DOWN	OUTPUT THRUST DOWN	OUTPUT THRUST UP	OUTPUT THRUST DOWN	OUTPUT THRUST UP	OUTPUT THRUST TOWARDS BASE	OUTPUT THRUST AWAY FROM BASE	OUTPUT O.H.L. ‡ ‡	
7438 7438 7438 7438	7353 7353 7353 7353					6613 6613 6613 6613	6613 6613 6613 6613				1725 rpm INPUT 300 (D) OUTPUT 5.75rpm
7438 7438 7438 7438	7353 7353 7353 7353					6613 6613 6613 6613	6613 6613 6613 6613				1725 rpm INPUT 500 (D) OUTPUT 3.45rpm
7438 7438 7438 7438	7353 7353 7353 7353					6613 6613 6613 6613	6613 6613 6613 6613				1725 rpm INPUT 750 (D) OUTPUT 2.30rpm
7438 7438 7438 7438	7353 7353 7353 7353					6613 6613 6613 6613	6613 6613 6613 6613				1725 rpm INPUT 1000 (D) OUTPUT 1.73rpm
7438 7438	7353 7353					6613 6613	6613 6613				1725 rpm INPUT 1000 (T) OUTPUT 1.73 rpm
7438 7438 7438 7438	7353 7353 7353 7353					6613 6613 6613 6613	6613 6613 6613 6613				1725 rpm INPUT 1500 (D) OUTPUT 1.15rpm
7438 7438	7353 7353					6613 6613	6613 6613				1725 rpm INPUT 1500 (T) OUTPUT 1.33rpm
7438 7438 7438 7438	7353 7353 7353 7353					6613 6613 6613 6613	6613 6613 6613 6613				1725 rpm INPUT 2000 (D) OUTPUT .86 rpm
7438 7438	7353 7353					6613 6613	6613 6613				1725 rpm INPUT 2000 (T) OUTPUT .86 rpm
7438 7438 7438 7438	7353 7353 7353 7353					6613 6613 6613 6613	6613 6613 6613 6613				1725 rpm INPUT 3000 (D) OUTPUT .58 rpm
7438 7438	7353 7353					6613 6613	6613 6613				1725 rpm INPUT 3000 (T) OUTPUT .58 rpm
7438 7438 7438 7438	7353 7353 7353 7353					6613 6613 6613 6613	6613 6613 6613 6613				1725 rpm INPUT 3600 (D) OUTPUT .479 rpm
7438 7438 7438 7438	7353 7353 7353 7353					6613 6613 6613 6613	6613 6613 6613 6613				1725 rpm INPUT 5000 (T) OUTPUT .345rpm

***Overhung Load given at one shaft diameter from housing or mounting flange.*

‡ O.H.L. based on maximum bore. Use of smaller diameter shaft may limit O.H.L.

5

DOUBLE AND TRIPLE REDUCTION REDUCER NO. 14

H Double Reduction Series Helical and Worm Gear
D Double Reduction Series Worm Gear
T Triple Reduction Series Worm Gear

All ratings stated are for A.G.M.A. Class 1 service.

HORSEPOWER TORQUE AND

OVERALL RATIO	INPUT SPEED R.P.M.	OUTPUT R.P.M.	RATIOS★ DOUBLE 1ST	RATIOS★ DOUBLE 2ND	RATIOS★ TRIPLE 3RD	INPUT H.P.	OUTPUT TORQUE INCH LBS.	GEARMOTOR H.P. @ 1800 / OUTPUT TORQUE INCH LBS.	CBX-CTX CVX-LX INPUT O.H.L.	CBD-CVD SFD-CTD LD INPUT O.H.L.	CTT-CVT SFT INPUT O.H.L.	CBD-CTD CBX-CTX CTT OUTPUT O.H.L.
1725 rpm INPUT 7500 (T) OUTPUT .230 rpm	1800 1200 600 100	.240 .160	10	25 (26)	30 (32)	.672 .517	47182 47182	3/4 47182 *			349 349	7438 7438
1725 rpm INPUT 10000 (T) OUTPUT .172 rpm	1800 1200 600 100	.180 .120	20	25 (26)	20 (19)	.537 .416	42459 42459	1/2 38787			349 349	7438 7438
1725 rpm INPUT 20000 (T) OUTPUT .086 rpm	1800 1200 600 100	.090 .060	20	25 (26)	40 (38)	.426 .336	42459 42459	1/2 42459 *			349 349	7438 7438
1725 rpm INPUT 30000 (T) OUTPUT 0.058 rpm	1800 1200 600 100	.060 .040	40	25 (26)	30 (32)	.368 .289	47182 45383	1/3 40887			349 349	7438 7438
1725 rpm INPUT 40000 (T) OUTPUT .043 rpm	1800 1200 600 100	.045 .030	40	25 (26)	40 (38)	.335 .271	42459 42459	1/3 42171			349 349	7438 7438
1725 rpm INPUT 50000 (T) OUTPUT .034 rpm	1800 1200 600 100	.036 .024	50	25 (26)	40 (38)	.303 .245	42459 42459	1/3 42459 *			349 349	7438 7438
1725 rpm INPUT 60000 (T) OUTPUT .029 rpm	1800 1200 600 100	.030 .020	40	50 (51)	30 (32)	.282 .214	39473 35019	1/3 39473 *			349 349	7438 7438
1725 rpm INPUT 75000 (T) OUTPUT 0.023 rpm	1800 1200 600 100	.024 .016	50	50 (51)	30 (37)	.249 .190	36983 32703	1/4 36983 *			349 349	7438 7438
1725 rpm INPUT 80000 (T) OUTPUT .022 rpm	1800 1200 600 100	.022 .015	40	50 (51)	40 (38)	.283 .215	40422 35664	1/4 33129			349 349	7438 7438
1725 rpm INPUT 90000 (T) OUTPUT .019 rpm	1800 1200 600 100	.020 .013	60	50 (51)	30 (32)	.232 .178	35019 30883	1/4 35019 *			349 349	7438 7438
1725 rpm INPUT 100000 (T) OUTPUT .017 rpm	1800 1200 600 100	.018 .012	50	50 (51)	40 (38)	.249 .190	37755 33210	1/4 37755 *			349 349	7438 7438
1725 rpm INPUT 150000 (T) OUTPUT .011 rpm	1800 1200 600 100	.012 .008	50	50 (51)	60	.268 .216	33260 33260	1/4 32287			349 349	7438 7438
1725 rpm INPUT 180000 (T) OUTPUT .010 rpm	1800 1200 600 100	.010 .007	60	50 (51)	60	.259 .210	33260 33260	1/4 33260			349 349	7438 7438

★*Numbers shown in ( ) are exact ratios.*

**Motor H.P. exceeds reducer capacity. Output must be limited to torque shown.*

H Center Distance: Primary (Helical) 3.000" Secondary (Worm) 8.125"
D Center Distance: Primary 4.000" Secondary 8.125"
Maximum NEMA Motor Frame Size: 215C - 184TC
T Center Distance: Primary 2.625" Secondary 4.000" Third 8.125"
Maximum NEMA Motor Frame Size: 184C - 145TC Flange.

REDUCER NO.
14

OVERHUNG LOAD RATINGS

**OVERHUNG AND THRUST LOAD-SHAFTS (INCLUDES MOTORIZED WHERE APPLICABLE)

CVX — CVD CVT		LD - LX		LD - LX		CVX-CVD-CVT		SFD-SFT-STD			OVERALL RATIO
OUTPUT O.H.L.		OUTPUT O.H.L.									
UP	DOWN	UP	DOWN	OUTPUT THRUST DOWN	OUTPUT THRUST UP	OUTPUT THRUST DOWN	OUTPUT THRUST UP	OUTPUT THRUST TOWARDS BASE	OUTPUT THRUST AWAY FROM BASE	OUTPUT O.H.L. ‡ †	
7438 7438	7353 7353					6613 6613	6613 6613				1725 rpm INPUT 7500 (T) OUTPUT .230 rpm
7438 7438	7353 7353					6613 6613	6613 6613				1725 rpm INPUT 10000 (T) OUTPUT .172 rpm
7438 7438	7353 7353					6613 6613	6613 6613				1725 rpm INPUT 20000 (T) OUTPUT .086 rpm
7438 7438	7353 7353					6613 6613	6613 6613				1725 rpm INPUT 30000 (T) OUTPUT 0.058 rpm
7438 7438	7353 7353					6613 6613	6613 6613				1725 rpm INPUT 40000 (T) OUTPUT .043 rpm
7438 7438	7353 7353					6613 6613	6613 6613				1725 rpm INPUT 50000 (T) OUTPUT .034 rpm
7438 7438	7353 7353					6613 6613	6613 6613				1725 rpm INPUT 60000 (T) OUTPUT .029 rpm
7438 7438	7353 7353					6613 6613	6613 6613				1725 rpm INPUT 75000 (T) OUTPUT 0.023 rpm
7438 7438	7353 7353					6613 6613	6613 6613				1725 rpm INPUT 80000 (T) OUTPUT .022 rpm
7438 7438	7353 7353					6613 6613	6613 6613				1725 rpm INPUT 90000 (T) OUTPUT .019 rpm
7438 7438	7353 7353					6613 6613	6613 6613				1725 rpm INPUT 100000 (T) OUTPUT .017 rpm
7438 7438	7353 7353					6613 6613	6613 6613				1725 rpm INPUT 150000 (T) OUTPUT .011 rpm
7438 7438	7353 7353					6613 6613	6613 6613				1725 rpm INPUT 180000 (T) OUTPUT .010 rpm

***Overhung Load given at one shaft diameter from housing or mounting flange.*

‡ O.H.L. based on maximum bore. Use of smaller diameter shaft may limit O.H.L.

5

DOUBLE AND TRIPLE REDUCTION REDUCER NO. 15

H Double Reduction Series Helical and Worm Gear
D Double Reduction Series Worm Gear
T Triple Reduction Series Worm Gear

All ratings stated are for A.G.M.A. Class 1 service.

HORSEPOWER TORQUE AND

OVERALL RATIO	INPUT SPEED R.P.M.	OUTPUT R.P.M.	RATIOS★ DOUBLE 1ST	RATIOS★ DOUBLE 2ND	RATIOS★ TRIPLE 3RD	INPUT H.P.	OUTPUT TORQUE INCH LBS.	GEARMOTOR H.P. @ 1800 / OUTPUT TORQUE INCH LBS.	CBX-CTX CVX-LX INPUT O.H.L.	CBD-CVD SFD-CTD LD INPUT O.H.L.	CTT-CVT SFT INPUT O.H.L.	CBD-CTD CBX-CTX CTT OUTPUT O.H.L.
1725 rpm INPUT	1800	24.00				15.90	30863			562		15496
75 (D)	1200	16.00	7-1/2	10		13.43	38344	15		562		15496
	600	8.00				10.06	54957	28972		562		15496
OUTPUT 23.00 rpm	100	1.33	(7-1/4)	(9-3/4)		2.37	62077			562		15496
1725 rpm INPUT	1800	18.00				12.78	34092			562		15496
100 (D)	1200	12.00	10	10		10.79	42328	15		562		15496
	600	6.00				7.85	58552	34092		562		15496
OUTPUT 17.25 rpm	100	1.00	(10-1/4)	(9-3/4)		1.77	62351	*		562		15496
1725 rpm INPUT	1800	12.00				10.84	45855			562		15496
150 (D)	1200	8.00	10	15		7.87	48220	10		562		15496
	600	4.00				4.44	50707	42165		562		15496
OUTPUT 11.50 rpm	100	.67	(10-1/4)	(15-1/4)		1.01	52877			562		15496
1725 rpm INPUT	1800	9.00				11.72	56980			562		15496
200 (D)	1200	6.00	10	20		8.67	60517	10		562		15496
	600	3.00				5.06	64076	47725		562		15496
OUTPUT 8.63 rpm	100	0.50	(10-1/4)	(19-1/2)		1.17	64076			562		15496
1725 rpm INPUT	1800	6.00				6.45	47328			562		15496
300 (D)	1200	4.00	10	30		4.74	49670	7-1/2		562		15496
	600	2.00				2.75	52128	47328		562		15496
OUTPUT 5.75 rpm	100	.33	(10-1/4)	(30-1/2)		.68	54269	*		562		15496
1725 rpm INPUT	1800	3.60				6.35	62173			562		15496
500 (D)	1200	2.40	25	20		4.65	64076	7-1/2		562		15496
	600	1.20				2.65	64076	62173		562		15496
OUTPUT 3.45 rpm	100	0.20		(19-1/2)		.68	64076	*		562		15496
1725 rpm INPUT	1800	2.40				3.49	51552			562		15496
750 (D)	1200	1.60	25	30		2.55	52583	3		562		15496
	600	0.80				1.50	53635	43426		562		15496
OUTPUT 2.30 rpm	100	0.13		(30-1/2)		.41	54528			562		15496
1725 rpm INPUT	1800	1.80				4.29	63234			562		15496
1000 (D)	1200	1.20	25	40		3.17	64075	5		562		15496
	600	0.60				1.88	64075	63234		562		15496
OUTPUT 1.73 rpm	100	0.10		(39)		.53	64075	*		562		15496
1725 rpm INPUT	1800	1.80				3.43	64076				349	15496
1000 (T)	1200	1.20	5	10	20	2.47	64076	3			349	15496
	600							49700				
OUTPUT 1.73 rpm	100			(10-1/4)	(19-1/2)							
1725 rpm INPUT	1800	1.20				2.29	53107			562		15496
1500 (D)	1200	0.80	50	30		1.70	53635	2		562		15496
	600	0.40				1.03	54169	45135		562		15496
OUTPUT 1.15 rpm	100	0.07		(30-1/2)		.32	54618			562		15496

★*Numbers shown in ( ) are exact ratios.*

**Motor H.P. exceeds reducer capacity. Output must be limited to torque shown.*

D Center Distance: Primary 5.167" Secondary 9.000"
Maximum NEMA Motor Frame Size: 56C thru 256TC Flange.
T Center Distance: Primary 2.625" Secondary 5.167" Third 9.000"
Maximum NEMA Motor Frame Size: 184C - 145TC Flange.

REDUCER NO. 15

OVERHUNG LOAD RATINGS

**OVERHUNG AND THRUST LOAD-SHAFTS (INCLUDES MOTORIZED WHERE APPLICABLE)

CVX — CVD CVT		LD - LX		LD - LX		CVX-CVD-CVT		SFD-SFT-STD			OVERALL RATIO
OUTPUT O.H.L.		OUTPUT O.H.L.									
UP	DOWN	UP	DOWN	OUTPUT THRUST DOWN	OUTPUT THRUST UP	OUTPUT THRUST DOWN	OUTPUT THRUST UP	OUTPUT THRUST TOWARDS BASE	OUTPUT THRUST AWAY FROM BASE	OUTPUT O.H.L. ‡ †	
15496	15484					7000	7000				1725 rpm INPUT
15496	15484					7000	7000				75 (D)
15496	15484					7000	7000				
15496	15484					7000	7000				OUTPUT 23.00 rpm
15496	15484					7000	7000				1725 rpm INPUT
15496	15484					7000	7000				100 (D)
15496	15484					7000	7000				
15496	15484					7000	7000				OUTPUT 17.25 rpm
15496	15484					7000	7000				1725 rpm INPUT
15496	15484					7000	7000				150 (D)
15496	15484					7000	7000				
15496	15484					7000	7000				OUTPUT 11.50 rpm
15496	15484					7000	7000				1725 rpm INPUT
15496	15484					7000	7000				200 (D)
15496	15484					7000	7000				
15496	15484					7000	7000				OUTPUT 8.63 rpm
15496	15484					7000	7000				1725 rpm INPUT
15496	15484					7000	7000				300 (D)
15496	15484					7000	7000				
15496	15484					7000	7000				OUTPUT 5.75 rpm
15496	15484					7000	7000				1725 rpm INPUT
15496	15484					7000	7000				500 (D)
15496	15484					7000	7000				
15496	15484					7000	7000				OUTPUT 3.45 rpm
15496	15484					7000	7000				1725 rpm INPUT
15496	15484					7000	7000				750 (D)
15496	15484					7000	7000				
15496	15484					7000	7000				OUTPUT 2.30 rpm
15496	15484					7000	7000				1725 rpm INPUT
15496	15484					7000	7000				1000 (D)
15496	15484					7000	7000				
15496	15484					7000	7000				OUTPUT 1.73 rpm
15496	15484					7000	7000				1725 rpm INPUT
15496	15484					7000	7000				1000 (T)
											OUTPUT 1.73 rpm
15496	15484					7000	7000				1725 rpm INPUT
15496	15484					7000	7000				1500 (D)
15496	15484					7000	7000				
15496	15484					7000	7000				OUTPUT 1.15 rpm

***Overhung Load given at one shaft diameter from housing or mounting flange.*

‡ O.H.L. based on maximum bore. Use of smaller diameter shaft may limit O.H.L.

5

DOUBLE AND TRIPLE REDUCTION REDUCER NO. 15

H Double Reduction Series Helical and Worm Gear
D Double Reduction Series Worm Gear
T Triple Reduction Series Worm Gear

All ratings stated are for A.G.M.A. Class 1 service.

HORSEPOWER TORQUE AND

OVERALL RATIO	INPUT SPEED R.P.M.	OUTPUT R.P.M.	RATIOS★ DOUBLE 1ST	RATIOS★ DOUBLE 2ND	RATIOS★ TRIPLE 3RD	INPUT H.P.	OUTPUT TORQUE INCH LBS.	GEARMOTOR H.P. @ 1800 / OUTPUT TORQUE INCH LBS.	CBX-CTX CVX-LX INPUT O.H.L.	CBD-CVD SFD-CTD LD INPUT O.H.L.	CTT-CVT SFT INPUT O.H.L.	CBD-CTD CBX-CTX CTT OUTPUT O.H.L.
1725 rpm INPUT	1800	1.20				2.18	57483				349	15496
1500 (T)	1200	.80	5	10	30	1.59	57483	2			349	15496
	600							52108				
OUTPUT 1.15 rpm	100			(10-1/4)	(30-1/2)							
1725 rpm INPUT	1800	.90				2.933	64075			562		15496
2000 (D)	1200	.60	50	40		2.167	64075	3		562		15496
	600	.30				1.320	64075	64075		562		15496
OUTPUT .863 rpm	100	.05		(39)		419	64075	*		562		15496
1725 rpm INPUT	1800	.901				2.008	64076				349	15496
2000 (T)	1200	.600	10	10	20	1.462	64076	2			349	15496
	600							57298				
OUTPUT .863 rpm	100			(10-1/4)	(19-1/2)							
1725 rpm INPUT	1800	.60				2.103	52354			562		15496
3000 (D)	1200	.40	60	50		1.561	52354	2		562		15496
	600	.20				.963	52354	48258		562		15496
OUTPUT .575 rpm	100	.03		(51)		321	52354			562		15496
1725 rpm INPUT	1800	.600				1.31	57483				349	15496
3000 (T)	1200	.400	10	10	30	.968	57483	1-1/2			349	15496
	600							57483				
OUTPUT .575 rpm	100			(10-1/4)	(30-1/2)			*				
1725 rpm INPUT	1800	.500				1.440	48070			562		15496
3600 (D)	1200	.333	60	60		1.090	48070	1-1/2		562		15496
	600	.167				.690	48070	48070		562		15496
OUTPUT .479 rpm	100	.028				.234	48070	*		562		15496
1725 rpm INPUT	1800	.360				1.088	64076				349	15496
5000 (T)	1200	.240	25	10	20	.817	64076	1			349	15496
	600							56940				
OUTPUT .345 rpm	100			(10-1/4)	(19-1/2)							
1725 rpm INPUT	1800	.240				.775	57483				349	15496
7500 (T)	1200	.160	10	25	30	.590	57483	3/4			349	15496
	600							55123				
OUTPUT .230 rpm	100				(30-1/2)							
1725 rpm INPUT	1800	1.80				.799	64076				349	15496
10000 (T)	1200	1.20	20	25	20	.613	64076	3/4			349	15496
	600							58026				
OUTPUT .173 rpm	100				(19-1/2)							
1725 rpm INPUT	1800	.090				.636	64076				349	15496
20000 (T)	1200	.060	20	25	40	.496	64076	3/4			349	15496
	600							64076				
OUTPUT .086 rpm	100				(39)			*				

★*Numbers shown in ( ) are exact ratios.*

**Motor H.P. exceeds reducer capacity. Output must be limited to torque shown.*

D Center Distance: Primary 5.167" Secondary 9.000"
Maximum NEMA Motor Frame Size: 56C thru 256TC Flange.
T Center Distance: Primary 2.625" Secondary 5.167" Third 9.000"
Maximum NEMA Motor Frame Size: 184C - 145TC Flange.

REDUCER NO. 15

OVERHUNG LOAD RATINGS

**OVERHUNG AND THRUST LOAD-SHAFTS (INCLUDES MOTORIZED WHERE APPLICABLE)

CVX — CVD CVT		LD - LX		LD - LX		CVX-CVD-CVT		SFD-SFT-STD			OVERALL RATIO
OUTPUT O.H.L.		OUTPUT O.H.L.									
UP	DOWN	UP	DOWN	OUTPUT THRUST DOWN	OUTPUT THRUST UP	OUTPUT THRUST DOWN	OUTPUT THRUST UP	OUTPUT THRUST TOWARDS BASE	OUTPUT THRUST AWAY FROM BASE	OUTPUT O.H.L. ‡ †	
15496 15496	15484 15484					7000 7000	7000 7000				1725 rpm INPUT 1500 (T) OUTPUT 1.15 rpm
15496 15496 15496 15496	15484 15484 15484 15484					7000 7000 7000 7000	7000 7000 7000 7000				1725 rpm INPUT 2000 (D) OUTPUT .863 rpm
15496 15496	15484 15484					7000 7000	7000 7000				1725 rpm INPUT 2000 (T) OUTPUT .863 rpm
15496 15496 15496 15496	15484 15484 15484 15484					7000 7000 7000 7000	7000 7000 7000 7000				1725 rpm INPUT 3000 (D) OUTPUT .575 rpm
15496 15496	15484 15484					7000 7000	7000 7000				1725 rpm INPUT 3000 (T) OUTPUT .575 rpm
15496 15496 15496 15496	15484 15484 15484 15484					7000 7000 7000 7000	7000 7000 7000 7000				1725 rpm INPUT 3600 (D) OUTPUT .479 rpm
15496 15496	15484 15484					7000 7000	7000 7000				1725 rpm INPUT 5000 (T) OUTPUT .345 rpm
15496 15496	15484 15484					7000 7000	7000 7000				1725 rpm INPUT 7500 (T) OUTPUT .230 rpm
15496 15496	15484 15484					7000 7000	7000 7000				1725 rpm INPUT 10000 (T) OUTPUT .173 rpm
15496 15496	15484 15484					7000 7000	7000 7000				1725 rpm INPUT 20000 (T) OUTPUT .086 rpm

***Overhung Load given at one shaft diameter from housing or mounting flange.*

‡ *O.H.L. based on maximum bore. Use of smaller diameter shaft may limit O.H.L.*

5

DOUBLE AND TRIPLE REDUCTION REDUCER NO. 15

H Double Reduction Series Helical and Worm Gear
D Double Reduction Series Worm Gear
T Triple Reduction Series Worm Gear

All ratings stated are for A.G.M.A. Class 1 service.

OVERALL RATIO	INPUT SPEED R.P.M.	OUTPUT R.P.M.	RATIOS★ DOUBLE 1ST	RATIOS★ DOUBLE 2ND	RATIOS★ TRIPLE 3RD	INPUT H.P.	OUTPUT TORQUE INCH LBS.	GEARMOTOR H.P. @ 1800 / OUTPUT TORQUE INCH LBS.	HORSEPOWER TORQUE AND CBX-CTX CVX-LX INPUT O.H.L.	CBD-CVD SFD-CTD LD INPUT O.H.L.	CTT-CVT SFT INPUT O.H.L.	CBD-CTD CBX-CTX CTT OUTPUT O.H.L.
1725 rpm INPUT 30000 (T) OUTPUT .058 rpm	1800 1200 600 100	.060 .040	40	25	30 (30-1/2)	.407 .325	57483 57483	1/2 57483 *			349 349	15496 15496
1725 rpm INPUT 40000 (T) OUTPUT .043 rpm	1800 1200 600 100	.045 .030	40	25	40 (39)	.492 .389	64076 64076	1/2 64076 *			349 349	15496 15496
1725 rpm INPUT 50000 (T) OUTPUT .035 rpm	1800 1200 600 100	.036 .024	50	25	40 (39)	.445 .338	64076 64076	1/2 64076 *			349 349	15496 15496
1725 rpm INPUT 60000 (T) OUTPUT .029 rpm	1800 1200 600 100	.030 .020	40	50	30 (30-1/2)	.343 .280	57483 57483	1/3 54879			349 349	15496 15496
1725 rpm INPUT 75000 (T) OUTPUT .023 rpm	1800 1200 600 100	.024 .016	50	50	30 (30-1/2)	.312 .256	57483 57483	1/3 57483 *			349 349	15496 15496
1725 rpm INPUT 80000 (T) OUTPUT .022 rpm	1800 1200 600 100	.023 .015	40	50	40 (39)	.430 .346	64076 64076	1/2 64076 *			349 349	15496 15496
1725 rpm INPUT 90000 (T) OUTPUT .019 rpm	1800 1200 600 100	.020 .013	60	50	30 (30-1/2)	.299 .246	57483 57483	1/3 57483 *			349 349	15496 15496
1725 rpm INPUT 100000 (T) OUTPUT .017 rpm	1800 1200 600 100	.018 .012	50	50	40 (39)	.395 .316	64076 64076	1/3 41710			349 349	15496 15496
1725 rpm INPUT 150000 (T) OUTPUT .012 rpm	1800 1200 600 100	.012 .008	50	60	50 (51)	.338 .270	52354 52354	1/3 50254			349 349	15496 15496
1725 rpm INPUT 180000 (T) OUTPUT .010 rpm	1800 1200 600 100	.010 .007	60	60	50 (51)	.323 .260	52354 52354	1/3 52354 *			349 349	15496 15496

★*Numbers shown in ( ) are exact ratios.*

**Motor H.P. exceeds reducer capacity. Output must be limited to torque shown.*

D Center Distance: Primary 5.167" Secondary 9.000"
Maximum NEMA Motor Frame Size: 56C thru 256TC Flange.
T Center Distance: Primary 2.625" Secondary 5.167" Third 9.000"
Maximum NEMA Motor Frame Size: 184C - 145TC Flange.

REDUCER NO.
15

OVERHUNG LOAD RATINGS

**OVERHUNG AND THRUST LOAD-SHAFTS (INCLUDES MOTORIZED WHERE APPLICABLE)

CVX — CVD CVT		LD - LX		LD - LX		CVX-CVD-CVT		SFD-SFT-STD			OVERALL RATIO
OUTPUT O.H.L.		OUTPUT O.H.L.									
UP	DOWN	UP	DOWN	OUTPUT THRUST DOWN	OUTPUT THRUST UP	OUTPUT THRUST DOWN	OUTPUT THRUST UP	OUTPUT THRUST TOWARDS BASE	OUTPUT THRUST AWAY FROM BASE	OUTPUT O.H.L. ‡ †	
15496 15496	15484 15484					7000 7000	7000 7000				1725 rpm INPUT 30000 (T) OUTPUT .058 rpm
15496 15496	15484 15484					7000 7000	7000 7000				1725 rpm INPUT 40000 (T) OUTPUT .043 rpm
15496 15496	15484 15484					7000 7000	7000 7000				1725 rpm INPUT 50000 (T) OUTPUT .035 rpm
15496 15496	15484 15484					7000 7000	7000 7000				1725 rpm INPUT 60000 (T) OUTPUT .029 rpm
15496 15496	15484 15484					7000 7000	7000 7000				1725 rpm INPUT 75000 (T) OUTPUT .023 rpm
15496 15496	15484 15484					7000 7000	7000 7000				1725 rpm INPUT 80000 (T) OUTPUT .022 rpm
15496 15496	15484 15484					7000 7000	7000 7000				1725 rpm INPUT 90000 (T) OUTPUT .019 rpm
15496 15496	15484 15484					7000 7000	7000 7000				1725 rpm INPUT 100000 (T) OUTPUT .017 rpm
15496 15496	15484 15484					7000 7000	7000 7000				1725 rpm INPUT 150000 (T) OUTPUT .012 rpm
15496 15496	15484 15484					7000 7000	7000 7000				1725 rpm INPUT 180000 (T) OUTPUT .010 rpm

***Overhung Load given at one shaft diameter from housing or mounting flange.*

‡ O.H.L. based on maximum bore. Use of smaller diameter shaft may limit O.H.L.

5

WINSMITH

DOUBLE REDUCTION PARALLEL SHAFT WORM GEAR REDUCER

DBI Series No. 1

Center Distance: Primary 1-1/3"—Secondary 1-1/3"
All Ratings stated are for A.G.M.A. Class 1 Service

REDUCER NO. 1

HORSEPOWER AND TORQUE RATINGS

OVERHUNG LOAD RATINGS* Same Ratings apply to ALL RATIOS Input 94 lbs./Output 178 lbs.

RATIO	INPUT SPEED RPM	OUTPUT RPM	RATIO 1ST	RATIO 2ND	INPUT HP	OUTPUT TORQUE IN. LBS.
25	1800	72.00	5	5	.51	254
	1200	48.00			.38	263
	600	24.00			.22	271
	100	4.00			.06	279
50	1800	36.00	10	5	.35	267
	1200	24.00			.26	271
	600	12.00			.16	276
	100	2.00			.05	280
100	1800	18.00	10	10	.28	315
	1200	12.00			.21	320
	600	6.00			.13	325
	100	1.00			.04	329
150	1800	12.00	30	5	.22	276
	1200	8.00			.17	277
	600	4.00			.10	279
	100	.67			.04	280
200	1800	9.00	20	10	.22	322
	1200	6.00			.12	325
	600	3.00			.11	328
	100	.50			.04	330
300	1800	6.00	30	10	.19	325
	1200	4.00			.15	327
	600	2.00			.09	329
	100	.33			.03	330
400	1800	4.50	20	20	.20	353
	1200	3.00			.15	353
	600	1.50			.10	353
	100	.25			.04	353
600	1800	3.00	30	20	.17	353
	1200	2.00			.13	353
	600	1.00			.09	353
	100	.17			.03	353
900	1800	2.00	30	30	.16	334
	1200	1.33			.12	334
	600	.67			.08	334
	100	.11			.03	334
1764	1800	1.02	42	42	.14	219
	1200	.68			.11	219
	600	.34			.07	219
	100	.06			.03	219

*Overhung load ratings given at one shaft diameter from housing.

DOUBLE REDUCTION PARALLEL SHAFT WORM GEAR REDUCER

DBI Series No. 2

Center Distance: Primary 1-5/8"—Secondary 1-5/8"
All Ratings stated are for A.G.M.A. Class 1 Service

REDUCER NO. 2

HORSEPOWER AND TORQUE RATINGS

OVERHUNG LOAD RATINGS* Same Ratings apply to ALL RATIOS Input 83 lbs./Output 237 lbs.

RATIO	INPUT SPEED RPM	OUTPUT RPM	RATIO 1ST	RATIO 2ND	INPUT HP	OUTPUT TORQUE IN. LBS.
25	1800	72.00	5	5	.76	411
	1200	48.00			.55	424
	600	24.00			.31	424
	100	4.00			.08	424
50	1800	36.00	10	5	.49	424
	1200	24.00			.36	424
	600	12.00			.21	424
	100	2.00			.06	424
100	1800	18.00	10	10	.35	424
	1200	12.00			.26	424
	600	6.00			.16	424
	100	1.00			.05	424
200	1800	9.00	20	10	.26	424
	1200	6.00			.20	424
	600	3.00			.13	424
	100	.50			.04	424
300	1800	6.00	30	10	.23	424
	1200	4.00			.17	424
	600	2.00			.11	424
	100	.33			.04	424
400	1800	4.50	20	20	.22	424
	1200	3.00			.17	424
	600	1.50			.11	424
	100	.25			.04	424
600	1800	3.00	30	20	.20	424
	1200	2.00			.15	424
	600	1.00			.10	424
	100	.17			.04	424
900	1800	2.00	30	30	.18	364
	1200	1.33			.14	364
	600	.67			.09	364
	100	.11			.03	364

Overhung load ratings given at one shaft diameter from housing.

5

DOUBLE REDUCTION PARALLEL SHAFT WORM GEAR REDUCER

DBI Series No. 3

Center Distance: Primary 1-1/4"—Secondary 1-1/4"
All Ratings stated are for A.G.M.A. Class 1 Service

HORSEPOWER AND TORQUE RATINGS

OVERHUNG LOAD RATINGS* Same Ratings apply to ALL RATIOS Input 121 lbs./Output 532 lbs.

RATIO	INPUT SPEED RPM	OUTPUT RPM	RATIO 1ST	RATIO 2ND	INPUT HP	OUTPUT TORQUE IN. LBS.
36	1800	50.00	6	6	1.35	1178
	1200	33.33			1.01	1233
	600	16.67			.57	1266
	100	2.78			.14	1266
48	1800	37.50	8	6	1.10	1213
	1200	25.00			.79	1242
	600	12.50			.46	1266
	100	2.08			.11	1266
63	1800	28.57	10-1/2	6	.90	1242
	1200	19.05			.65	1266
	600	9.52			.37	1266
	100	1.59			.10	1266
72	1800	25.00	12	6	.85	1242
	1200	16.67			.62	1266
	600	8.33			.36	1266
	100	1.39			.10	1266
84	1800	21.43	10-1/2	8	.70	1176
	1200	14.29			.50	1176
	600	7.14			.29	1176
	100	1.19			.08	1176
96	1800	18.75	16	6	.70	1266
	1200	12.50			.51	1266
	600	6.25			.30	1266
	100	1.04			.08	1266
110-1/4	1800	16.33	10-1/2	10-1/2	.55	1111
	1200	10.88			.40	1111
	600	5.44			.24	1111
	100	.91			.07	1111
128	1800	14.06	16	8	.54	1176
	1200	9.38			.40	1176
	600	4.69			.24	1176
	100	.78			.07	1176
144	1800	12.50	24	6	.57	1266
	1200	8.33			.42	1266
	600	4.17			.25	1266
	100	.69			.08	1266
153-3/5	1800	10.71	32	4-4/5	.46	1176
	1200	7.14			.34	1176
	600	3.57			.20	1176
	100	.60			.06	1176
168	1800	11.71	21	8	.53	1217
	1200	7.81			.40	1226
	600	3.90			.24	1236
	100	.65			.07	1244
192	1800	9.38	32	6	.48	1266
	1200	6.25			.35	1266
	600	3.13			.22	1266
	100	.52			.07	1266
220-1/2	1800	8.16	21	10-1/2	.37	1111
	1200	5.44			.28	1111
	600	2.72			.17	1111
	100	.45			.05	1111

**Overhung load ratings given at one shaft diameter from housing.*

DOUBLE REDUCTION PARALLEL SHAFT WORM GEAR REDUCER

DBI Series No. 3

Center Distance: Primary 1-1/4"—Secondary 1-1/4"
All Ratings stated are for A.G.M.A. Class 1 Service

REDUCER NO.
3

HORSEPOWER AND TORQUE RATINGS

OVERHUNG LOAD RATINGS* Same Ratings apply to ALL RATIOS Input 121 lbs./Output 532 lbs.

RATIO	INPUT SPEED RPM	OUTPUT RPM	RATIO 1ST	RATIO 2ND	INPUT HP	OUTPUT TORQUE IN. LBS.
256	1800	7.03	32	8	.38	1176
	1200	4.69			.29	1176
	600	2.34			.18	1176
	100	.39			.06	1176
288	1800	6.25	24	12	.40	1266
	1200	4.17			.30	1266
	600	2.08			.19	1266
	100	.35			.06	1266
336	1800	5.36	42	8	.33	1176
	1200	3.57			.25	1176
	600	1.79			.15	1176
	100	.30			.05	1176
384	1800	4.69	32	12	.35	1266
	1200	3.13			.26	1266
	600	1.56			.17	1266
	100	.26			.06	1266
441	1800	4.08	21	21	.29	1111
	1200	2.72			.22	1111
	600	1.36			.14	1111
	100	.23			.05	1111
512	1800	3.52	32	16	.29	1176
	1200	2.34			.22	1176
	600	1.17			.14	1176
	100	.20			.05	1176
576	1800	3.13	24	24	.32	1266
	1200	2.08			.24	1266
	600	1.04			.16	1266
	100	.17			.06	1266
672	1800	2.68	42	16	.26	1176
	1200	1.79			.20	1176
	600	.89			.13	1176
	100	.15			.05	1176
768	1800	2.34	32	24	.28	1266
	1200	1.56			.22	1266
	600	.78			.14	1266
	100	.13			.05	1266
882	1800	2.04	42	21	.23	1111
	1200	1.36			.18	1111
	600	.68			.11	1111
	100	.11			.04	1111
1024	1800	1.76	32	32	.25	1176
	1200	1.17			.19	1176
	600	.59			.12	1176
	100	.10			.05	1176
1344	1800	1.34	42	32	.23	1176
	1200	.89			.17	1176
	600	.45			.11	1176
	100	.07			.04	1176
1764	1800	1.02	42	42	.21	1105
	1200	.68			.16	1105
	600	.34			.10	1105
	100	.06			.04	1105

**Overhung load ratings given at one shaft diameter from housing.*

5

DOUBLE REDUCTION PARALLEL SHAFT WORM GEAR REDUCER

DBI Series No. 4

Center Distance: Primary 2-5/8"—Secondary 2-5/8"
All Ratings stated are for A.G.M.A. Class 1 Service

HORSEPOWER AND TORQUE RATINGS

OVERHUNG LOAD RATINGS* Same Ratings apply to ALL RATIOS Input 177 lbs./Output 510 lbs.

RATIO	INPUT SPEED RPM	OUTPUT RPM	RATIO 1ST	RATIO 2ND	INPUT HP	OUTPUT TORQUE IN. LBS.
56-1/4	1800	32.00	7-1/2	7-1/2	1.15	1473
	1200	21.33			.82	1473
	600	10.67			.47	1473
	100	1.78			.12	1473
75	1800	24.00	10	7-1/2	.93	1473
	1200	16.00			.66	1473
	600	8.00			.39	1473
	100	1.33			.10	1473
100	1800	18.00	10	10	.75	1473
	1200	12.00			.54	1473
	600	6.00			.32	1473
	100	1.00			.09	1473
150	1800	12.00	20	7-1/2	.59	1473
	1200	8.00			.43	1473
	600	4.00			.26	1473
	100	.67			.08	1473
200	1800	9.00	20	10	.50	1473
	1200	6.00			.37	1473
	600	3.00			.22	1473
	100	.50			.07	1473
225	1800	8.00	15	15	.49	1473
	1200	5.33			.37	1473
	600	2.67			.23	1473
	100	.44			.07	1473
300	1800	6.00	20	15	.42	1473
	1200	4.00			.32	1473
	600	2.00			.20	1473
	100	.33			.06	1473
400	1800	4.50	20	20	.37	1473
	1200	3.00			.28	1473
	600	1.50			.18	1473
	100	.25			.06	1473
450	1800	4.00	30	15	.36	1473
	1200	2.67			.28	1473
	600	1.33			.18	1473
	100	.22			.06	1473
500	1800	3.60	50	10	.32	1473
	1200	2.40			.25	1473
	600	1.20			.16	1473
	100	.20			.05	1473

**Overhung load ratings given at one shaft diameter from housing.*

DOUBLE REDUCTION PARALLEL SHAFT WORM GEAR REDUCER

DBI Series No. 4

Center Distance: Primary 2-5/8"—Secondary 2-5/8"
All Ratings stated are for A.G.M.A. Class 1 Service

REDUCER NO. 4

HORSEPOWER AND TORQUE RATINGS

OVERHUNG LOAD RATINGS* Same Ratings apply to ALL RATIOS Input 177 lbs./Output 510 lbs.

RATIO	INPUT SPEED RPM	OUTPUT RPM	RATIO 1ST	RATIO 2ND	INPUT HP	OUTPUT TORQUE IN. LBS.
600	1800	3.00	20	30	.34	1473
	1200	2.00			.26	1473
	600	1.00			.17	1473
	100	.17			.06	1473
750	1800	2.40	50	15	.29	1473
	1200	1.60			.22	1473
	600	.80			.15	1473
	100	.13			.05	1473
800	1800	2.25	40	20	.29	1473
	1200	1.50			.22	1473
	600	.75			.15	1473
	100	.13			.05	1473
900	1800	2.00	30	30	.30	1473
	1200	1.33			.23	1473
	600	.67			.15	1473
	100	.11			.05	1473
1000	1800	1.80	50	20	.26	1473
	1200	1.20			.20	1473
	600	.60			.13	1473
	100	.10			.05	1473
1200	1800	1.50	40	30	.27	1473
	1200	1.00			.21	1473
	600	.50			.14	1473
	100	.08			.05	1473
1500	1800	1.20	50	30	.25	1473
	1200	.80			.20	1473
	600	.40			.13	1473
	100	.07			.05	1473
1600	1800	1.13	40	40	.25	1473
	1200	.75			.20	1473
	600	.38			.13	1473
	100	.06			.05	1473
2000	1800	.90	50	40	.23	1473
	1200	.60			.18	1473
	600	.30			.12	1473
	100	.05			.05	1473
2500	1800	.72	50	50	.22	1380
	1200	.48			.17	1380
	600	.24			.12	1380
	100	.04			.04	1380

*Overhung load ratings given at one shaft diameter from housing.

5

DOUBLE REDUCTION PARALLEL SHAFT WORM GEAR REDUCER

DBI Series No. 4½

Center Distance: Primary 2-5/8"—Secondary 3"
All Ratings stated are for A.G.M.A. Class 1 Service

HORSEPOWER AND TORQUE RATINGS

OVERHUNG LOAD RATINGS* Same Ratings apply to ALL RATIOS Input 199 lbs./Output 885 lbs.

RATIO	INPUT SPEED RPM	OUTPUT RPM	RATIO 1ST	RATIO 2ND	INPUT HP	OUTPUT TORQUE IN. LBS.
60	1800	30.00	10	6	1.91	2780
	1200	20.00			1.34	2780
	600	10.00			.75	2780
	100	1.67			.18	2780
90	1800	20.00	10	9	1.18	2360
	1200	13.33			.84	2360
	600	6.67			.48	2360
	100	1.11			.12	2360
120	1800	15.00	20	6	1.14	2780
	1200	10.00			.82	2780
	600	5.00			.47	2780
	100	.83			.13	2780
180	1800	10.00	20	9	.74	2360
	1200	6.67			.54	2360
	600	3.33			.32	2360
	100	.56			.09	2360
240	1800	7.50	20	12	.74	2780
	1200	5.00			.55	2780
	600	2.50			.33	2780
	100	.42			.10	2780
270	1800	6.67	30	9	.60	2360
	1200	4.44			.45	2360
	600	2.22			.27	2360
	100	.37			.08	2360
360	1800	5.00	30	12	.61	2780
	1200	3.33			.46	2780
	600	1.67			.29	2780
	100	.28			.09	2780
450	1800	4.00	50	9	.44	2360
	1200	2.67			.33	2360
	600	1.33			.21	2360
	100	.22			.07	2360
480	1800	3.75	40	12	.52	2780
	1200	2.50			.39	2780
	600	1.25			.25	2780
	100	.21			.08	2780
540	1800	3.33	30	18	.43	2356
	1200	2.22			.33	2356
	600	1.11			.21	2356
	100	.19			.07	2356

*Overhung load ratings given at one shaft diameter from housing.

DOUBLE REDUCTION PARALLEL SHAFT WORM GEAR REDUCER

DBI Series No. 4½

Center Distance: Primary 2-5/8"—Secondary 3"
All Ratings stated are for A.G.M.A. Class 1 Service

REDUCER NO. 4½

HORSEPOWER AND TORQUE RATINGS

OVERHUNG LOAD RATINGS* Same Ratings apply to ALL RATIOS Input 199 lbs./Output 885 lbs.

RATIO	INPUT SPEED RPM	OUTPUT RPM	RATIO 1ST	RATIO 2ND	INPUT HP	OUTPUT TORQUE IN. LBS.
600	1800	3.00	50	12	.45	2780
	1200	2.00			.35	2780
	600	1.00			.22	2780
	100	.17			.07	2780
720	1800	2.50	30	24	.46	2780
	1200	1.67			.36	2780
	600	.83			.23	2780
	100	.14			.08	2780
900	1800	2.00	50	18	.34	2356
	1200	1.33			.26	2356
	600	.67			.17	2356
	100	.11			.06	2356
960	1800	1.88	40	24	.41	2780
	1200	1.25			.31	2780
	600	.63			.20	2780
	100	.10			.07	2780
1200	1800	1.50	50	24	.36	2780
	1200	1.00			.28	2780
	600	.50			.19	2780
	100	.08			.07	2780
1440	1800	1.25	40	36	.32	2441
	1200	.83			.25	2441
	600	.42			.16	2441
	100	.07			.06	2441
1800	1800	1.00	50	36	.29	2441
	1200	.67			.23	2441
	600	.33			.15	2441
	100	.06			.06	2441
2350	1800	.77	50	47	.25	1955
	1200	.51			.20	1955
	600	.26			.13	1955
	100	.04			.05	1955
3000	1800	.60	50	60	.21	1331
	1200	.40			.17	1331
	600	.20			.11	1331
	100	.03			.04	1331

*Overhung load ratings given at one shaft diameter from housing.

5

WINSMITH

DOUBLE REDUCTION PARALLEL SHAFT WORM GEAR REDUCER

DBI Series No. 5

Center Distance: Primary 2-5/8"—Secondary 3-1/2"
All Ratings stated are for A.G.M.A. Class 1 Service

HORSEPOWER AND TORQUE RATINGS

OVERHUNG LOAD RATINGS* Same Ratings apply to ALL RATIOS Input 199 lbs./Output 1420 lbs.

RATIO	INPUT SPEED RPM	OUTPUT RPM	RATIO 1ST	RATIO 2ND	INPUT HP	OUTPUT TORQUE IN. LBS.
56-1/4	1800	32.00	7-1/2	7-1/2	2.77	3966
	1200	21.33			1.94	3966
	600	10.67			1.07	3966
	100	1.78			.25	3966
75	1800	24.00	10	7-1/2	2.17	3966
	1200	16.00			1.53	3966
	600	8.00			.85	3966
	100	1.33			.20	3966
112-1/2	1800	16.00	15	7-1/2	1.62	3966
	1200	10.67			1.15	3966
	600	5.33			.66	3966
	100	.89			.17	3966
150	1800	12.00	20	7-1/2	1.29	3966
	1200	8.00			.93	3966
	600	4.00			.54	3966
	100	.67			.14	3966
165	1800	10.91	15	11	1.08	3515
	1200	7.27			.78	3560
	600	3.64			.46	3560
	100	.61			.12	3560
225	1800	8.00	15	15	1.02	3966
	1200	5.33			.74	3966
	600	2.67			.44	3966
	100	.44			.13	3966
300	1800	6.00	40	7-1/2	.84	3966
	1200	4.00			.62	3966
	600	2.00			.38	3966
	100	.33			.11	3966
330	1800	5.45	15	22	.72	3515
	1200	3.64			.53	3560
	600	1.82			.32	3560
	100	.30			.10	3560
375	1800	4.80	50	7-1/2	.72	3966
	1200	3.20			.53	3966
	600	1.60			.33	3966
	100	.27			.10	3966
450	1800	4.00	30	15	.69	3966
	1200	2.67			.51	3966
	600	1.33			.32	3966
	100	.22			.10	3966
550	1800	3.27	50	11	.52	3560
	1200	2.18			.39	3560
	600	1.09			.24	3560
	100	0.18			.08	3560
600	1800	3.00	40	15	.58	3966
	1200	2.00			.44	3966
	600	1.00			.28	3966
	100	0.17			.09	3966

**Overhung load ratings given at one shaft diameter from housing.*

DOUBLE REDUCTION PARALLEL SHAFT WORM GEAR REDUCER

DBI Series No. 5

Center Distance: Primary 2-5/8"—Secondary 3-1/2"
All Ratings stated are for A.G.M.A. Class 1 Service

REDUCER NO. 5

HORSEPOWER AND TORQUE RATINGS

OVERHUNG LOAD RATINGS* Same Ratings apply to ALL RATIOS Input 199 lbs./Output 1420 lbs.

RATIO	INPUT SPEED RPM	OUTPUT RPM	RATIO 1ST	RATIO 2ND	INPUT HP	OUTPUT TORQUE IN. LBS.
660	1800	2.73	30	22	.51	3560
	1200	1.82			.38	3560
	600	.91			.24	3560
	100	.15			.08	3560
750	1800	2.40	50	15	.50	3966
	1200	1.60			.38	3966
	600	.80			.24	3966
	100	.13			.08	3966
880	1800	2.05	40	22	.44	3560
	1200	1.36			.33	3560
	600	.68			.21	3560
	100	.11			.07	3560
900	1800	2.00	30	30	.52	3966
	1200	1.33			.40	3966
	600	.67			.26	3966
	100	.11			.09	3966
1100	1800	1.64	50	22	.39	3566
	1200	1.09			.30	3560
	600	.55			.19	3560
	100	.09			.07	3560
1200	1800	1.50	40	30	.45	3966
	1200	1.00			.35	3966
	600	.50			.23	3966
	100	.08			.08	3966
1320	1800	1.36	30	44	.40	3560
	1200	.91			.31	3560
	600	.45			.21	3560
	100	.08			.07	3560
1500	1800	1.20	50	30	.40	3966
	1200	.80			.31	3966
	600	.40			.20	3966
	100	.07			.07	3966
1800	1800	1.00	30	60	.37	2850
	1200	.67			.29	2850
	600	.33			.19	2850
	100	.06			.07	2850
2200	1800	.82	50	44	.32	3560
	1200	.55			.25	3560
	600	.27			.17	3560
	100	.05			.06	3560
3000	1800	.60	50	60	.30	2850
	1200	.40			.24	2850
	600	.20			.16	2850
	100	.03			.06	2850

Overhung load ratings given at one shaft diameter from housing.

DOUBLE REDUCTION PARALLEL SHAFT WORM GEAR REDUCER

DBI Series No. 6

Center Distance: Primary 3-1/2"—Secondary 5.167"
All Ratings stated are for A.G.M.A. Class 1 Service

HORSEPOWER AND TORQUE RATINGS

OVERHUNG LOAD RATINGS* See page B-235

RATIO	INPUT SPEED RPM	OUTPUT RPM	RATIO 1ST	RATIO 2ND	INPUT HP	OUTPUT TORQUE IN. LBS.
54-3/8	1800	33.10	7-1/2	7-1/4	6.58	9,679
	1200	22.07			5.32	11,388
	600	11.03			2.88	11,388
	100	1.84			.63	11,388
79-3/4	1800	22.57	11	7-1/4	5.15	10,727
	1200	15.05			3.79	11,388
	600	7.52			2.08	11,388
	100	1.25			.47	11,388
93-3/4	1800	19.20	7-1/2	12-1/2	4.29	10,339
	1200	12.80			3.00	10,339
	600	6.40			1.66	10,339
	100	1.07			.38	10,339
108-3/4	1800	16.55	15	7-1/4	4.05	10,601
	1200	11.03			3.05	11,388
	600	5.52			1.70	11,388
	100	.92			.42	11,388
137-1/2	1800	13.09	11	12-1/2	3.09	10,339
	1200	8.73			2.17	10,339
	600	4.36			1.22	10,339
	100	.73			.29	10,339
159-1/2	1800	11.29	22	7-1/4	3.02	10,932
	1200	7.52			2.22	11,388
	600	3.76			1.25	11,388
	100	.63			.32	11,388
187-1/2	1800	9.60	15	12-1/2	2.48	10,399
	1200	6.40			1.77	10,339
	600	3.20			1.01	10,339
	100	.53			.26	10,339
217-1/2	1800	8.28	30	7-1/4	2.36	9,474
	1200	5.52			1.89	11,388
	600	2.76			1.10	11,388
	100	.46			.31	11,388
275	1800	6.55	22	12-1/2	1.83	10,339
	1200	4.36			1.31	10,339
	600	2.18			.76	10,339
	100	.36			.21	10,339
319	1800	5.64	44	7-1/4	1.70	9,736
	1200	3.76			1.41	11,388
	600	1.88			.83	11,388
	100	.31			.25	11,388
435	1800	4.14	30	14-1/2	1.64	11,388
	1200	2.76			1.21	11,388
	600	1.38			.73	11,388
	100	.23			.23	11,388
500	1800	3.60	30	16-2/3	1.32	10,567
	1200	2.40			.97	10,567
	600	1.20			.59	10,567
	100	.20			.18	10,567

Overhung load ratings given at one shaft diameter from housing.

OVERHUNG LOAD RATINGS*

Same Ratings apply to ALL RATIOS Input 332 lbs./Output 3620 lbs.
EXCEPT:
Ratio 54-3/8 Input 332 lbs./Output 3030 lbs. Ratio 79-3/4 Input 332 lbs./Output 3450 lbs.

All Ratings stated are for A.G.M.A. Class 1 Service

REDUCER NO. 6

HORSEPOWER AND TORQUE RATINGS

RATIO	INPUT SPEED RPM	OUTPUT RPM	RATIO 1ST	RATIO 2ND	INPUT HP	OUTPUT TORQUE IN. LBS.
550	1800	3.27	22	25	1.21	10,557
	1200	2.18			.89	10,557
	600	1.09			.54	10,557
	100	.18			.16	10,557
638	1800	2.82	44	14-1/2	1.25	11,388
	1200	1.88			.93	11,388
	600	.94			.57	11,388
	100	.16			.19	11,388
750	1800	2.40	30	25	1.05	10,557
	1200	1.60			.78	10,557
	600	.80			.49	10,557
	100	.13			.16	10,557
870	1800	2.07	30	29	1.16	11,388
	1200	1.38			.87	11,388
	600	.69			.55	11,388
	100	.11			.19	11,388
1100	1800	1.64	44	25	.83	10,557
	1200	1.09			.62	10,557
	600	.55			.39	10,557
	100	.09			.13	10,557
1276	1800	1.41	44	29	.91	11,388
	1200	.94			.69	11,388
	600	.47			.45	11,388
	100	.08			.16	11,388
1500	1800	1.20	30	50	.74	9,439
	1200	.80			.56	9,439
	600	.40			.36	9,439
	100	.07			.13	9,439
1740	1800	1.03	60	29	.85	11,388
	1200	.69			.66	11,388
	600	.34			.44	11,388
	100	.06			.17	11,388
2233	1800	.81	77	29	.71	10,958
	1200	.54			.55	10,958
	600	.27			.37	10,958
	100	.04			.14	10,958
2460	1800	.73	60	41	.63	9,909
	1200	.49			.49	9,909
	600	.24			.33	9,909
	100	.04			.13	9,909
3157	1800	.57	77	41	.55	9,909
	1200	.38			.43	9,909
	600	.19			.29	9,909
	100	.03			.11	9,909
3850	1800	.47	77	50	.50	9,439
	1200	.31			.39	9,439
	600	.16			.27	9,439
	100	.03			.11	9,439

**Overhung load ratings given at one shaft diameter from housing.*

5

DOUBLE REDUCTION PARALLEL SHAFT WORM GEAR REDUCER

DBI Series No. 8

Center Distance: Primary 3-1/2"—Secondary 6-1/2"
All Ratings stated are for A.G.M.A. Class 1 Service

HORSEPOWER AND TORQUE RATINGS

OVERHUNG LOAD RATINGS* See page B-237

RATIO	INPUT SPEED RPM	OUTPUT RPM	RATIO 1ST	RATIO 2ND	INPUT HP	OUTPUT TORQUE IN. LBS.
52-1/2	1800	34.29	7-1/2	7	6.58	9,375
	1200	22.86			5.45	11,344
	600	11.43			4.01	15,842
	100	1.90			1.02	19,056
75	1800	24.00	7-1/2	10	6.58	13,124
	1200	16.00			5.45	15,836
	600	8.00			3.70	20,169
	100	1.33			.81	20,169
110	1800	16.36	11	10	5.15	14,514
	1200	10.91			4.34	17,812
	600	5.45			2.46	18,498
	100	.91			.56	18,498
150	1800	12.00	15	10	4.05	14,289
	1200	8.00			3.40	17,307
	600	4.00			2.20	20,169
	100	.67			.52	20,169
225	1800	8.00	7-1/2	30	4.51	21,476
	1200	5.33			3.23	21,476
	600	2.67			1.86	21,476
	100	.44			.47	21,476
300	1800	6.00	30	10	2.36	13,511
	1200	4.00			2.01	16,420
	600	2.00			1.40	20,169
	100	.33			.38	20,169
330	1800	5.45	11	30	3.31	21,476
	1200	3.64			2.39	21,476
	600	1.82			1.39	21,476
	100	.30			.36	21,476
337-1/2	1800	5.33	7-1/2	45	3.22	20,990
	1200	3.56			2.33	20,990
	600	1.78			1.37	20,990
	100	.30			.36	20,990
450	1800	4.00	15	30	2.71	21,476
	1200	2.67			1.98	21,476
	600	1.33			1.17	21,476
	100	.22			.33	21,476
495	1800	3.64	11	45	2.40	20,990
	1200	2.42			1.75	20,990
	600	1.21			1.04	20,990
	100	.20			.28	20,990
600	1800	3.00	30	20	2.09	20,169
	1200	2.00			1.53	20,169
	600	1.00			.93	20,169
	100	.17			.28	20,169
660	1800	2.73	22	30	2.04	21,476
	1200	1.82			1.49	21,476
	600	.91			.90	21,476
	100	.15			.26	21,476

**Overhung load ratings given at one shaft diameter from housing.*

OVERHUNG LOAD RATINGS*

Same Ratings apply to Input 332 lbs./Output 4520 lbs.
EXCEPT:
Ratio 52-1/2 Input 270 lbs./Output 4290 lbs.

All Ratings stated are for A.G.M.A. Class 1 Service

REDUCER NO. 8

HORSEPOWER AND TORQUE RATINGS

RATIO	INPUT SPEED RPM	OUTPUT RPM	RATIO 1ST	RATIO 2ND	INPUT HP	OUTPUT TORQUE IN. LBS.
705	1800	2.55	15	47	2.01	18,543
	1200	1.70			1.50	18,543
	600	.85			.92	18,543
	100	.14			.28	18,543
900	1800	2.00	30	30	1.76	21,476
	1200	1.33			1.31	21,476
	600	.67			.81	21,476
	100	.11			.26	21,476
990	1800	1.82	22	45	1.52	20,990
	1200	1.21			1.12	20,990
	600	.61			.69	20,990
	100	.10			.21	20,990
1200	1800	1.50	30	40	1.47	20,169
	1200	1.00			1.10	20,169
	600	.50			.70	20,169
	100	.08			.23	20,169
1320	1800	1.36	44	30	1.35	21,476
	1200	.91			1.01	21,476
	600	.45			.63	21,476
	100	.08			.21	21,476
1410	1800	1.28	30	47	1.37	18,543
	1200	.85			1.03	18,543
	600	.43			.67	18,543
	100	.07			.23	18,543
1800	1800	1.00	60	30	1.30	19,033
	1200	.67			.88	19,033
	600	.33			.57	19,033
	100	.06			.21	19,033
1980	1800	.91	44	45	1.03	20,990
	1200	.61			.79	20,990
	600	.30			.50	20,990
	100	.05			.17	20,990
2400	1800	.75	60	40	1.07	20,169
	1200	.50			.83	20,169
	600	.25			.54	20,169
	100	.04			.20	20,169
2700	1800	.67	60	45	.97	20,990
	1200	.44			.75	20,990
	600	.22			.49	20,990
	100	.04			.18	20,990
2820	1800	.64	60	47	1.01	18,543
	1200	.43			.79	18,543
	600	.22			.52	18,543
	100	.04			.20	18,543

**Overhung load ratings given at one shaft diameter from housing.*

5

DOUBLE REDUCTION PARALLEL SHAFT WORM GEAR REDUCER

DBI Series No. 9

Center Distance: Primary 5.1666"—Secondary 8-1/8"
All Ratings stated are for A.G.M.A. Class 1 Service

HORSEPOWER AND TORQUE RATINGS

OVERHUNG LOAD RATINGS* See page B-239

RATIO	INPUT SPEED RPM	OUTPUT RPM	RATIO 1ST	RATIO 2ND	INPUT HP	OUTPUT TORQUE IN. LBS.
118-3/4	1800	15.16	12-1/2	9-1/2	11.02	34,332
	1200	10.11			9.09	41,410
	600	5.05			5.04	42,459
	100	.84			1.11	42,459
158-1/3	1800	11.37	16-2/3	9-1/2	8.83	34,854
	1200	7.58			7.31	42,100
	600	3.79			4.03	42,459
	100	.63			.92	42,459
237-1/2	1800	7.58	25	9-1/2	6.35	34,166
	1200	5.05			5.28	41,371
	600	2.53			3.00	42,459
	100	.42			.73	42,459
323	1800	5.57	34	9-1/2	4.93	32,756
	1200	3.72			4.10	39,574
	600	1.86			2.46	42,459
	100	.31			.63	42,459
475	1800	3.79	25	19	4.69	42,459
	1200	2.53			3.35	42,459
	600	1.26			1.93	42,459
	100	.21			.51	42,459
570	1800	3.16	60	9-1/2	2.86	26,450
	1200	2.11			2.40	32,466
	600	1.05			1.49	35,119
	100	.18			.47	41,047
646	1800	2.79	34	19	3.84	42,459
	1200	1.86			2.77	42,459
	600	.93			1.61	42,459
	100	.15			.45	42,459
779	1800	2.31	41	19	3.46	42,459
	1200	1.54			2.51	42,459
	600	.77			1.48	42,459
	100	.13			.43	42,459
867	1800	2.08	34	25-1/2	2.71	33,086
	1200	1.38			1.98	33,086
	600	.69			1.17	33,086
	100	.12			.34	33,086

*Overhung load ratings given at one shaft diameter from housing.

OVERHUNG LOAD RATINGS*

Same Ratings apply to Input 332 lbs./Output 5880 lbs.
EXCEPT:
Ratio 118-3/4 & 158-1/3 Input 180 lbs./Output 5880 lbs.
All Ratings stated are for A.G.M.A. Class 1 Service

REDUCER NO. 9

HORSEPOWER AND TORQUE RATINGS

RATIO	INPUT SPEED RPM	OUTPUT RPM	RATIO 1ST	RATIO 2ND	INPUT HP	OUTPUT TORQUE IN. LBS.
950	1800	1.89	25	38	3.21	42,459
	1200	1.26			2.35	42,459
	600	.63			1.40	42,459
	100	.11			.41	42,459
1275	1800	1.41	25	51	2.39	33,086
	1200	.94			1.77	33,086
	600	.47			1.07	33,086
	100	.08			.33	33,086
1558	1800	1.16	41	38	2.47	42,459
	1200	.77			1.83	42,459
	600	.39			1.12	42,459
	100	.06			.35	42,459
1734	1800	1.04	34	51	2.05	33,086
	1200	.69			1.52	33,086
	600	.35			.94	33,086
	100	.06			.29	33,086
1900	1800	.95	50	38	2.22	42,459
	1200	.63			1.64	42,459
	600	.32			1.01	42,459
	100	.05			.33	42,459
2280	1800	.79	60	38	2.01	42,459
	1200	.53			1.49	42,459
	600	.26			.92	42,459
	100	.04			.30	42,459
2550	1800	.71	50	51	1.73	33,086
	1200	.47			1.29	33,086
	600	.24			.80	33,086
	100	.04			.27	33,086
3060	1800	.59	60	51	1.58	33,086
	1200	.39			1.18	33,086
	600	.20			.74	33,086
	100	.03			.25	33,086

**Overhung load ratings given at one shaft diameter from housing.*

5

INDEX TO ENGINEERING DATA

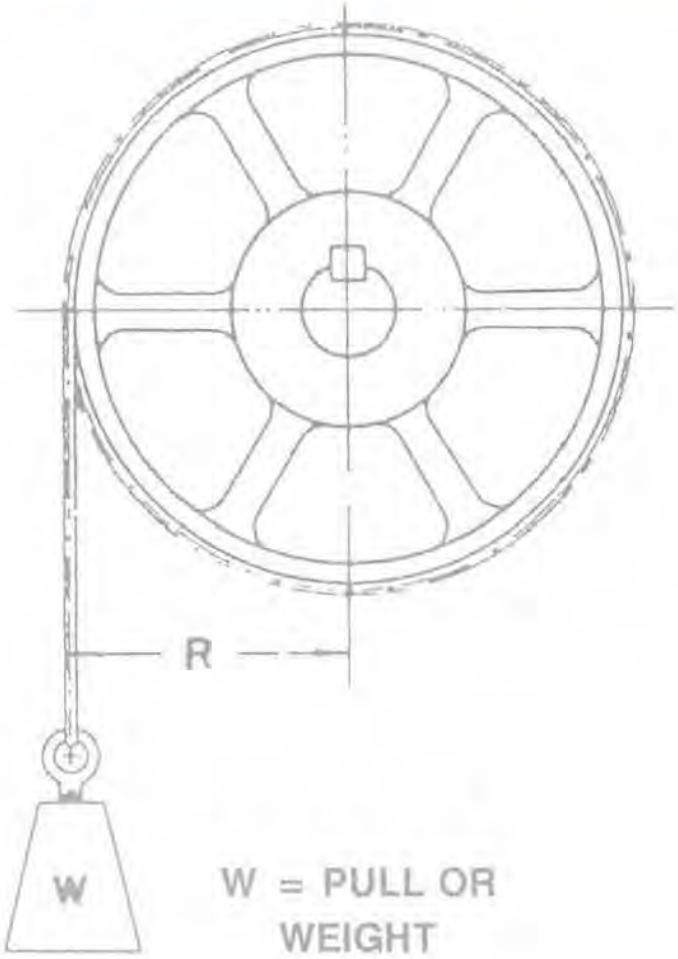

PAGE NO.

Torque 241
Classification of Load 244
AGMA Service Factors 247
Efficiency 248
Self Locking Speed Reducers 248
Overhung Load 248
Use of Outboard Bearing 249
Hollow Shaft Reducers 250
Miscellaneous Electrical Formulas 252
Terminal Markings and Connections 252
Application Data Checklist for Selecting Speed Reducers
and Gearmotors 253

Speed Reducer Selection

You can easily select the right speed reducer for almost all applications by using the data and examples shown on the following pages.

TORQUE

DEFINITION OF TORQUE

That which produces or tends to produce rotary motion in a body.

Torque = W × R, or the load, force, push or pull mutiplied by the radius thru which such load, force, push or pull acts. W = Pull in pounds. R = Radius from center, in inches.

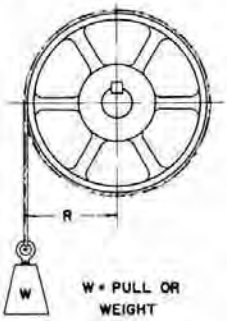

Figure 1

The resulting product of these two factors, **force or load,** and **distance** is the twisting or torsional load, more commonly expressed as **"torque load"** usually in "inch pounds," sometimes "foot pounds," occasionally, "inch ounces." Winsmith reducer ratings are given in inch pounds. When torque is expressed in foot-pounds or inch-ounces, they may be converted thus:

Foot-pounds × 12 = inch-pounds
Inch-ounces ÷ 16 = inch-pounds

Torque has nothing to do with distance traveled, with speed, nor with time.

Suppose we wrap a belt or a rope around the rim of a pulley, then fasten one end to the pulley and let the other end hang as shown in Figure 1. It is assumed that the pulley is keyed or set-screwed to a shaft properly supported in bearings.

On the loose end of the belt or rope, place light weights until the pulley and shaft start to revolve. Let us say that the pulley is 16" diameter and it takes weights totalling five pounds to start the pulley in motion.

Since Torque = W × R, then W (pull, or hung weights in this case) totalling five pounds multiplied by R (radius of pulley) 16/2 or 8" = 40 inch pounds= the torque required to overcome bearing friction and produce rotary motion of the pulley.

Now, let us suppose that the same size pulley, 16" diameter is mounted on the driving shaft of some light machine, driven from a line or countershaft. We will assume that the belt pull required to operate the machine is 200 pounds, including of course the pull necessary to overcome friction. Therefore,

Total Torque Load (W × R) = 200 × 16/2 or 1600 inch pounds. Since $HP = \frac{t \times N}{63025}$ (see section below) then the horsepower required to drive the machine if the 16" pulley turns at 118 R.P.M. = $\frac{1600 \times 118}{63025}$ = approximately 3 HP.

MOTOR TORQUE

Electric Motors, like Speed Reducers, have a "Torque Capacity" as well as a horsepower rating.

A one (1) HP 1800 R.P.M. Standard Motor has a torque capacity of:

$t = \frac{63{,}025 \times 1}{1800}$ or approximately 35 inch-pounds at full load speed of 1800 R.P.M.

With this in mind, it is readily seen, that when a Horsepower-Torque Table is not available, the torque capacity of any standard motor can be readily determined. If 35 inch pounds is the capacity of a 1 HP 1800 RPM motor, 350 inch pounds would be that of a 10 HP 1800 RPM motor (10 × 35)—17.5 inch pounds that of a ½ HP 1800 RPM motor (½ of 35), etc.

It is also seen from $t = \frac{63{,}025 \times HP}{N}$ that as speed is increased, torque decreases and as speed is decreased, torque increases, provided horsepower remains constant.

EXAMPLES

A 1 HP 1200 RPM motor (1160 RPM full load) has a torque capacity of

$t = \frac{63{,}025 \times 1}{1160}$ = 54 inch pounds approximately.

A 1 HP 600 RPM motor would thus have a torque capacity of about 105 inch pounds, and so on.

LOW SPEEDS INVOLVING LARGE RATIOS OF REDUCTION

This leads to consideration of Torque Problems, involving low input speeds, and large ratios of reduction, so often encountered in conveyor drive design, in drives for automatic heat-treating furnaces, traveling ovens (baking, enamel and paint drying) glass Lehrs, agitators; in fact wherever and whenever the driven machine, conveyor, or equipment must travel at low speeds.

Horsepower figures are misleading at low input-speeds of Speed Reducers. When the input speed is 100 RPM or less, Torque Capacity of the Speed Reducer should be the guide in selecting a unit of proper size.

TORQUE CONTROL

With large reduction and slow speed shaft going very slow it is very easy to overpower the reducer when the available horsepower is more than twice the rated input horsepower for helical gear reducers, or more than three times for worm gear reducers. It is advisable to control the torque that may be imposed upon the reducer. Shear pin couplings, sprockets or gears are quite commonly used for this purpose.

The shear pin coupling must have a capacity sufficient to withstand the starting capacity of the reducer. Therefore, with a shear pin coupling it is possible to continuously overload a reducer and thus decrease the life of the reducer. A shear pin coupling is an excellent safety device for heavy overloads. To overcome the difficulty of replacing broken shear pins, an overload clutch may be installed which can be easily reset.

The slip clutch or fluid drive ordinarily may be used to lighten starting loads, as well as to protect the reducer against overload. When heavy starting loads are present, one of these clutches makes it possible to use a motor with less capacity.

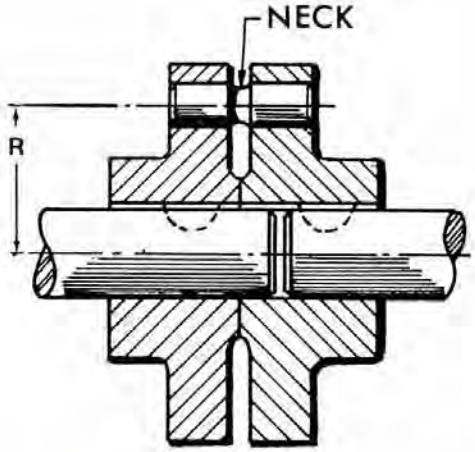

SHEAR PIN COUPLINGS OR HUBS

The shear pin is generally necked at the place breakage is desired. It may be made of almost any material such as cast iron, steel, drill rod, aluminum, brass or wood. The shear pin may be used radially or axially. It should fit into hardened steel bushings, such as drill jig bushings so that shearing may not destroy the flange parts of the coupling or hub. Lubrication should also be provided with shear pin couplings or hubs so that when the shear pin fails the revolving parts may be protected from those that remain stationary.

A Bulletin entitled "Shear Pin Couplings or Hubs" will be sent by the Winsmith Engineering Department upon request.

The following table gives the torque carrying capacity of shear pins. It is based upon the following formula

$$T = ARS_sN = 0.7854D^2S_sNR \text{ when}$$

T = Allowable torque in inch pounds

R = Radius from center of shaft to center of pin in inches

A = Area at notch of shear pin in square inches

D = Diameter at notch of shear pin in inches

N = Number of pins in shear. The tables are given for 1 pin

S_s = Shearing stress of shear pins in pounds per square inch

Steel Pins SAE 1113 (Ultimate shear stress 62,000 psi.) Allowable torque on one pin in inch-pounds.								
	Diameter of Pin in Inches at Neck							
R	1/8	3/16	1/4	5/16	3/8	7/16	1/2	5/8
1/2"	380	428	1522	2378				
1"	761	1712	3034	4755	6848	9320		
1 1/4"	951	2140	3804	5944	8560	11,651	15,117	
1 1/2"	1141	2568	4565	7133	10,272	13,980	18,160	41,086
1 3/4"	1331	2995	5326	8322	11,983	16,311	21,204	33,287
2"	1522	3424	6087	9511	13,695	18,641	24,347	38,043
2 1/4"	1712	3852	6848	10,700	15,407	20,971	27,391	42,798
2 1/2"	1902	4280	7609	11,888	17,119	23,301	30,434	47,553
3"	2283	5136	9130	14,266	20,543	27,961	36,521	57,064
3 1/2"	2663	5992	10,652	16,644	23,967	32,622	42,608	66,574
4"	3043	6848	12,174	19,021	27,391	37,282	48,695	76,085
5"	3804	8560	15,117	23,777	34,238	46,602	60,868	95,107
6"	4565	10,272	18,160	28,532	41,086	55,923	73,042	114,128
7"	5326	11,983	21,204	33,287	47,934	65,243	85,216	133,150
8"	6087	13,695	24,347	38,043	54,782	74,564	97,389	152,171
9"	6848	15,407	27,391	42,798	61,629	83,884	109,563	171,192
10"	7609	17,119	30,434	47,553	68,477	93,205	121,737	190,214

EXAMPLE

Determine the size of shear pin to withstand a starting load of 40,000 inch pounds

FROM THE TABLE THERE ARE MANY CHOICES

1 1/2" pin @ 3 1/2" radius with an SAE 1113 steel pin gives a torque of 42,608 inch pounds.

2 A 3/8" pin @ 6" gives 41,086 inch pounds of torque.

3 A 5/16" pin @ 9" gives 42,798 inch pounds of torque.

4 If two pins are used, each will withstand 20,000 inch pounds of torque, a 7/16" pin or SAE 1113 steel at 2 1/4" will withstand 20,971 inch pounds of torque.

HORSEPOWER AND TORQUE

One (1) Horsepower (H.P.) — 33,000 foot pounds of work done in one (1) minute.

Note that three (3) factors are involved:

Distance — Foot
Load, Force — (Push or Pull) — Pounds
Time — One (1) Minute

Putting it another way, one (1) HP is equivalent to raising 33,000 pounds, one foot in one minute.

Any amount of horsepower can be determined by the following formula:

$$\text{H.P.} = \frac{\text{L (Load in pounds) x Feet per minute}}{33{,}000}$$

To determine the relationship between horsepower and torque

let HP = Horsepower
T = Torque, in foot-pounds
t = Torque, in inch-pounds
N = R. P. M. (Revolutions per minute)

then, one (1) HP = A Torque Load (Twisting force) of 63,025 inch pounds, turning 1 revolution in 1 minute.

therefore,

$$HP = \frac{t \times N}{63{,}025} \text{ or } \frac{T \times N}{5250}\ ;\ t = \frac{63{,}025 \times HP}{N}\ ;\ T = \frac{5250 \times HP}{N}$$

HORSEPOWER–TORQUE TABLE

One (1) Horsepower (at 1800 R.P.M.) = 35 Inch Pounds One (1) Horsepower = 746 Watts One (1) Kilowatt (KW) = 1000 Watts = 1.34 H.P.

R.P.M.	1 10 H.P.	⅛ H.P.	1/6 H.P.	¼ H.P.	⅓ H.P.	½ H.P.	¾ H.P.	1 H.P.	1½ H.P.	2 H.P.	3 H.P.	5 H.P.
1	63.025	78.781	105,041	157,563	210,083	315,125	472,688	630,254	945,375	1,260,508	1,890,762	3,151,270
2	31,512	39,391	52,521	78,782	105,042	157,563	236,344	315,125	472,688	630,254	945,381	1,575,635
4	15,756	19,695	26,260	39,391	52,521	78,782	118,172	157,563	236,344	315,127	472,690	787,817
6	10,504	13,130	17,507	26,261	35,014	52,521	78,782	105,041	157,563	210,083	315,125	525,212
8	7,878	9,848	13,130	19,695	26,261	39,391	59,086	78,782	118,172	157,563	236,344	393,908
1.0	6,303	7,878	10,504	15,756	21,008	31,512	47,268	63,025	94,538	126,051	189,076	315,127
2	3,151	3,939	5,252	7,878	10,504	15,756	23,634	31,512	47,269	63,025	94,538	157,564
4	1,576	1,970	2,626	3,939	5,252	7,878	11,817	15,756	23,634	31,512	47,269	78,782
6	1,050	1,313	1,751	2,626	3,501	5,252	7,878	10,504	15,756	21,008	31,513	52,521
8	788	985	1,313	1,970	2,626	3,939	5,909	7,878	11,817	15,756	23,634	39,391
10	630	788	1,050	1,576	2,101	3,151	4,727	6,303	9,454	12,606	18,908	31,513
12	525	656	875	1,313	1,750	2,626	3,939	5,252	7,878	10,504	15,756	26,260
14	450	563	750	1,126	1,501	2,251	3,377	4,502	6,753	9,003	13,505	22,509
16	394	492	656	985	1,313	1,970	2,954	3,939	5,908	7,878	11,817	19,695
18	350	438	583	875	1,167	1,750	2,625	3,501	5,251	7,003	10,504	17,500
20	315	394	525	788	1,050	1,576	2,363	3,151	4,727	6,303	9,454	15,756
30	210	262	350	526	700	1,050	1,577	2,101	3,152	4,202	6,303	10,504
36	175	219	292	437	583	875	1,312	1,750	2,625	3,501	5,251	8,750
40	158	197	262	394	525	788	1,182	1,576	2,364	3,151	4,727	7,878
50	126	158	210	315	420	630	945	1,260	1,890	2,520	3,780	6,302
60	105	131	175	262	350	526	788	1,050	1,576	2,101	3,152	5,252
70	90	112	150	225	300	450	675	900	1,350	1,800	2,700	4,502
80	79	99	131	197	262	394	593	788	1,182	1,576	2,364	3,940
90	70	87	116	175	233	350	525	700	1,050	1,400	2,100	3,500
100	63	77	105	158	210	315	473	630	945	1,260	1,891	3,150
300	21	26	35	53	70	105	158	210	315	420	630	1,050
600	10½	13	18	26	35	53	79	105	158	210	315	525
900	7	9	12	18	23	35	52	70	105	140	210	350
1200	5¼	6½	8¾	13	17½	26	39	53	79	105	158	263
1800	3½	4½	6	9	11⅔	17½	26¼	35	53	70	105	175

Torque for R.P.M.s and H.P.s not listed may be obtained by interpolation, or, by shifting decimal point, or, by the formulae above.

EXAMPLES:

Torque for H.P.s not listed
For 1/20 H.P.—Divide 1.10 H.P. value by 2
For 1/12 H.P.—Divide 1.6 H.P. value by 2
For 15 H.P.—Multiply 5 H.P. value by 3
For 50 H.P.—Multiply 5 H.P. value by 10

Torque at R.P.M.s not listed
200 R.P.M.—100 R.P.M. value divided by 2
400 R.P.M.—100 R.P.M. value divided by 4
400 R.P.M.—40 R.P.M. value divided by 10

6

WINSMITH

ENGINEERING DATA

Winsmith is a member of the American Gear Manufacturers Association and publish AGMA Class I ratings (service factor 1.0). In all sections of this catalog all ratings; horsepower, torque, and overhung load must be divided by the proper service factor or the actual load must be multiplied by the proper service factor.

The following service factor chart is based on an electric or hydraulic prime mover. See page 230 for service factors when using internal combustion engines and explanatory notes covering starting and momentary peak loads, applications involving frequent starting and stopping, high inertia, and reversing loads.

APPLICATION	SERVICE FACTORS		
	UP TO 3 HRS. DAY	3-10 HRS. DAY	OVER 10 HRS. DAY
AGITATORS (Mixers)			
Pure Liquids		1.00	1.25
Liquids and Solids	1.00	1.25	1.50
Liquids - Variable Density	1.00	1.25	1.50
BLOWERS			
Centrifugal		1.00	1.25
Lobe	1.00	1.25	1.50
Vane		1.00	1.25
BREWING AND DISTILLING			
Bottling Machinery		1.00	1.25
Brew Kettles, Continuous Duty		1.00	1.25
Cookers - Continuous Duty		1.00	1.25
Mash Tubs - Continuous Duty		1.00	1.25
Scale Hopper, Frequent Starts	1.00	1.25	1.50
CAN FILLING MACHINES		1.00	1.25
CAR DUMPERS	1.25	1.50	1.75
CAR PULLERS	1.00	1.25	1.50
CLARIFIERS		1.00	1.25
CLASSIFIERS	1.00	1.25	1.50
CLAY WORKING MACHINERY			
Brick Press	1.25	1.50	1.75
Briquette Machine	1.25	1.50	1.75
Pug Mill	1.00	1.25	1.50
COMPACTORS	1.50	1.75	2.00
COMPRESSORS			
Centrifugal		1.00	1.25
Lobe	1.00	1.25	1.50
Reciprocating, Multi-Cylinder	1.00	1.25	1.50
Reciprocating, Single-Cylinder	1.25	1.50	1.75
CONVEYORS - GENERAL PURPOSE			
Uniformly loaded or fed		1.00	1.25
Not uniformly fed	1.00	1.25	1.50
RECIPROCATING OR SHAKER	1.25	1.50	1.75
CRANES			
Dry Dock			
Main Hoist	1.25	1.50	1.75
Auxiliary Hoist	1.25	1.50	1.75
Boom Hoist	1.25	1.50	1.75
Slewing Drive	1.25	1.50	1.75
Traction Drive	1.50	1.50	1.50
Container			
Main Hoist	RF	RF	RF
Boom Hoist	RF	RF	RF
Trolley Drive	RF	RF	RF
(Gantry or Traction Drive)	RF	RF	RF
Mill Duty			
Main Hoist	RF	RF	RF
Auxiliary	RF	RF	RF
Bridge and Trolley Travel	RF	RF	RF
Industrial Duty			
Main	1.00	1.25	1.50
Auxiliary	RF	RF	RF
Bridge and Trolley Travel	RF	RF	RF
CRUSHER			
Stone or Ore	1.50	1.75	2.00
DREDGES			
Cable Reels	1.00	1.25	1.50
Conveyors	1.00	1.25	1.50
Cutter Head Drives	1.25	1.50	1.75
Pumps	1.00	1.25	1.50
Screen Drives	1.25	1.50	1.75
Stackers	1.00	1.25	1.50
Winches	1.00	1.25	1.50

APPLICATION	SERVICE FACTORS		
	UP TO 3 HRS. DAY	3-10 HRS. DAY	OVER 10 HRS. DAY
ELEVATORS			
Bucket	1.00	1.25	1.50
Centrifugal Discharge		1.00	1.25
Escalators		1.00	1.25
Freight		1.25	1.50
Gravity Discharge		1.00	1.25
EXTRUDERS			
General	1.25	1.25	1.25
Plastics			
Variable Speed Drive	1.50	1.50	1.50
Fixed Speed Drive	1.75	1.75	1.75
Rubber			
Continuous Screw Operations	1.50	1.50	1.50
Intermittent Screw Operation	1.75	1.75	1.75
FANS			
Centrifugal		1.00	1.25
Cooling Towers	RF	RF	RF
Forced Draft	1.25	1.25	1.25
Induced Draft	1.00	1.25	1.50
Industrial & Mine	1.00	1.25	1.50
FEEDERS			
Apron		1.25	1.50
Belt	1.00	1.25	1.50
Disc		1.00	1.25
Reciprocating	1.25	1.50	1.75
Screw	1.00	1.25	1.50
FOOD INDUSTRY			
Cereal Cooker		1.00	1.25
Dough Mixer	1.00	1.25	1.50
Meat Grinders	1.00	1.25	1.50
Slicers	1.00	1.25	1.50
GENERATORS AND EXCITERS		1.00	1.25
HAMMER MILLS	1.50	1.50	1.75
HOISTS			
Heavy Duty	1.25	1.50	1.75
Medium Duty	1.00	1.25	1.50
Skip Hoist	1.00	1.25	1.50
LAUNDRY TUMBLERS	1.00	1.25	1.50
LAUNDRY WASHERS	1.25	1.25	1.50
LUMBER INDUSTRY			
Barkers			
Spindle Feet	1.25	1.25	1.50
Main Drive	1.50	1.50	1.50
Conveyors			
Burner	1.25	1.25	1.50
Main or Heavy Duty	1.50	1.50	1.50
Main Log	1.50	1.50	1.75
Re-Saw, Merry-Go-Round	1.25	1.25	1.50
Slab	1.50	1.50	1.75
Transfer	1.25	1.25	1.50
Chains			
Floor	1.50	1.50	1.50
Green	1.50	1.50	1.50
Cut-off Saws			
Chain	1.50	1.50	1.50
Drag	1.50	1.50	1.75
Debarking Drums	1.50	1.50	1.50
Feeds			
Edger	1.25	1.25	1.50
Gang	1.50	1.50	1.50
Trimmer	1.25	1.25	1.50
Log Deck	1.50	1.50	1.50
Log Hauls - Incline - Well Type	1.50	1.50	1.50
Log Turning Devices	1.50	1.50	1.50

ENGINEERING DATA

APPLICATION	SERVICE FACTORS UP TO 3 HRS. DAY	3-10 HRS. DAY	OVER 10 HRS. DAY
LUMBER INDUSTRY (cont.)			
Planer Feed	1.25	1.25	1.50
Planer Tilting Hoists	1.50	1.50	1.50
Rolls - Live-off brg. - Roll Cases	1.50	1.50	1.50
Sorting Table	1.25	1.25	1.50
Tipple Hoist	1.25	1.25	1.50
Transfers			
Chain	1.50	1.50	1.50
Craneway	1.50	1.50	1.50
Tray Drives	1.25	1.25	1.50
Veneer Lathe Drives	RF	RF	RF
METAL MILLS			
Draw Bench Carriage and Main Drive	1.00	1.25	1.50
Runout Tables, Non-reversing			
Group Drives	1.00	1.25	1.50
Individual Drives	1.50	1.50	1.75
Reversing	1.50	1.50	1.75
Slab Pushers	1.25	1.25	1.50
Shears	1.50	1.50	1.75
Wire Drawing	1.00	1.25	1.50
Wire Winding Machine	1.00	1.25	1.50
METAL STRIP PROCESSING MACHINERY			
Bridles	1.25	1.25	1.50
Coilers & Uncoilers	1.00	1.00	1.25
Edge Trimmers	1.00	1.25	1.50
Flatteners	1.00	1.25	1.50
Loopers (Accumulators)	1.00	1.00	1.00
Pinch Rolls	1.00	1.25	1.50
Scrap Choppers	1.00	1.25	1.50
Shears	1.50	1.50	1.75
Slitters	1.00	1.25	1.50
MILLS, ROTARY TYPE			
Ball & Rod			
Spur Ring Gear	1.50	1.50	1.75
Helical Ring Gear	1.50	1.50	1.50
Direct Connected	1.50	1.50	1.75
Cement Kilns	1.50	1.50	1.50
Dryers & Coolers	1.50	1.50	1.50
MIXERS, CONCRETE	1.00	1.25	1.50
PAPER MILLS			
Agitator (Mixer)	1.50	1.50	1.50
Agitator for Pure Liquors	1.25	1.25	1.25
Barking Drums	1.75	1.75	1.75
Barkers - Mechanical	1.75	1.75	1.75
Beater	1.50	1.50	1.50
Breaker Stack	1.25	1.25	1.25
Calender (anti-friction bearings only)	1.25	1.25	1.25
Chipper	1.75	1.75	1.75
Chip Feeder	1.50	1.50	1.50
Coating Rolls	1.25	1.25	1.25
Conveyors			
Chip, Bark, Chemical	1.25	1.25	1.25
Log (including Slab)	1.75	1.75	1.75
Couch Rolls	1.25	1.25	1.25
Cutter	1.75	1.75	1.75
Cylinder Molds	1.25	1.25	1.25
Dryers (anti-friction bearings only)			
Paper Machine	1.25	1.25	1.25
Conveyor Type	1.25	1.25	1.25
Embosser	1.25	1.25	1.25
Extruder	1.50	1.50	1.50
Fourdrinier Rolls (Includes Lumpbreaker, dandy roll, wire turning, and return rolls)	1.25	1.25	1.25
Jordan	1.25	1.25	1.25
Kiln Drive	1.50	1.50	1.50
Mt. Hope Rolls	1.25	1.25	1.25
Paper Rolls	1.25	1.25	1.25
Platter	1.50	1.50	1.50
Presses - Felt & Suction	1.25	1.25	1.25
Pulper	1.50	1.50	1.75
Pumps - Vacuum	1.50	1.50	1.50
Reel (Surface Type)	1.25	1.25	1.50

APPLICATION	SERVICE FACTORS UP TO 3 HRS. DAY	3-10 HRS. DAY	OVER 10 HRS. DAY
PAPER MILLS			
Screens			
Chip	1.50	1.50	1.50
Rotary	1.50	1.50	1.50
Vibrating	1.75	1.75	1.75
Size Press	1.25	1.25	1.25
Super Calender	1.25	1.25	1.25
Thickener (AC Motor)	1.50	1.50	1.50
(DC Motor)	1.25	1.25	1.25
Washer (AC Motor)	1.50	1.50	1.50
(DC Motor)	1.25	1.25	1.25
Wind & Unwind Stand	1.00	1.00	1.00
Winders (Surface Type)	1.25	1.25	1.25
Yankee Dryers (anti-friction bearings only)	1.25	1.25	1.25
PLASTICS INDUSTRY - PRIMARY PROCESSING			
Intensive Internal Mixers			
Batch Mixers	1.75	1.75	1.75
Continuous Mixers	1.50	1.50	1.50
Batch Drop Mill - 2 smooth rolls	1.25	1.25	1.25
Continuous Feed, Holding & Blend Mill	1.25	1.25	1.25
Compounding Mills	1.25	1.25	1.25
Calenders	1.50	1.50	1.50
PLASTICS INDUSTRY - SECONDARY PROCESSING			
Blow Molders	1.50	1.50	1.50
Coating	1.25	1.25	1.25
Film	1.25	1.25	1.25
Pipe	1.25	1.25	1.25
Pre-plasticizers	1.50	1.50	1.50
Rods	1.25	1.25	1.25
Sheet	1.25	1.25	1.25
Tubing	1.25	1.25	1.50
PULLERS - BARGE HAUL	1.00	1.50	1.75
PUMPS			
Centrifugal		1.00	1.25
Proportioning	1.00	1.25	1.50
Reciprocating			
Single Acting, 3 or more cylinders	1.00	1.25	1.50
Double Acting, 2 or more cylinders	1.00	1.25	1.50
Rotary			
Gear Type		1.00	1.25
Lobe		1.00	1.25
Vane		1.00	1.25
RUBBER INDUSTRY			
Intensive Internal Mixers			
Batch Mixers	1.50	1.75	1.75
Continuous Mixers	1.25	1.50	1.50
Mixing Mill - 2 smooth rolls - (If corrugated rolls are used, then use the same service factors that are used for a Cracker-Warmer.)	1.50	1.50	1.50
Batch Drop Mill - 2 smooth rolls	1.50	1.50	1.50
Cracker Warmer - 2 roll; 1 corrugated roll	1.75	1.75	1.75
Cracker Warmer - 2 corrugated rolls	1.75	1.75	1.75
Holding, Feed & Blend Mill - 2 rolls	1.25	1.25	1.25
Refiner - 2 rolls	1.50	1.50	1.50
Calenders	1.50	1.50	1.50
SAND MILLER	1.00	1.25	1.50
SEWAGE DISPOSAL EQUIPMENT			
Bar Screens		1.00	1.25
Chemical Feeders		1.00	1.25
Dewatering Screens	1.00	1.25	1.50
Scum Breakers	1.00	1.25	1.50
Slow or Rapid Mixers	1.00	1.25	1.50
Sludge Collectors	1.00	1.00	1.25
Thickeners	1.00	1.25	1.50
Vacuum Filters	1.00	1.25	1.50
SCREENS			
Air Washing		1.00	1.25
Rotary-Stone or Gravel	1.00	1.25	1.50
Traveling Water Intake		1.00	1.25

6

APPLICATION	SERVICE FACTORS UP TO 3 HRS. DAY	3-10 HRS. DAY	OVER 10 HRS. DAY
SUGAR INDUSTRY			
Beet Slicer	1.50	1.50	1.75
Cane Knives	1.50	1.50	1.50
Crushers	1.50	1.50	1.50
Mills low speed end	1.50	1.50	1.50
TEXTILE INDUSTRY			
Batchers	1.00	1.25	1.50
Calenders	1.00	1.25	1.50
Cards	1.00	1.25	1.50
Dry Cans	1.00	1.25	1.50
Dryers	1.00	1.25	1.50
Dyeing Machinery	1.00	1.25	1.50

APPLICATION	SERVICE FACTORS UP TO 3 HRS. DAY	3-10 HRS. DAY	OVER 10 HRS. DAY
TEXTILE INDUSTRY (cont.)			
Looms	1.00	1.25	1.50
Mangles	1.00	1.25	1.50
Nappers	1.00	1.25	1.50
Pads	1.00	1.25	1.50
Slashers	1.00	1.25	1.50
Soapers	1.00	1.25	1.50
Spinners	1.00	1.25	1.50
Tenter Frames	1.00	1.25	1.50
Washers	1.00	1.25	1.50
Winders	1.00	1.25	1.50

RF = REFER TO FACTORY

EXPLANATORY NOTES:

Time specified for intermittent and occasional service refers to total operating time per day.

Normal starting, or occasional momentary peak loads, two or three times per day, up to 300% of catalog rating at 1800 R.P.M. are permissible. If either of these values are exceeded, a service factor of 1.5 should be used.

Heavy starting loads may be encountered when the Slow Speed Shaft of the reducer is direct coupled to larger gears or heavy masses. A service factor of 2 should be used.

Reversing drives and those subjected to quickly repeated shock loads of unusual or unpredictable intensity; stalling loads, drives that are overrunning, or that "wind up" due to quick power stoppage and storage of energy are not covered by service factors above. A service factor of 3 is recommended. Each is a problem in itself and should be referred to our Engineering Department.

Term "Frequent starts and stops" refers to more than 10-20 starts per hour (see chart below).

Conversion Table to Find Equivalent Service Factor When Using Single or Multi-Cylinder Engines

For A Hydraulic or Electric Motor Service Factor of:	Use this Service Factor For Single Cylinder Engines	Use this Service Factor For Multi-Cylinder Engines
1.00	1.50	1.25
1.25	1.75	1.50
1.50	2.00	1.75
1.75	2.25	2.00
2.00	2.50	2.25

AGMA SERVICE FACTOR CHART BASED ON LOAD CLASSIFICATION

Prime Mover	Duration of Service Per Day	Driven Machine Load Classifications: Uniform	Moderate Shock	Heavy Shock
Electric and Hydraulic Motors (See above chart for internal combustion engines)	Occasional ½ hour	1.00	1.00	1.00
	Less than 3 hours	1.00	1.00	1.25
	3-10 hours	1.00	1.25	1.50
	Over 10 hours	1.25	1.50	1.75

Following Service Factors Apply For Applications Involving Frequent Starts and Stops

Electric and Hydraulic Motors	Occasional ½ hour	1.00	1.00	1.25
	Less than 3 hours	1.00	1.25	1.50
	3-10 hours	1.25	1.50	1.75
	Over 10 hours	1.50	1.75	2.00

EXAMPLES

PROBLEM 1

Required a speed reducer to drive a Conveyor, not uniformly loaded, direct connected by a flexible coupling. The service is for 8 hours per day with moderate shock loading. The conveyor head shaft is to have a speed of 1.2 RPM, approximately and the head shaft sprocket has a pitch diameter of 18 inches. The chain pull is 1400#. An 1800 RPM motor, direct coupled to the high speed shaft of the reducer, is to drive the reducer.

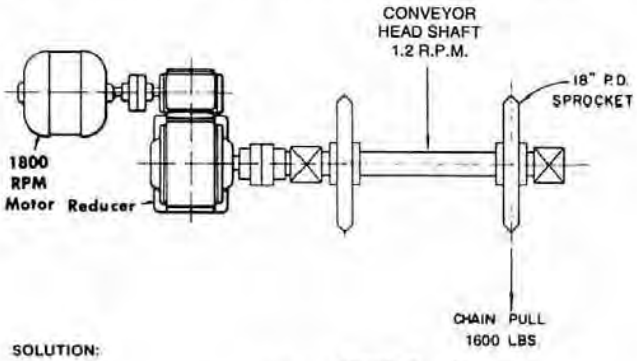

SOLUTION:

The ratio is

$$\text{Ratio} = \frac{\text{Input Speed}}{\text{Output Speed}} = \frac{1800}{1.2} = 1500\text{-}1$$

SERVICE FACTOR

For 8 hour/day, moderate shock load. A.G.M.A. recommend a service factor of 1.25.

The torque load is:

Pull × radius of sprocket × Service Factor = Torque

1600 pounds × 9" × 1.25 = 18,000 inch pounds.

A reducer with a ratio of 1500 to 1, and an output torque of at least 18,000 inch pounds is required. A 10CTD reducer with an output torque of 19,205 inch pounds for an input speed of 1800 rpm was chosen.

PROBLEM 2

Determine the size of worm gear reducer required to drive a conveyor, without shock, continuously according to the figure shown below.

Ratio of Reduction—The head shaft and motor are connected to the reducer by couplings so, therefore, the ratio of reduction is 1000:1

Output Torque—Torque load at head shaft, or at output shaft or reducer is

$$T = W \times R = 1200 \text{ pounds} \times \frac{10'' \text{ dia.}}{2} = 6000 \text{ inch pounds.}$$

The service is non-shock, continuous, with a service factor 1.25, thus a reducer must be chosen with a ratio of 1000 to 1 and an AGMA Class 1 torque of

6000 x 1.25 = 7500 inch pounds.

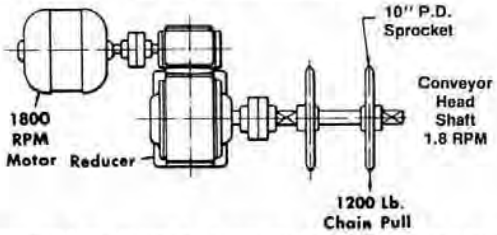

The 8CBD reducer with a ratio of 1000 to 1 is required. Its torque capacity is 8387 inch pounds, which is over the required torque. .47 horsepower is required to drive this reducer for the required load of 6000 inch pounds. A ½ HP motor should be used, but if a larger motor is selected, then it is advisable to use some type of slip coupling to protect the reducer.

ENGINEERING DATA

EFFICIENCY OF WINSMITH REDUCERS

The efficiency of a Worm Gear Speed Reducer is dependent on the lead angle of the worm, input speed to the unit, and the type and temperature of the lubricant.

The values in this catalog have been determined in accordance with A.G.M.A. Specification 6034-A87.

While no efficiencies are listed in the catalog, they may be very easily calculated in the following manner:

$$\text{Efficiency} = \frac{\text{Horsepower Output}}{\text{Horsepower Input}}$$

In order to establish the efficiencies of reducers where only the output torque and input horsepower are given, the output torque is converted to output horsepower by the following formula:

$$\text{Horsepower Output} = \frac{\text{Output Torque} \times \text{RPM Output}}{63{,}025}$$

To determine efficiency of the unit, the horsepower output is divided by horsepower input as is indicated above. The above method should be used to establish the efficiency of the various reducers listed in this catalog.

SELF-LOCKING SPEED REDUCERS

WORM GEAR REDUCERS

A worm gear is said to be self-locking, or irreversible when the gear cannot drive the worm. This condition is obtained, if the lead angle of the worm is less than the friction angle, and as a consequence the efficiency for reversed driving is zero. The friction angle for static conditions will vary with such factors as surface finish, and lubrication. Based upon the generally accepted value of static coefficient of friction equal to 0.15, the friction angle would be approximately 8°. However, the friction angle decreases rapidly with the start of motion, also, vibrations from nearby sources quite often upset the static condition of a locked set of gearing a sufficient amount to reduce the friction angle to a point where motion occurs. These unpredictable factors make it advisable to resort to a brake rather than to rely on the self-locking characteristics of the gearing. A worm gear set has the following SELF-Locking qualities "at rest" or "in motion."

CASE 1—Self-locking of the worm and gear when the load is at Rest may occur with the helix angle as great as 8°. However vibrations from an outside source, or the slightest start of the worm often upsets the static condition of a locked set of gearing a sufficient amount to start motion.

CASE 2—Self-locking of the worm and gear when the load is in motion downward requires that the load being lowered stops after the power is shut off. Worms with a helix angle of 2° or less may be required for this service.

PLANETARY REDUCERS

Planetary reducers are self-locking in the higher ratios. The action is somewhat like that of a self-locking toggle mechanism. As such, if a greater load than the rating of the reducer is applied, say 50% overload, it may be impossible to release it from the high speed end with normal torque. In this case, releasing the load on the slow speed shaft again permits the reducer to operate normally.

For these reasons and for complete assurance of irreversibility, it is advisable to resort to the use of a brake rather than to rely on the self-locking characteristics of the gearing.

OVERDRIVES

In the overdriving of a reducer, the slow speed shaft is the driver, and the high speed shaft is increased in speed. For this type of service there must not be the slightest tendency of the reducer to be self-locking. All applications regarding self-locking or overdrives should be referred to our engineering department for recommendations.

AGMA SUGGEST the following with regard to "self-locking."—For complete assurance of irreversibility, it is advisable to resort to the use of a brake, rather than to rely on self-locking characteristics of the gearing."

BACKLASH—All Winsmith worm gear reducers have a standard minimum backlash of .020" measured at a 3 inch radius. To measure this, hold fixed the worm shaft and rotate the output shaft with a lever arm. Measure movement of arm at 3". (For reduced backlash, consult Winsmith.)

OVERHUNG LOAD

DIRECT CONNECTED REDUCERS

The ideal method of connecting Speed Reducers to other machinery is by means of a suitable flexible coupling. This is equally true with both the high speed and slow speed shaft extensions. In this way overhung loads are avoided, the bearings are not loaded as heavily, and as a result have a longer useful life. When this is not possible, the resulting overhung load must be considered.

MAXIMUM ALLOWABLE OVERHUNG LOADS BASED UPON CHAIN PULL

The printed values given in this catalog are the maximum allowable Overhung Load (or Chain Pull) capacity in pounds and are based upon the use of a Roller Chain Drive. The centerline of the chain pull is calculated at a point one shaft diameter from the housing or mounting flange. These values are limited by the capacity of the bearings or by the size of the shaft, whichever is less. In either case the allowable overhung load will decrease as the center of the load gets farther from the Reducer. Overhung loads are subject to the same service factors that control the capacity of the Reducer and also the overhung load factors.

RELATION OF OVERHUNG LOAD TO TORQUE

With a chain drive the overhung load is equal to the torque divided by the radius of the sprocket. This is because there is practically no pull on the loose side of the chain.

If an overhung gear is used, the load is along the line of action and is greater than that computed from the torque and pitch radius. In this case AGMA recommend that we increase the net overhung load derived from the torque and pitch radius of the gear by the factor 1¼ to obtain the actual overhung load.

When an overhung "V" belt sheave is specified, there is a pull on the loose side of the belt. In this case the sum of the pull on the tight side and on the loose side is the overhung load. To allow for this loose side tension AGMA recommend that the net overhung load derived from the torque be multiplied by 1½.

A FLAT BELT PULLEY requires a tension on the loose side to keep it tight. AGMA therefore recommend that the net overhung load derived from the torque be multiplied by 2½.

Variable speed drives with a flat faced pulley on the Reducer and used with a "V" belt derive their variability by changing the tension in the belt. In this case it is well to use a factor over 2½, possibly as much as 3½.

These factors may be expressed in table form thus:

OVERHUNG LOAD FACTORS

TYPE OF LOAD	Divide Allowable Overhung Load Rating (or Chain Pull) of Reducer by
For Overhung Chain Sprocket	1
For Overhung Gear	1¼
For Overhung "V" Belt	1½
For Overhung Flat Belt	2½
For Overhung Variable Speed Drive	3½

EXAMPLE 1

A fully loaded 1 HP motor running at 1800 RPM is connected to a Reducer by means of a 4" diameter flat face pulley on the motor to an 8" flat face pulley on the Reducer. The service is 24 hours per day with uniform loading. What is the actual overhung load on the Reducer?

The Motor Torque is:

$$T = \frac{63{,}025 \times HP}{N} = \frac{63{,}025 \times 1}{1800} = 35 \text{ inch pounds}$$

The Torque on the Reducer High Speed Shaft is:

$$35 \text{ inch pounds} \times \frac{8'' \text{ pulley}}{4'' \text{ pulley}} = 70 \text{ inch pounds}$$

The Actual Overhung Load on The High Speed Shaft is:

$$\frac{\text{TORQUE}}{\text{RADIUS}} \times \text{FACTOR} = \frac{70}{4''} \times 2\tfrac{1}{2} = 43.8 \text{ pounds}$$

FOR 24-HOUR PER DAY UNIFORM LOADING THE AGMA SERVICE factor is 1.25. We may divide either the allowable overhung load as given in the catalog by 1.25 and compare it with the actual overhung load, or multiply the actual overhung load by 1.25 and apply it directly to that given in the catalog.

$$\begin{aligned}\text{Allowable Overhung Load} &= \text{Actual Overhung Load} \times \text{Service Factor}\\ &= 43.8\# \times 1.25\\ &= 54.7\#\end{aligned}$$

OVERHUNG LOADS

EXAMPLE 2

The output torque of a Reducer is 2,000 inch pounds, and this torque is transmitted through a gear, on the Reducer shaft, with a pitch diameter of 5 inches. What is the actual overhung load?

$$\text{Actual Overhung Load L} = \frac{\text{TORQUE}}{\text{RADIUS}} \times \text{OVERHUNG FACTOR}$$

$$= \frac{2000}{2\tfrac{1}{2}''} \times 1\tfrac{1}{4} = 1000\#$$

LOCATION OF OVERHUNG LOADS

In many cases, the center of the pulley, gear, or sprocket, which determines the location of the overhung load does not coincide with the position one shaft diameter from the housing or mounting flange. In this case, if the location of the overhung load is outside this position, then the allowable overhung load is determined by:

$$L_o = L_c \frac{\ell}{\ell + \Delta\ell}$$

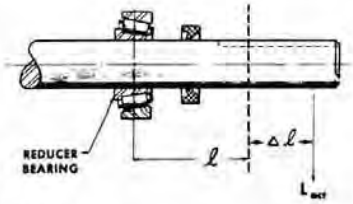

Where

- L_o = **Allowable overhung load in pounds.**
- L_{act} = **Actual overhung load.**
- L_c = **Catalog rating of overhung load in pounds.**
- ℓ = **A factor given in Table 1. (This is the actual distance from the center of the bearing to a point one shaft diameter from the housing or mounting flange.**
- $\Delta\ell$ = **Distance from location of the actual overhung load to a point one shaft diameter from the housing or mounting flange.**

LOCATION OF OVERHUNG LOADS

EXAMPLE 3

Assume that a 7CT Reducer with a nominal ratio of 25 to 1 is subjected to a torque of 2,000 inch pounds on the slow speed shaft. This torque is transmitted through a double chain sprocket of ⅝" pitch 15 teeth. The centerline of the sprocket is 5.5 inches from the center of the Reducer. The service is 24 hours per day, uniform loading.

DATA:

Service Factor	=	1.25
Chain Overhung Load Factor	=	1
Radius of 15 Tooth ⅝" Pitch Chain	=	3.006"/2 = 1.503"
Catalog Overhung Load = L_c	=	1924#
℄ Reducer to End of Shaft = P	=	7.500"
℄ Reducer to a point one shaft diameter from the housing or mounting flange.	=	5.375

$\Delta\ell$ = 5.5" − 5.375" = 0.125"

ℓ = 3.537" (from Table 1, p. 235)

$$\text{Actual Overhung Load} = \frac{\text{TORQUE}}{\text{RADIUS}} \times \text{SERVICE FACTOR} = \frac{2000}{1.503''} \times 1.25 = 1663\#$$

$$\text{Allowable Overhung Load} = L_o = L_c \frac{\ell}{\ell + \Delta\ell} = 1924 \frac{3.537''}{3.537'' + .125} = 1858\#$$

Thus the use of a 15 tooth ⅝" pitch sprocket with the center of the sprocket 5.5" from the center of the Reducer is satisfactory.

USE OF OUTBOARD BEARING

USE OF OUTBOARD BEARING

If the actual overhung load is greater than the allowable overhung load, we may:

1. Move the centerline of the load nearer the Reducer, or—
2. Increase the diameter of the attached pulley, gear or sprocket, or—
3. Provide an outboard bearing—this generally requires a Reducer with a shaft longer than standard.

A way of computing the allowable overhung load with an outboard bearing is as follows:

1. Compute the actual overhung load, L_{act} as previously described.
2. Compute the load on the reducer bearing L_b, and the load on the outboard bearing L_o.

$$L_b = L_{act} \frac{b}{a + b} \; ; \; L_o = L_{act} \frac{a}{a + b}$$

3. L_b should not be greater than the allowable overhung load as given in the catalog.
4. The value of L_o may be used to determine the size of the outboard bearing.

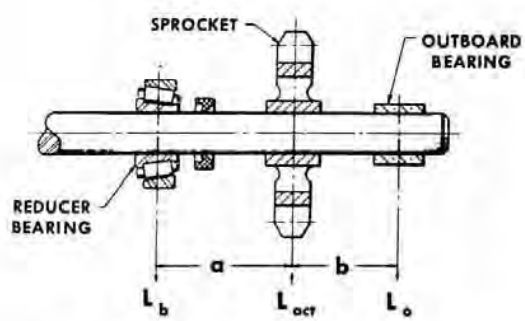

EXAMPLE 4

Given all of the data of Example 3 except that the load is 9 inches from the centerline of the Reducer and that the outboard bearing is 4 inches beyond the load.

$\triangle \ell = 9'' - 5.375'' = 3.625''$ **Distance from location of the actual overhung load to a point one shaft diameter from the housing or mounting flange.**

$a = \ell + \triangle \ell = 3.537'' + 3.625'' = 7.162''$

$b = 4''$

$L_{act} = 1663\#$ (from Example 3)

$$\text{Allowable Overhung Load} = L_o = L_t \times \frac{\ell}{\ell + \triangle \ell} = 1924\# \times \frac{3.537''}{7.162''} = 950\#$$

$$L_b = L_{act} \frac{b}{a+b} = 1663\# \times \frac{4''}{7.162'' + 4''} = 596\#$$

$$L_o = L_{act} \frac{a}{a+b} = 1663\# \times \frac{7.162''}{7.162'' + 4''} = 1067\#$$

$$\text{Check} = L_{act} = 1663\#$$

$L_b = 596\#$, whereas it might have been as high as 1858#

$L_o = 1067\#$. The outboard bearing must be large enough to withstand this load.

HOLLOW SHAFT REDUCERS

The overhung load on the high speed shaft of the shaft mounted reducer is treated as previously described. On the slow speed shaft an assumed location is taken for the overhung load. If the actual load is in a different position, the value of $\triangle \ell$ is determined and the loads are treated as previously described. See Hollow Shaft Section for overhung loads of SF reducers.

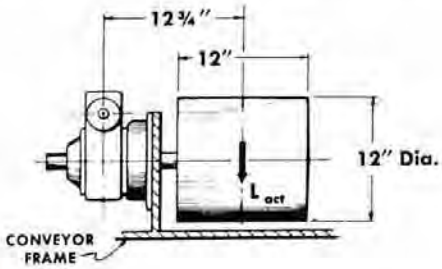

EXAMPLE 5

An 8SF reducer with a ratio of 30 to 1 is mounted to the frame of a conveyor. A shaft through the hollow shaft of the reducer supports a 12" × 12" pulley. The service is 24 hours per day, moderate shock loading. (AGMA service factor 1.5). The location dimensions are as shown. Find the overhung load on the reducer.

The catalog output torque rating for the 8SF reducer, 30 to 1 at 1800 RPM input is 3404 inch pounds for AGMA Class 1 service. Thus

$$\frac{\text{OUTPUT TORQUE}}{\text{SERVICE FACTOR}} = \frac{3404 \text{ inch pounds}}{1.5} = 2269 \text{ inch pounds,}$$

and the corresponding load at the center of the pulley is

$$L_{act} = \frac{\text{Torque}}{\text{Radius of Pulley}} = \frac{2269 \text{ inch pounds}}{6 \text{ inch}} = 378\#$$

The revised L_{act} for flat belts (factor = 2.5) gives

$378\# \times 2.5 = 945\#$ actual overhung load.

The maximum allowable overhung load is obtained from the formula:

$\ell = 6.761''$ (from Table 1, p. 253); $\triangle \ell = 12\frac{3}{4}'' - 8\text{-}3/4'' = 4''$ (from Hollow Shaft Reducer Section)

$$L_o = L_{act} \frac{\ell}{\ell + \triangle \ell} = 3636 \times \frac{6.761}{6.761 + 4} = 2284\# \text{ for Class 1 service}$$

$$\text{AGMA Service Factor } \frac{2284\#}{1.5} = 1523\# \text{ allowable overhung load.}$$

The allowable load is greater than the maximum actual overhung load, thus the arrangement is satisfactory. Note: There is no mention of the size of shaft. It should be large enough to take the load and deflection.

EXAMPLE 6

An 8S reducer, ratio 30 to 1, is equipped with a standard foot mounted "CB" housing (model designation, 8SCB) and used for one support of a 8" x 18" pulley. The service is 24 hours per day operation, non shock loading. (Service Factor 1.25). The location dimensions are shown on the sketch. Find the overhung load on the reducer and determine the bearing loads.

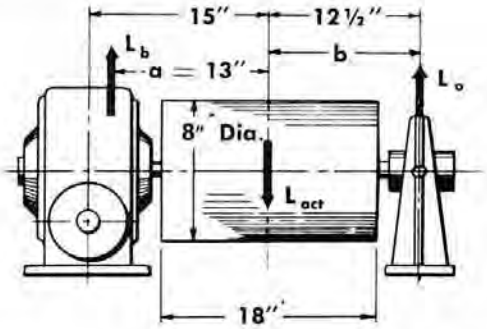

The catalog output torque rating for the 8SCB reducer, 30 to 1 @ 1800 RPM input speed is—

$$\frac{\text{Output torque}}{\text{Service factor}} = \frac{3404 \text{ inch pounds}}{1.25} = 2723 \text{ In. Lbs.}$$

and the corresponding overhung load at the center of the pulley is

$$L_{act} = \frac{\text{Torque}}{\text{Radius of pulley}} = \frac{2723}{4} = 680\#$$

$a = 15'' - 8\text{-}3/4''$ (from Hollow Shaft Reducer Section) $+ 6.761''$ (ℓ from Table 1, p. 235) $= 13$;

$b = 12\frac{1}{2}''$

From the formulae

$$L_b = L_{act} \frac{b}{a+b} = 680 \times \frac{12.5}{13 + 12.5} = 334\# \text{ load on reducer bearings}$$

$$L_o = L_{act} \frac{a}{a+b} = 680 \times \frac{13}{13 + 12.5} = 346\# \text{ load on outboard bearing}$$

Check 680#

The revised rating for flat belts (factor = 2.5) gives

$334\# \times 2.5 = 835\#$ load on reducer bearing

$346\# \times 2.5 = 865\#$ load on outboard bearing

The allowable overhung load given in the catalog is

$$\frac{3636\#}{1.25 \text{ (Service Factor)}} = 2909\#. \text{ The margin of safety is } \frac{2909}{835} = 3.48$$

(A margin of 1 would be satisfactory.)

A check might be made to determine whether an outboard bearing is necessary. In this case

$L_{act} = 680 \times 2.5$ (Belt factor) $= 1700\#$

$L_t = 3636/1.25$ (Service factor) $= 2909$

$\ell = 6.761$ (from Table 1, p. 235)

$\triangle \ell = 15'' - 8\text{-}3/4'' = 6\text{-}1/4''$ from Shaft Mounted Reducer Section

$$L_o = L_t \frac{\ell}{\ell + \triangle \ell} = 2909 \frac{6.761}{6.761 + 6.25} = 1513\# \text{ Allowable load}$$

The allowable load (1513) is less than the actual load (1700), thus an outboard bearing is desirable.

TABLE 1. Values of ℓ for Winsmith "C" Series and "DBI" Series Speed Reducers

	HIGH SPEED SHAFT					SLOW SPEED SHAFT			
REDUCER NUMBER	CB-CT-CV FCT-FCV	CBX-CTX CVX	CBD-CTD CVD	DBI	CTT-CVT	CB-CT-CBX-CTX-CBD-CTD CTT-MCB-MCT-MCTD-FCT MCTT-MFCB-MFCT	DBI	CV-CVX-CVD-CVT MCV-MCVD-MCVT FCV-MFCV TOP EXTENSION	CV-CVX-CVD-CVT MCV-MCVD-MCVT FCV-MVCV BOTTOM EXTENSION
1	1.528			1.781		1.658	1.782	1.658	1.908
2	1.916		1.528	2.037		1.983	2.297	1.983	2.117
3	1.916		1.528	2.670		2.104	2.531	2.104	2.244
4	2.064		1.528	2.662		2.270	2.656	2.270	2.531
4½				2.662			2.985		
5	2.333	2.114	1.916	2.662	1.528	2.785	2.985	2.785	2.925
6	2.733	2.114	1.916	4.060	1.528	3.061	3.312	3.061	3.253
7	2.769	2.114	2.064		1.528	3.537		3.537	3.790
8	2.881	2.114	2.064	4.060	1.528	3.538	3.906	3.538	3.713
9	3.194	2.114	2.064	4.060	1.528	3.743	5.907	3.743	3.940
10	3.071	2.594	2.333		1.916	4.133		4.133	4.393
11	3.055	2.594	2.333		1.916	4.383		4.383	4.580
12	3.360	2.594	2.733		1.916	4.639		4.639	4.893
13	3.360	2.594	2.733		1.916	5.095		5.095	5.355
14	3.914	2.594	2.769		2.064	5.813		5.813	6.020
15	4.210		3.194		2.064	6.439		6.439	6.703

TABLE 2. Values of ℓ for Winsmith Hollow Shaft ("S" Series) and Drop Bearing ("L" Series) Speed Reducers

	HIGH SPEED SHAFT				SLOW SPEED SHAFT	
REDUCER NUMBER	ST-SF-FSF FST-L	STD-SFD LD	STT-SFT	LX	ST-SF-FSF-FST-MSF-MST-SFD STD-MSFD-MSTD-SFT-STT-MFSF MFST-MSFT-MSTT	L-LD-LX-ML-MLD
3	1.916	1.528			3.660	
4	2.064	1.528			4.075	2.445
5	2.335	1.916		2.114	5.576	3.015
6	2.733	1.916	1.528	2.114	5.228	3.211
7	2.769	2.064	1.528	2.114	7.213	3.278
8	2.881	2.064	1.528	2.114	6.761	3.663
9	3.194	2.064	1.528	2.114	8.340	4.185
10	3.071	2.335	1.916	2.594	8.840	4.758
12	3.360	2.733	1.916	2.594	9.350	5.391

TABLE 3. Values of ℓ for Wingear Speed Reducers

	HIGH SPEED SHAFT	SLOW SPEED SHAFT
REDUCER NUMBER	NONMOTORIZED	NONMOTORIZED & MOTORIZED
133 W	1.250	1.562
175 W	1.580	1.893
200 W	1.580	1.893
237 W	2.085	2.378
263 W	2.085	2.378
300 W	2.705	2.498

TABLE 4. Values of ℓ for Winsmith Reducers—Planetary Series

REDUCER NUMBER	HIGH SPEED SHAFT	SLOW SPEED SHAFT	REDUCER NUMBER	HIGH SPEED SHAFT	SLOW SPEED SHAFT	REDUCER NUMBER	HIGH SPEED SHAFT	SLOW SPEED SHAFT	REDUCER NUMBER	HIGH SPEED SHAFT	SLOW SPEED SHAFT
1H	1.655	2.335	1F	1.655	2.335	1VM	1.655	2.335	1R	1.655	2.254
7H	1.862	2.166	7F	1.833	3.053	7VM	1.833	3.053	10R	1.833	2.322
11H	2.053	3.266	10F	1.833	3.244	10VM	1.833	3.244	20R	1.333	2.322
21H	2.270	3.485	20F	2.672	3.962	20VM	2.672	3.969	30R	2.282	2.938
31H	2.591	3.769	30F	2.828	4.579	30VM	2.828	4.579	40R	3.086	3.250
41H	3.008	4.511	40F	3.118	5.531	40VM	3.118	5.531	50R	3.672	3.922
51H	3.157	5.219	50F	3.672	6.313	50VM	3.672	6.313			
61H	3.595	6.813	60F	4.344	6.688	60VM	4.344	6.688			

TEMPERATURE—OPERATING
An occasional temperature rise to 225°F. during the hottest part of the day, three to four hours, is not unusual where the ambient is 100°-125°F. For such conditions the oil should be changed more frequently than is normally recommended. (A.G.M.A. allows 100°F. over ambient, with 200°F. as a continuous maximum.)

LUBRICATION
For complete detailed information on installation and lubrication—request copy of our engineering service bulletin entitled "Suggestions for Installation & Lubrication" which includes lubrication recommendation chart. All Winsmith Reducers are filled to the proper level with the correct lubricant when they leave the factory.

6

WINSMITH

ENGINEERING DATA

MISCELLANEOUS ELECTRICAL FORMULAS

Ohms Law:

Ohms = Volts / Amperes
Amperes = Volts / Ohms
Volts = Amperes × Ohms

Power—A.C. Circuits:

$$\text{Power Factor} = \frac{\text{Watts}}{\text{Volts} \times \text{Amperes}}$$

$$\text{Three Phase Kilowatts} = \frac{\text{Volts} \times \text{Amperes} \times \text{Power Factor} \times 1.732}{1000}$$

$$\text{Three Phase Volt-Amperes} = \text{Volts} \times \text{Amperes} \times 1.732$$

$$\text{Three Phase Amperes} = \frac{746 \times \text{Horsepower}}{1.732 \times \text{Volts} \times \text{Efficiency} \times \text{Power Factor}}$$

$$\text{Single Phase Kilowatts} = \frac{\text{Volts} \times \text{Amperes} \times \text{Power Factor}}{1000}$$

$$\text{Single Phase Amperes} = \frac{746 \times \text{Horsepower}}{\text{Volts} \times \text{Efficiency} \times \text{Power Factor}}$$

Power—D.C. Circuits:

Watts = Volts × Amperes

$$\text{Amperes} = \frac{\text{Watts}}{\text{Volts}}$$

$$\text{Horsepower} = \frac{\text{Volts} \times \text{Amperes} \times \text{Efficiency}}{746}$$

Motor Application Formulas:

$$\text{Torque (lb.-ft.)} = \frac{\text{Horsepower} \times 5250}{\text{RPM}}$$

For Pumps:

$$\text{Horsepower} = \frac{\text{GPM} \times \text{head in feet}}{3960 \times \text{efficiency of pump}}$$

For Fans and Blowers:

$$\text{Horsepower} = \frac{\text{GPM} \times \text{head in feet} \times \text{specific gravity}}{3960 \times \text{efficiency of pump}}$$

Speed:

$$\text{Synchronous RPM} = \frac{\text{Hertz} \times 120}{\text{Poles}}$$

$$\text{Percent Slip} = \frac{\text{Synchronous RPM} - \text{Full Load RPM}}{\text{Synchronous RPM}} \times 100$$

TERMINAL MARKINGS & CONNECTIONS

CONNECTIONS FOR NINE LEAD, THREE PHASE MOTORS

STAR CONNECTED

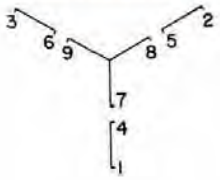

Voltage	Line 1	Line 2	Line 3	Together
Low	1 & 7	2 & 8	3 & 9	4&5&6
High	1	2	3	4&7,5&8,6&9

DELTA CONNECTED

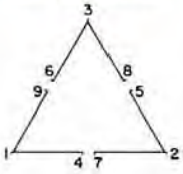

Voltage	Line 1	Line 2	Line 3	Together
Low	1&6&7	2&4&8	3&5&9	None
High	1	2	3	4&7,5&8,6&9

TERMINAL MARKINGS FOR D.C. MOTORS

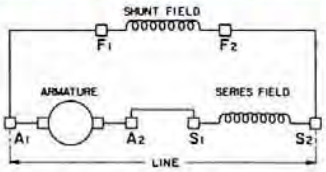

CCW ROTATION

For CW rotation interchange A_1 to A_2

APPLICATION DATA CHECKLIST

WINSMITH APPLICATION DATA CHECKLIST FOR SELECTING SPEED REDUCERS AND GEARMOTORS

REP._____ CUSTOMER_____ DATE_____

A. Reducer Particulars:

1. Size_____ 2. Model_____ 3. Ratio_____ 4. Assy._____ 5. Exact Mounting (if not clear, send sketch)

Critical dimensions_____

B. Drive Systems:

1. How is prime mover connected to unit?_____
2. How is the unit connected to the load?_____
3. List all pertinent data on pulleys, sprockets, drums, etc._____
4. List speed requirements (input, output, variation, conveyor velocities.)_____

C. Load on Reducer:

1. Output torque required_____(or)
2. Reasonable estimate of torque_____(or)
3. List data to calculate output torque_____
4. If loads are in terms of weight, list materials rubbing, sliding or rolling against each other so coefficient of friction can be estimated._____
5. Are there any large inertia forces that must be overcome in starting system? If so, explain:_____
6. Overhung loads subjected to unit_____
7. Thrust loads subjected to unit_____

D. Type of Service:

1. Uniform_____, Moderate_____, Shock_____, reversing_____, and/or impact_____loading.
2. Extent of peak loads_____
3. Type of prime mover_____
4. Kind of machinery used on_____
5. Unusual dangers to persons that must be considered_____

E. Duty:

1. Length of daily service_____
2. Cycle time_____
3. Does (2) reflect frequent starts & stops?_____

F. Environmental Conditions:

1. Ambient temperature range_____
2. Is unit for outdoor service?_____
3. Atmospheric condition of surroundings (dirty air, etc.)_____
4. List any unusual conditions that the unit is subjected to (heat, water splash, etc.)_____

G. Prime Mover:

1. Capacity (speed & HP or torque)_____
2. Frame size_____(Can the reducer accept this size?)
3. Obtain certified prints for non-nema mounting dimensions._____
4. Is it constant torque or HP for varying speeds?_____
5. For internal combustion: no. cylinders_____, cycles_____

H. Self-Locking:

1. Must the unit backdrive?_____
2. Must the unit be self-locking?_____(If so, a brake is recommended.)

I. Torque Control:

1. What torque settings are required?_____ Alarm_____ Shutoff_____
2. When viewing end of slow speed shaft, what is its direction?_____ CW_____(or) CCW_____

UNUSUAL CONDITIONS CONCERNING INSTALLATION OR APPLICATION

WINSMITH

6

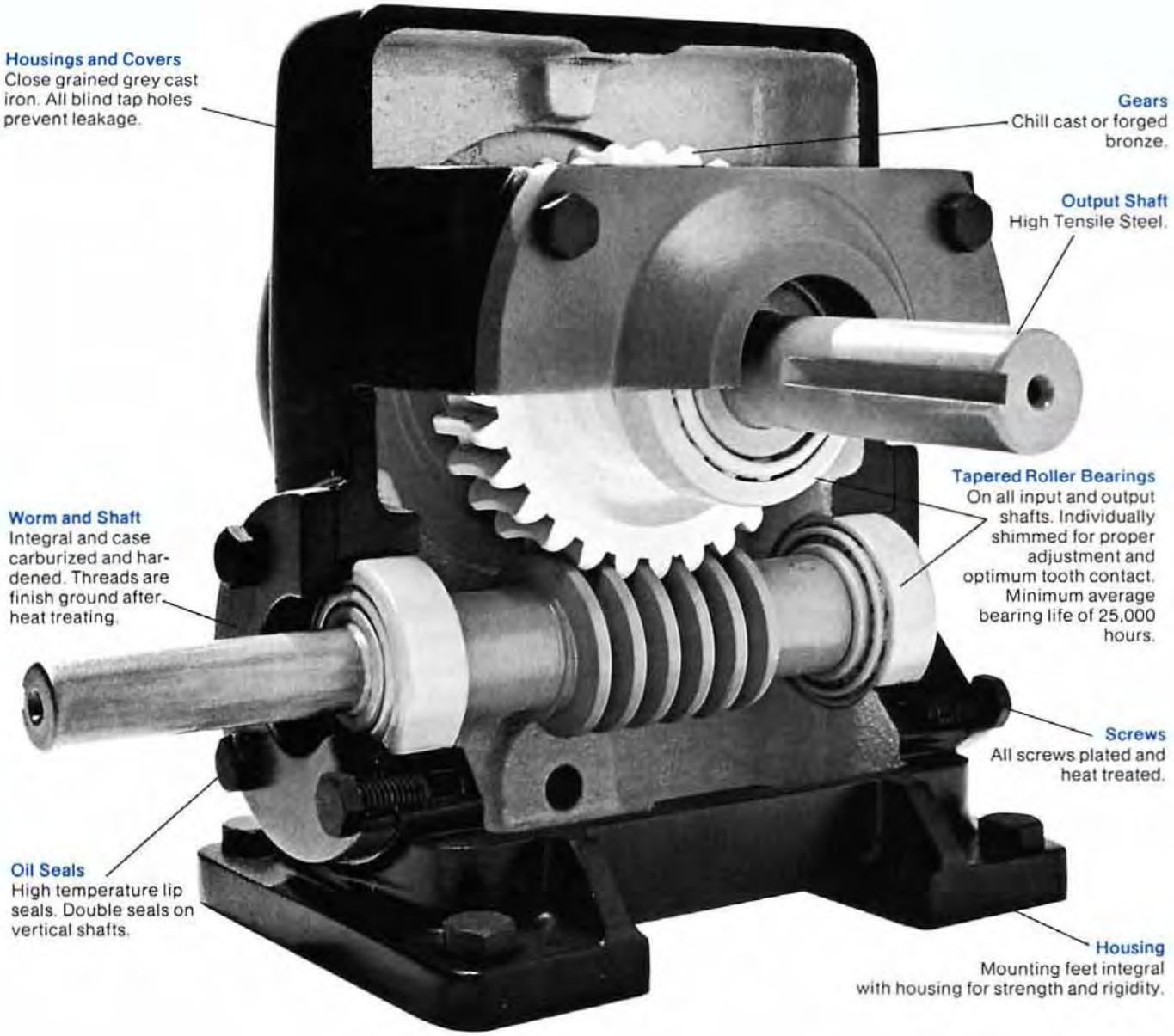

What to look for in a Worm Gear Speed Reducer

There are 49 basic designs of Winsmith "C" Series worm gear reducers.

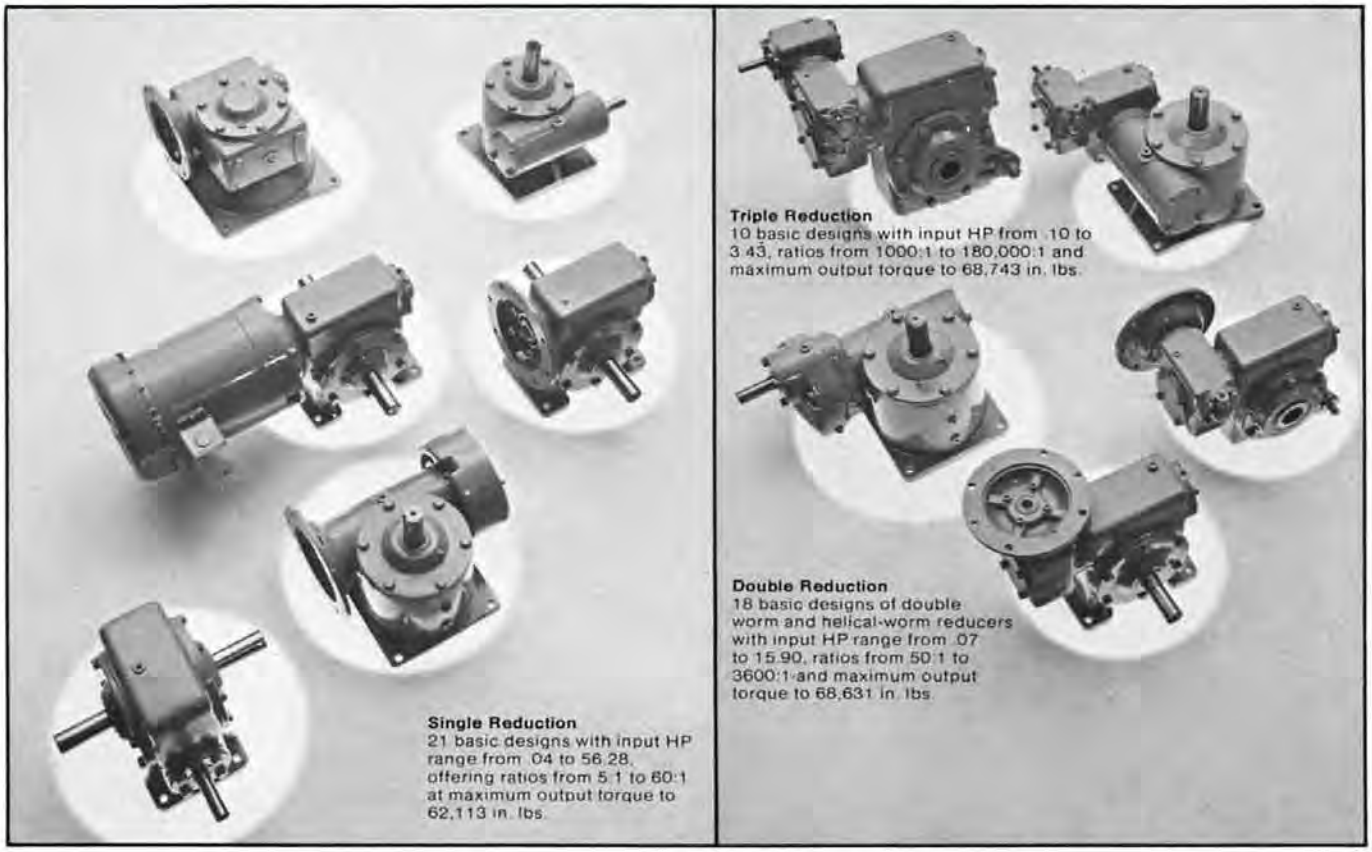

Once you've settled on a worm gear reducer, the next step is finding exactly the right reducer for your application . . . hopefully a *standard* reducer that does the job at *standard* prices. That's no easy job. As a matter of fact, it's one of the major reasons Winsmith reducer sales have more than doubled in the past five years.

We not only make a great reducer—just check the "inside" story opposite—but we offer thirteen million standard worm gear reducers in 49 basic designs. We've never found any other way to be sure of matching every application precisely without having to charge custom prices. But it isn't an easy task. We keep a large inventory of each of the 7,000 basic gears, shafts, housings and other component parts on hand at all times in order to assemble whichever of our thirteen million reducers best fits your need. It takes 256 catalog pages to describe the line and aid in selecting the right reducer.

We manufacture the very best reducers modern materials and technology permit.

And no wonder! At Winsmith we concentrate *all* of our energies on speed reducers. It's the one thing we do better than anyone else in the world.

WINSMITH
PEERLESS·WINSMITH, INC.

TERMS AND CONDITIONS

TERMS AND CONDITIONS OF SALE

THE RECIPIENT OF THIS OFFER IS HEREIN CALLED BUYER AND PEERLESS-WINSMITH, INC. IS HEREIN CALLED SELLER. THE TERM PRODUCT SHALL INCLUDE, WITHOUT LIMITATION, GOODS, SERVICES, WORK AND DATA, EXPRESSLY OR IMPLIEDLY DELIVERED HEREUNDER AND ANY PART THEREOF.

1. CONTROLLING TERMS

The parties agree that there are no understandings, agreements or representations, express or implied, not specified herein, respecting this offer or sale, and that this instrument contains the entire agreement between Seller and Buyer. No course of prior dealing and no usage of the trade shall be relevant to supplement or to explain terms used in this agreement. All sales are expressly limited to, and the rights and liabilities of the parties shall be governed exclusively by, the terms and conditions herein. In the event any purchase order or offer from Buyer states terms additional to or different from those set forth herein, this document shall be deemed a notice of objection to such additional or different terms and a rejection thereof. Any acknowledgement or shipment of product by Seller to Buyer subsequent to Seller's receipt of a purchase order or offer from Buyer shall not be deemed to be an acceptance by Seller of an offer to contract on the basis of any Buyer's terms and conditions. Issuance of a purchase order or acceptance by Buyer of products shall be conclusive evidence of Buyer's acceptance of terms and conditions set forth herein as the sole controlling terms and conditions of the contract between Seller and Buyer.

2. FORCE MAJEUR

This order is accepted subject to delays due to conditions or forces beyond Seller's control including, but not limited to strikes, work stoppages, break down, fires, accidents, contingencies of transportation, storage or delivery, civil disturbances, shortage of labor and acts of God.

3. CREDIT

Buyer agrees to comply with the credit terms and accept deliveries as indicated; upon violation or default by Buyer, or upon bankruptcy or insolvency of Buyer, or by reason of the insecurity of Seller as to the ultimate collectibility of the purchase price as determined by Seller in its sole and unfettered discretion, Seller may, without notice to Buyer, delay or postpone the delivery of the Products; and Seller, at its option, is authorized to change the terms of payment to payment in full in advance of shipment of the entire undelivered balance of said Products. In the event of default by Buyer in the payment of the purchase price or otherwise, Seller after demand, may sell any undelivered Products on hand for the account of Buyer and apply such proceeds as a credit against the contract purchase price, and Buyer agrees to pay balance then due to Seller on demand. Such balance shall bear interest at the highest legal contract rate from the date of demand. Buyer agrees to pay all expenses, including but not limited to, storage and shipment costs, court costs, attorney's fees and other expenses of litigation or preparation therefore, resulting from any default by Buyer in any of the terms thereof. Should Buyer default hereunder prior to the manufacture of all Products ordered hereunder, Buyer agrees to pay as liquidated damages the contract price for such unproduced or partially produced Products, less Seller's then unexpended standard costs for materials, direct labor and variable overhead with respect to the Products as in effect at the time of default. Certification of such standard costs by Seller's independent public accountants shall be conclusive on the parties hereto.

4. CHANGES

Orders arising hereunder may be amended by written Change Order signed by the parties, setting forth the particular changes to be made and the effect of such changes on the price and time of delivery. A charge will be made for changes in drawings and/or specifications after Buyer and Seller have previously agreed upon same. The total charge for such change will include order repossessing costs, additional material and labor costs. Seller will advise the total charge for such changes after receipt of written authorization or direction for such changes. In the event the changes are required as a result of an error on the part of the Seller, no charge will be made.

5. FAIR LABOR STANDARDS ACT

Seller hereby certifies that the Products covered by this order were produced in compliance with the Fair Labor Standards Act of 1938, as amended, and of regulations and orders issued thereunder.

6. TAXES

All applicable taxes of every kind or nature now or hereafter assessed which are or may become effective before this order is completed may be added to the invoice price.

7. BUYER'S REPRESENTATIONS AND INDEMNITY

Buyer represents and warrants that all trademarks, copyright materials, and patents submitted in connection with this order and that the use thereof in accordance with this order will not violate any federal, state or municipal law or regulation, and Buyer agrees to indemnify and hold harmless Seller, its agents, successors and assigns against any suits, loss, claim, demand, liabilities, costs and expenses (including attorneys' fees) arising out of any breach or alleged breach hereof.

8. TERMS

All Sales are made F.O.B. Seller's plant, unless otherwise specified on the face of the Seller's acknowledgement. Payment terms are net 30 days unless otherwise specified on the face of the Seller's acknowledgement. Delivery of all or any part of the Products to a carrier for shipment to Buyer or to a consignee designated by Buyer shall constitute delivery to Buyer and shall pass and vest title to and risk of loss of such goods to Buyer in the event of loss or damage to Products after delivery to a carrier. Seller will, upon request of Buyer, assist in filing claims against the carrier.

9. CANCELLATION-SUSPENSION

Orders for Products received by Seller are accepted subject to the understanding that orders may be cancelled by Seller because of Seller's inability to obtain all or part of the materials necessary to complete the order at prices in effect on the date hereof or by reason of other causes beyond its reasonable control. Cancellation or suspension of orders may be made only upon Sellers written approval. A charge will be made for cancellations and/or suspensions after Buyer and Seller have previously agreed upon same. Seller will advise the total charge for such cancellations and/or suspensions. Buyer agrees to pay such charges, including but not limited to, storage and shipment costs, costs of producing non-standard components, costs of purchasing non-returnable materials, cancellation costs imposed on the Seller by its suppliers, engineering costs and any other costs resulting from cancellation and/or suspension of orders by the Buyer. Certification of such costs by Seller's independent public accountants shall be conclusive on the parties hereto.

10. TOOLS, DIES AND MOLDS

Any and all equipment, including tools, jigs, dies, plates, molds, fixtures, materials, equipment, drawings, designs and other information, which Seller uses, constructs or acquires for Buyer for the purpose of filling this order shall be and remain Seller's property.

11. DELIVERY

Buyer agrees to accept delivery of all goods included in this order within the time specified on the face hereof. No extension of the delivery period shall relieve Buyer from the obligation to accept the goods included in this order. Partial shipment of goods will be made by Seller when ready and invoiced.

12. CLAIMS OR RETURNS

All claims must be made in writing and delivered to Seller within ten (10) days after receipt of the goods and must be accompanied by Seller's packing list and freight bill. Failure of Buyer to make such claims within ten (10) days will constitute a waiver by Buyer or such claims.

In the event of the receipt of notice of such claims, Seller agrees to forward definitive shipping instructions to Buyer or to send a representative of Seller to Buyer's facilities to review shipment and make any necessary adjustments. No return of the goods pursuant to this paragraph shall be made for any purpose without the prior written consent of Seller. Transportation charges on all goods returned after receipt of Seller's Authorization must be prepaid. Any goods returned by Buyer without Seller's consent shall be held for the account of Buyer.

13. CHARGES

Past due accounts are subject to late payment charges of 1½% per month or such lesser amounts are legally permissible.

14. SOLVENCY

Buyer, by these presents and the acceptance of the Products, represents and warrants that Buyer is solvent and able to pay for the Products in accordance with the terms of sale.

15. WARRANTIES

The Products manufactured by Seller are warranted by Seller as follows: (a) Seller has the right to sell the Products, (b) Buyer and its customers shall have the right to enjoy the Products free of claims of third persons against the Seller, and (c) the Products shall be free from manufacturing defects in material and workmanship under normal use and service for a period of twenty-four (24) months from date of shipment. This warranty does not apply to any Products which have been tampered with, improperly stored, exposed to heat or moisture or otherwise subject to misuse or abuse.

THE FOREGOING WARRANTIES ARE IN LIEU OF ALL OTHER WARRANTIES EXPRESS OR IMPLIED INCLUDING, WITHOUT LIMITATION, WARRANTIES OR MERCHANTABILITY AND FITNESS FOR ANY PARTICULAR PURPOSE.

Except as otherwise agreed in writing in each specific instance, the obligation of Seller is limited: (i) in the case of any material breach of the warranties set forth in subparagraphs (a) and (b) above, to the reimbursement of the price paid by Buyer or its customer for such Products; and (ii) in the case of any breach of the warranty set forth in subparagraph (c) above, to any of the following (at Seller's option): refund of the purchase price or repair or replacement of any such defective Product without charge other than for transportation.

SELLER SHALL NOT IN ANY EVENT BE LIABLE FOR INCIDENTAL, CONSEQUENTIAL OR SPECIAL DAMAGES resulting from any use or failure of the Products, including, without limitation, liability for loss of time to, profits or products of, Buyer or the user for any labor or any other expense, damage or loss occasioned by any such defect.

Simultaneously with the delivery by Dealer to its customer of any Products purchased by Buyer from Seller, Buyer shall deliver therewith such printed warranties and disclaimers of warranties in respect to said merchandise as shall be furnished by Seller to Buyer or packed with said merchandise for that purpose. Buyer further agrees that the obligations of Seller to Buyer with respect to all Products purchased by Buyer from Seller shall be as hereinabove set forth. In no event shall Seller's obligation for breach of warranty exceed the purchase price of product.

16. ARBITRATION

Any controversy arising under, or in any way related to this order or the subject matter hereof shall be settled by arbitration by three disinterested arbitrators in the City and State of New York, and under the laws of said State, in accordance with rules of the American Arbitration Association then obtaining. All costs of such arbitration, and any proceedings directly or indirectly related thereto, including reasonable attorney's fees, shall be paid by the party against whom the arbitrators shall render their award or as otherwise directed by the arbitrators.

17. LAW

The contract shall be governed and construed under the State where the products are manufactured.

WINSMITH DISTRICT OFFICES

ALABAMA
See Georgia

CALIFORNIA
Los Angeles (Santa Fe Springs)
■ **Service Center**
562/404-0304
FAX 562/404-8060
San Francisco
(Brentwood)
925/634-2818
FAX 925/634-4314

COLORADO
Lakewood
303/205-1922
FAX 303/205-1477

FLORIDA
Clermont
352/243-7517
FAX 352/243-7518

GEORGIA
Atlanta (Alpharetta)
770/772-7270
FAX 770/772-7277

ILLINOIS
Chicago (Downers Grove)
■ **Service Center**
630/629-3434
FAX 630/629-1010

INDIANA
See Cincinnati, OH

KANSAS
Kansas City
816/524-2010
FAX 816/524-2944

KENTUCKY
See Cincinnati, OH

MASSACHUSETTS
See Rhode Island

MICHIGAN
Detroit
734/878-9050
FAX 734/878-9051

MINNESOTA
Plymouth
763/559-1021
FAX 763/559-6552

MISSOURI
Kansas City
816/524-2010
FAX 816/524-2944
St. Louis
314/576-1488
FAX 314/576-0433

NEW JERSEY
See Philadelphia, PA

NEW YORK
Springville (Factory)
Peerless-Winsmith
716/592-9310
FAX 716/592-9546

NEW YORK (cont.)
New York City
See Philadelphia, PA

NORTH CAROLINA
See Georgia

OHIO
Cleveland (Wickliffe)
440/585-2121
FAX 440/585-2122
Cincinnati
513/791-5009
FAX 513/791-4717

OKLAHOMA
See Texas

OREGON
Portland
■ **Service Center**
503/227-6638
FAX 503/227-5413

PENNSYLVANIA
Harrisburg/Philadelphia
Sales Office
315/684-3553
Fax 315/684-3562
Western PA
Sales Office
716/751-0134
FAX 716/751-4051

RHODE ISLAND
Warwick
401/732-4570
FAX 401/732-4583

SOUTH CAROLINA
See Georgia

TENNESSEE
See Georgia

TEXAS
Dallas/Houston
■ **Service Center**
1-800/383-5918
FAX 877/867-5386

UTAH
See Colorado

VIRGINIA
Vinton
540/890-7756
FAX 540/890-7855

WISCONSIN
Cedarburg
262/375-4465
FAX 262/375-4175

BRITISH COLUMBIA
See Springville, NY

ONTARIO
Toronto (Mississauga)
■ **Service Center**
905/828-1222
FAX 905/828-1225

WINSMITH SERVICE CENTERS

WINSMITH®'s Regional Service Centers, shown on the map, can provide prompt solutions to your unique delivery requirements. Each Service Center is fully stocked with the necessary components and assemblies to provide a wide variety of finished units with the same high quality that you expect from WINSMITH's manufacturing plants.

3/04

WINSMITH

HBD Industries Inc. and its subsidiaries cannot accept responsibility for possible errors in catalogues, brochures, other printed materials, and website information, and may change, delete, add to or otherwise modify such information without notice. HBD reserves the right to alter its products without notice, including products already on order, provided that such alteration can be made without changes being necessary in specifications already agreed to. All trademarks in this material are the property of the HBD Industries Inc., or its subsidiaries. The HBD and HBD brands logotype, are trademarks of HBD Industries Inc. All rights reserved.

DISTRIBUTED BY:

HBD/WINSMITH, INC.
172 EATON STREET
SPRINGVILLE, NY
14141-1197 USA
TEL: 1 (716) 592-9310
TEL: 1 (716) 592-9546
www.winsmith.com